EBARA

Japanese Technology since 1912

Submersible electric Pumps

60Hz Product Catalogue

EBARA

Japanese Technology since 1912

www.ebaraeurope.com

We have simply thought of everything

Our range of submersed pumps has been designed to meet all needs related to the pumping, treatment and movement of waste waters and clear waters, and in all situations in which the water used contains solid residues.
The different types of submersed pumps, linked to the wide range of accessories available, ensure high performance and versatility of use.
The emptying of wells, garages and cellars or the lifting of rain/waste waters, industrial applications and irrigation of gardens and orchards require different technical and construction characteristics. Our submersed pumps offer the most suitable technical solutions for different needs ensuring the best possible performance for the specific application and ensuring high reliability of operation.

The flexibility and manageability of the smaller models allows their use in fixed or mobile applications. The vortex impellers, single or semi-open, those equipped with a cutter and those with a grinder-type shredder allows the treatment black water with the presence of solid or filamentous substances.

The accessories available for the different models, such as the magnetic float for clear water or the minimum suction device up to 3 mm allow completion of the functions of the pumps increasingly adapting to the demands of different uses.

RELIABILITY

VERSATILITY AND FLEXIBILITY

FREE PASSAGE OF SOLIDS

HIGH EFFICIENCY

Sectors and Areas of Application

- **Emptying of wells, garages and cellars**
  For the emptying of domestic premises subject to flooding or water infiltrations.
- **Emptying of tanks and cisterns**
  For aspiration from water recovery systems
- **Handling of load liquids of solid or filamentous substances in suspension**
  For the drainage of sludge with solid or filamentous particles
- **Civil and industrial waste water evacuation**
  For the drainage of discharges of residential or industrial uses
- **Drainage of sublevel areas**
  For the extraction of water from lower level areas
- **Emptying of cesspools**
  For the emptying residential and industrial sewage systems
- **The lifting of rainwater**
  For movement of the water contained in rainwater recovery tanks
- **Irrigation of gardens and vegetable gardens**
  For gardening and small-scale agriculture

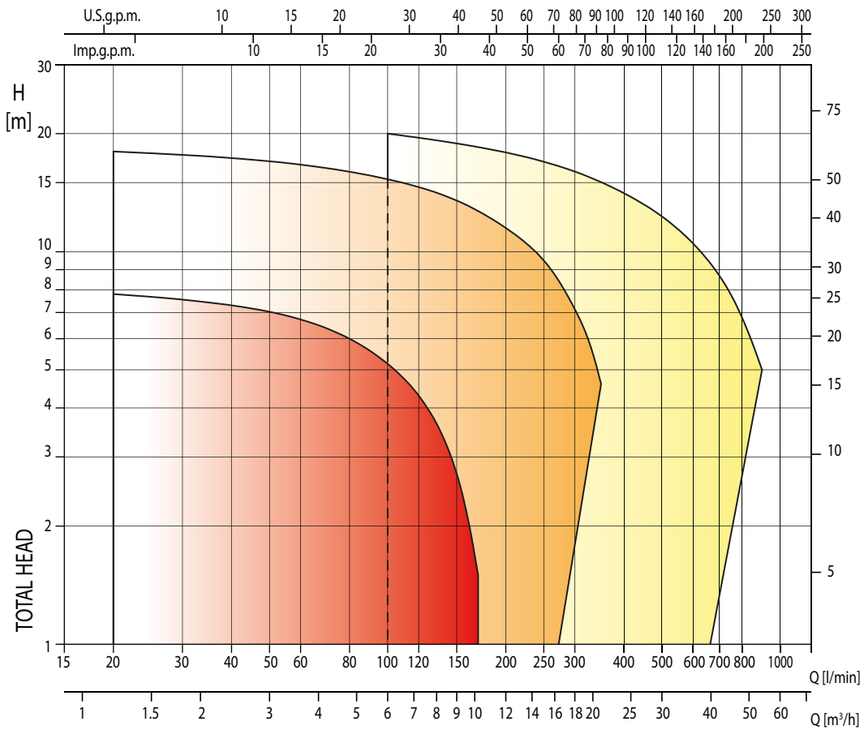

OPTIMA
BEST ONE

BEST 2-5

DW - DW VOX

Technology, performance, quality

Technology, **Performance**, **Quality**: words that can take on different shapes and meanings. For EBARA they assume a **precise meaning**.
They represent the characteristics that distinguish their products and that are also found in the wide range of submersed electric pumps: high technology used in production, performance of a very wide range that covers the most types of use, quality in the details and precision of the technical solutions adopted.

The steel submersible pumps summarise all this: the **steel range** was conceived and designed to offer **high quality standards** in the field of domestic applications.

The same quality, the same technology, the same **EBARA imprint** also in submersible pumps

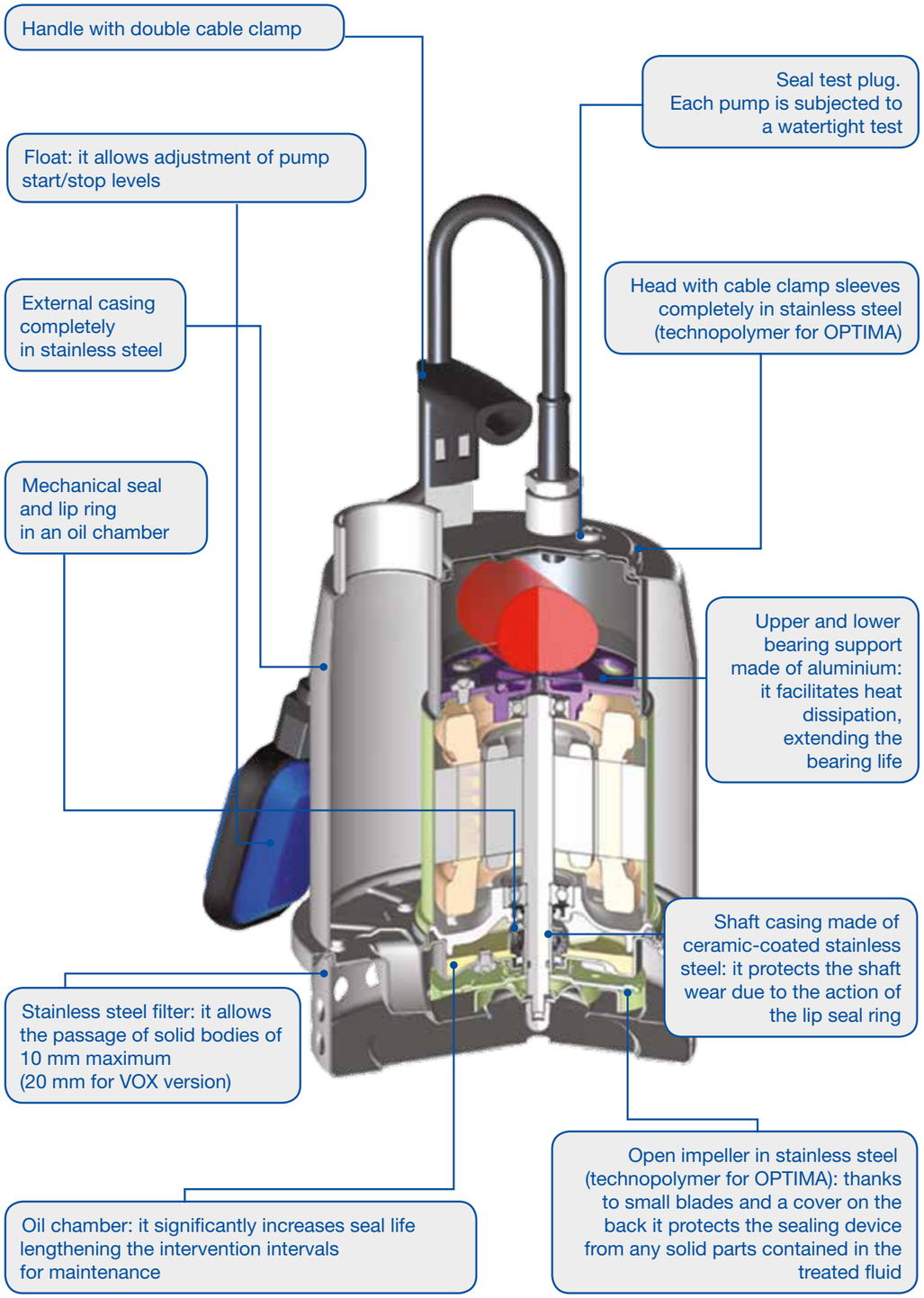

From long and proven industry experience, high technology comes to small household electric pumps

Small domestic pumps or for large industrial plants, there is no difference. Our goal is to offer the product that best suits requirements, in every situation. For these reasons we offer our experience, gained in more than 100 years in the field of waste water treatment, both for industrial products and for domestic pumps.

The electric pumps are made of stainless steel AISI 304, to ensure maximum reliability and resistance. The technical solutions adopted, as well as the matching accessories, ensure this range of high performance and a variety of solutions that adapt to any need.

The OPTIMA, easy-to-use light-water electric pumps, are part of this range. The BEST ONES, also for clear waters that also feature the vortex type impeller option (BEST ONE VOX version). Following on, with similar constructive characteristics but offering greater performance, are the BEST 2 - 5. The two larger models complete the range of submersed steel pumps: the DW - DW VOX, suitable for waste water, used with sewage and also available with a vortex impeller.

The Vox type impellers available on a number of models, as well as the minimal suction device or the magnetic float, are accessories that best express the versatility of domestic pumps. Quality and technological innovation, distinctive signs of EBARA.

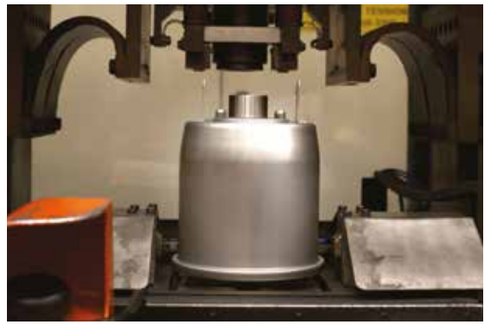

OPTIMA

Submersible pumps in AISI 304

Submersible electric pump for clear water with AISI 304 stainless steel hydraulics.
Pump body, intake grille, seal holder disc and motor casing are in AISI 304. Impeller in PPE + PS reinforced with glass fibres, and shaft in AISI 303.
The mechanical seal is standard (Ceramic/Carbon/NBR)
- MA version (fig.1) with float
- MS version (fig.3) with MS vertical magnetic float with reduced dimensions for clean water

Accessories

- 1"¼ hose connector and relative hose clamp (optional)
- Minimum suction device up to 3 mm (fig. 2)

Practical and easy to use

Possibility of use in fixed and mobile installations

Resistant to corrosion

- Total head from 1.5 to 7 m
- Capacity from 1.2 to 9 m³/h
- Maximum immersion 5 m
- Maximum liquid temperature 50°C
- Maximum solid size passage 10 mm

Low suction device
It allows aspiration to 3 mm from the ground (only for M and MA version). Easily mountable with simple pressing

MS magnetic float (vertical)
It allows the use of floating pumps where space is limited (not compatible with low suction device)

Performance curve

50Hz

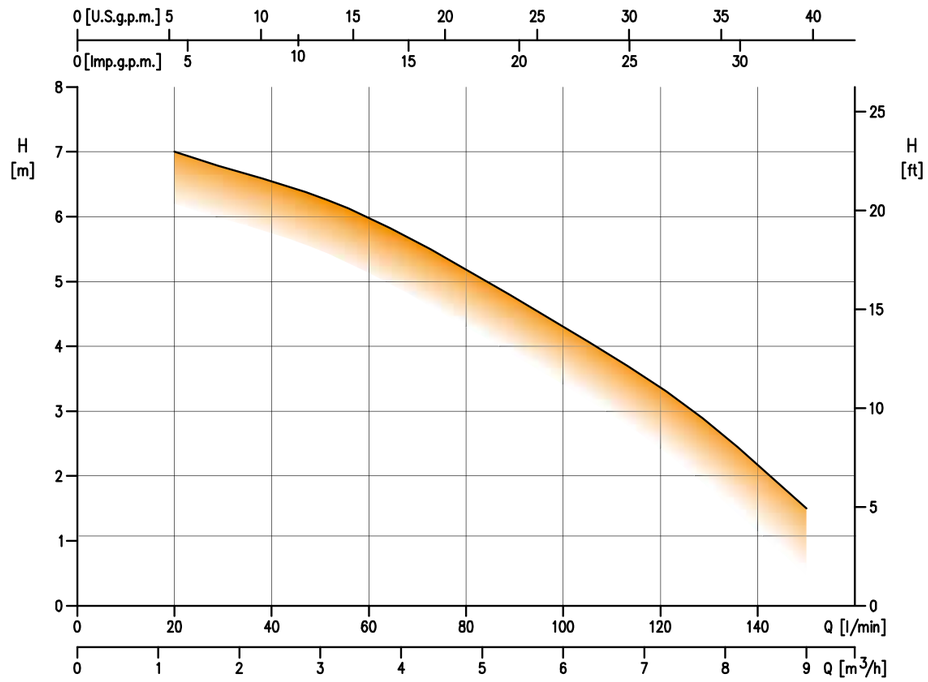

INSTALLATION

The OPTIMA electric pumps have a wide versatility of installation. The possibility of choosing between the vertical magnetic float (small) or the float switch allows choosing of the best option, also based on the space available to insert the pump. Furthermore, the choice of switch type also depends on the water level for which pump start is preferred.

OPTIMA MS

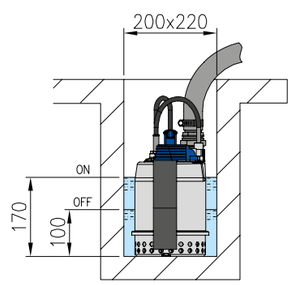

OPTIMA MA

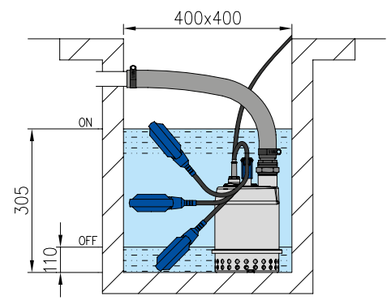

BEST ONE - ONE VOX

Fully submersed electric pumps in AISI 304

Possibility of use in fixed and mobile installations

Resistant. to corrosion

Practical and easy to use

Submersible electric pump for clear water with AISI 304 stainless steel hydraulics. Outer casing, impeller, filter, motor cover, seal holder disc and motor case all in AISI 304, shaft in AISI 303. The mechanical seal is standard in Ceramic/Carbon/NBR. Provided with 5 m of power cable type H05 RN - F (single phase), H07 RN - F (three phase) for internal use, with or without float.

Special Versions

- Version MA (fig. 1) with float
- Version VORTEX (VOX) (fig. 2)
- Version MA (fig. 3) with magnetic float
  MS vertical with reduced dimensions for clean water

Accessories

- 1"¼ hose connector and relative hose clamp (optional)
- Minimum suction device up to 3 mm (fig. 4)

- Total head from 1,5 to 7,8 m for BEST ONE and from 1,3 to 5,5 m for BEST ONE VOX
- Capacity from 1.2 to 10.2 m³/h
- Maximum immersion 5 m
- Maximum liquid temperature 50°C
- Maximum solid size passage:
  - 10 mm
  - 20 mm for version VOX (VORTEX)

Low suction device
It allows aspiration to 3 mm from the ground (only for M and MA version). Easily mountable with simple pressing.

MS magnetic float (vertical)
It allows the use of floating pumps where space is limited (not compatible with low suction device)

Performance curve

50Hz

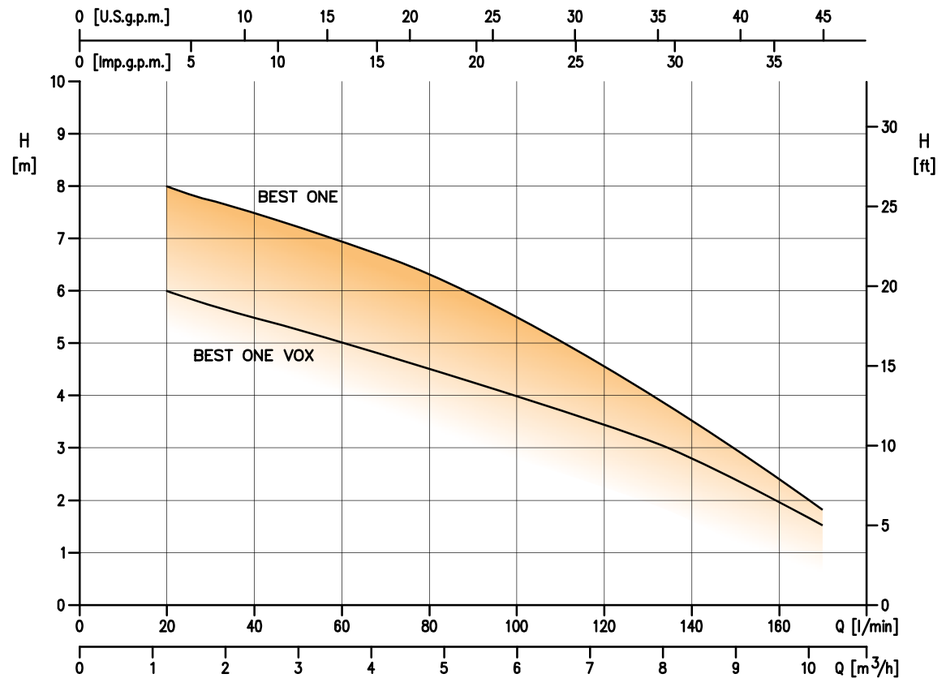

INSTALLATION

The BEST ONE electric pumps have a wide versatility of installation. The possibility of choosing between the vertical magnetic float (small) or the float switch allows choosing of the best option also based on the space available to insert the pump. Furthermore, the choice of switch type also depends on the water level for which pump start is preferred.

BEST ONE MS

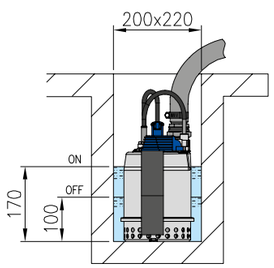

BEST ONE MA

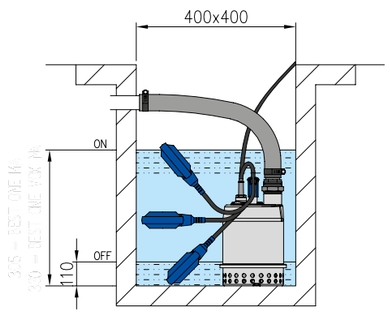

BEST 2-5

Submersible pumps in AISI 304

Submersible electric pump completely in AISI 304 stainless steel.
The pump body, the impeller, the suction grille, the motor cover, the seal holder disc and the motor case are in AISI 304.
The shaft is in AISI 303 (part in contact with the liquid). Double mechanical seal with oil chamber: the upper one in Carbon/Ceramic/NBR (motor side), the lower one in SiC/SiC/NBR (pump side).

Special Versions
- MA Version with float

Possibility of use in fixed and mobile installations

Practical and easy to use

- Total head from 3 to 18 m
- Capacity from 1,2 to 21 m³/h
- Maximum immersion 7 m
- Maximum liquid temperature 35°C
- Maximum solid size passage 10 mm

EBARA Pumps Europe

Performance curve

50Hz

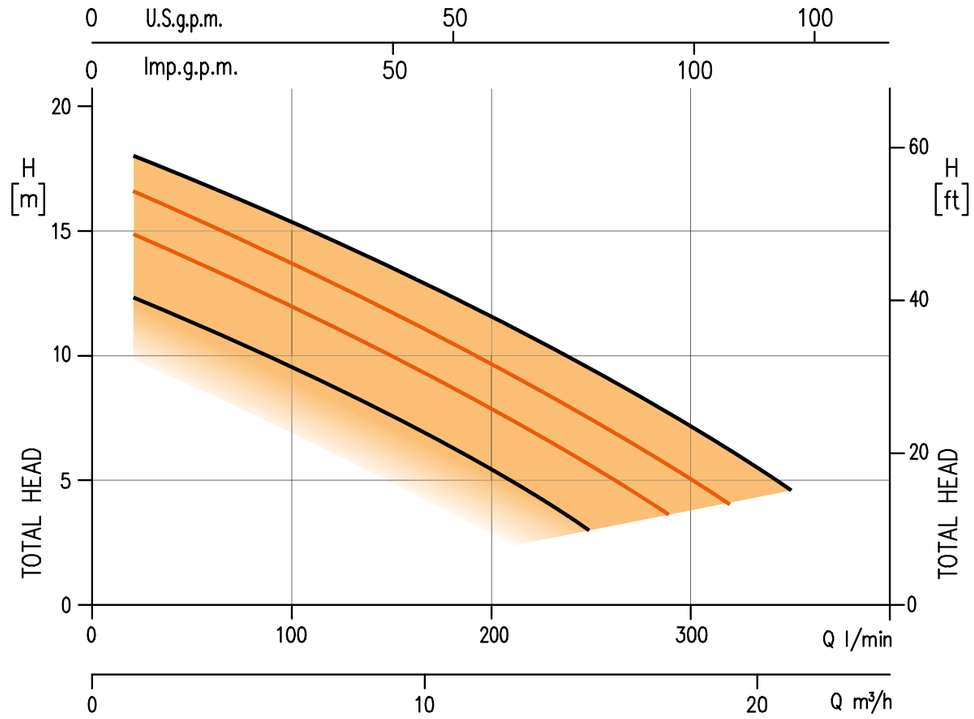

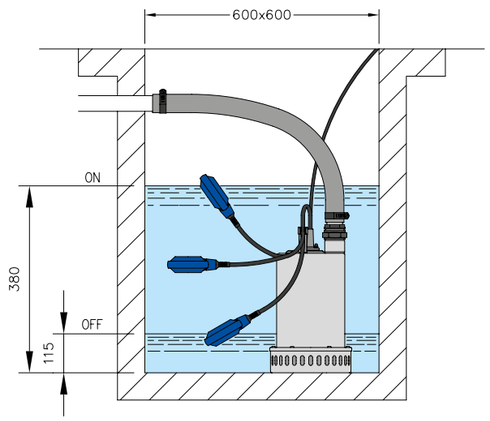

INSTALLATION

The BEST 2 - 5 electric pumps are also available with a float switch, thus increasing the versatility of use. The choice of the use of the float switch requires the respecting of minimum installation spaces to guarantee correct operation of the pump itself.

DW – DW VOX

Submersible electric pumps for waste water in AISI 304

Submersible electric pumps in stainless steel AISI 304 for sewage. They have a pump body, impeller, motor cover, seal holder disc and motor case in AISI 304, while the shaft is in AISI 303. Double mechanical seal with interposed oil chamber: the upper one in carbon/ceramic/NBR (motor side), the lower one in SiC/SiC/NBR (pump side).
G20 cast iron spacer (only for DW – DW VOX 300).
Available single-phase versions with or without float.

- Total head from 2 to 20 m for DW and from 1,5 a 16,1 m for DW VOX
- Capacity from 6 a 54 m³/h for DW and from 6 to 48 m³/h for DW VOX
- Maximum immersion 7 m
- Maximum liquid temperature 40°C
- Maximum solid size passage 50 mm

Special Versions

- Single-channel impeller version (DW)
- Vortex type impeller version (DW VOX)
- Flanged version (DWF/DW VOXF)

Accessories

Descent device kit
- Guide hook DW - DW VOX in cast iron
- Fixed hook DW - DW VOX in cast iron
- On request version with special seal of Tungsten Carbide/Tungsten Carbide + FPM O-Ring

Possibility of use in fixed and mobile installations

Performance curve

50Hz

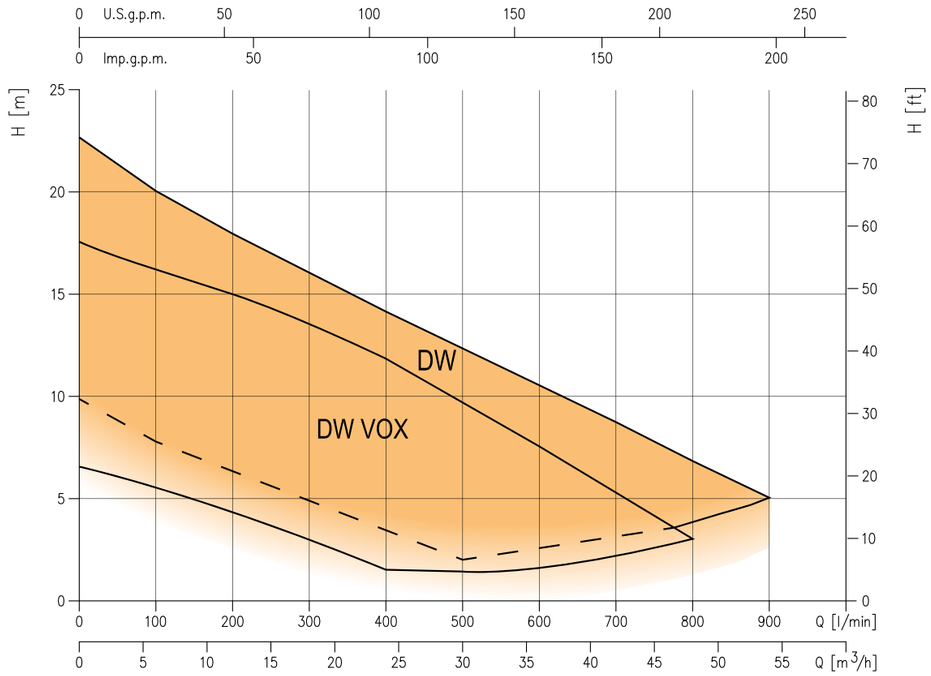

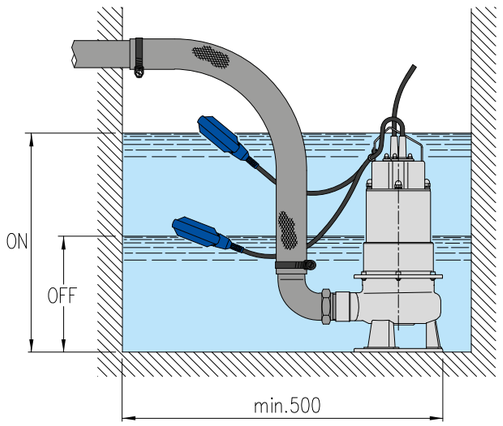

INSTALLATION

The DW - DW VOX electric pumps are also available with a float switch, thus increasing the versatility of use. The choice of the use of the float switch requires the respecting of minimum installation spaces to guarantee correct operation of the pump itself.

EZ-finder, more than just a simple selector

EZ-finder, a way to look for a model of electric pump?? **Much more**.
It is the ultimate tool to find and select the right product for your needs.
Thanks to the logic of the selector, it is possible to search for a product in **various ways**: according to the point of work, by entering the model name or by selecting the application type. **Simple**, the right product in seconds.
EZ-finder is the **ideal tool** available to the installer, the designer or the engineer.

Discover it at the link **https://ezfinder.ebara.com**

EBARA Pumps Europe

Everything that you need just a click away

visit our website www.ebaraeurope.com

Data book
Complete technical documentation to be consulted to obtain all the data related to the pumps

Instruction manual
The manual with all the information needed for correct installation of our pumps

Kensaku
a system for the selection of spare parts

Ez-finder
The correct pump selection software for every need
https://ezfinder.ebara.com

Service
A team of professionals at your disposal to advise you in your choice of pump and to offer post sale assistance

EBARA sales network

EUROPE

EBARA Pumps Europe S.p.A.
Via Torri di Confine 2/1 int. C
36053 Gambellara (Vicenza), Italy
Phone +39 0444 706811
Fax +39 0444 405811
www.ebaraeurope.com

Italian Sales (for order only):
e-mail: ordini@ebaraeurope.com

Export Sales (for order only):
e-mail: exportsales@ebaraeurope.com

Technical Customer Service (TCS):
e-mail: tcs@ebaraeurope.com
Phone +39 0444 706869/902/923/833

Marketing:
e-mail: marketing@ebaraeurope.com

EBARA Pumps Europe S.p.A. GERMANY
Elisabeth-Selbert-Straße 2
63110 Rodgau, Germany
Phone +49 (0) 6106-660 99-0
Fax +49 (0) 6106-660 99-45
e-mail: info@ebara.de

EBARA Pumps Europe S.p.A. UNITED KINGDOM
Unit A, Park 34
Collett Way - Didcot
Oxfordshire - OX11 7WB, United Kingdom
Phone +44 1895 439027 - Fax +44 1235 815770
e-mail: mktguk@ebaraeurope.com

EBARA Pumps Europe S.p.A. FRANCE
555, Rue Juliette Recamier
69970 Chaponnay, France
Phone +33 4 72769482
Fax +33 805101071
e-mail: mktgf@ebaraeurope.com

EBARA POMPY POLSKA Sp. z o.o.
ul. Działkowa 115 A
02-234 Warszawa, Poland
Phone +48 22 3909920
Fax +48 22 3909929
e-mail: mktgpl@ebaraeurope.com

EBARA Pumps RUS Ltd.
Prospekt Andropov 18, building 7, floor 11
115432 Moscow
Phone +7 499 6830133
e-mail: mktgrus@ebaraeurope.com

EBARA PUMPS IBERIA, S.A.
Poligono Ind. La Estación
C/Cormoranes 6-8
28320 Pinto (Madrid), Spain
Phone +34 916.923.630
Fax +34 916,910,818
e-mail: marketing@ebara.es

MIDDLE EAST

EBARA Pumps Middle East FZE
P.O.BOX 61383
Jebel Ali, Dubai, UAE
Phone +971 4 8838889
Fax +971 4 8835307
e-mail: info@ebarame.ae

EBARA PUMPS SAUDI ARABIA LLC
St. 98, Dammam Second Industrial City, P.O.Box. 9210,
Dammam 34333, Kingdom of Saudi Arabia
Phone 966-138022014

ASIA AND SOUTH-EAST ASIA

EBARA Corporation
11-1, Haneda Asahi-cho, Ohta-ku,
Tokyo 144-8510, Japan
Phone +81 3 3743-6111
Fax +81 3 5736 3100
www.ebara.co.jp

EBARA Corporation Fujisawa plant
4-2-1, Hon-Fujisawa, Fujisawa-shi.
Kanagawa 251-8502, Japan
Phone +81-466-83-8111
Fax +81-466-81-2164

EBARA Machinery (CHINA) CO.,Ltd.
Room No.303, Beijing Fortune Plaza, No.7
Dongsanhuan Zhong Road, Chaoyang District
Beijing, 100020 P. R. China
Phone 86-10-65309996
Fax 86-10-6530-8968
e-mail: emc@ebare.cn
www.ebara.cn

EBARA Densan (Qingdao) Technology Co., Ltd.
No.88, Wangsha Road, Chengyang Qingdao,
Shandong Province, P.R.China
Phone 86-532-8965-3382
Fax 86-532-8965-3379
www.edq-ebara.com

EBARA-Densan Taiwan Manufacturing Co., Ltd.
No.7, Nan-Yuen 2nd Road, Chung Li City,
Tao Yuen Hsien, Taiwan
Phone 886-3-451-5881
Fax 886-3-452-7904
www.ebara.com.tw

EBARA Thailand Limited
3rd Floor Achme Build. 125 Phetchburi Road
Tungphayathai, Rajthevee, Bangkok 10400, Thailand
Phone 66-2-216-4935
Fax 66-2-216-4937
e-mail: info@ebara.co.th
www.ebara.co.th/index.php/en/

EBARA Fluid Machinery Korea Co., Ltd.
3rd Fl. Hyun-Seok Tower, 50,
Seolleung-Ro 93-Gil, Gangnam-Gu
Seoul, 135-513 Korea
Phone 82 70 43621100
Fax 82 70 82302030
e-mail: nishikura.ryutaro@efmk-ebara.com

EBARA Pumps Philippines, Inc.
Canlubang Industrial Estate,
Cabuyao 4025, Laguna, Philippines
Phone 0063-49-549-1806
Fax 0063-49-549-1915
e-mail: marketing@ebaraphilippines.com
www.ebaraphilippines.com.ph

P.T. EBARA Indonesia
Jl. Raya Jakarta - Bogor Km. 32
Desa Curug, Cimanggis-Depok
Jawa Barat, 16953 Indonesia
Phone (62-21) 874 0852-53
Fax (62-21) 874 0033
e-mail: marketing@ebaraindonesia.com
www.ebaraindonesia.com

EBARA Pumps Malaysia Sdn. Bhd
6, Jalan TP3, UEP Subang Jaya Industrial Park,
47620, Subang Jaya, Selangor, Malaysia.
Phone 603-8023 6622
Fax 603-8023 9355
e-mail: sales@ebara.com.my
www.ebara.com.my

EBARA Engineering Singapore Pte. Ltd.
No 1, Tuas Link 2, Singapore 638550
Phone 65-6862-3536
Fax 65-6861-0589
e-mail: stdpump@ebrnet.com.sg
www.ebara.com.sg

EBARA MACHINERY INDIA PRIVATE LIMITED
#133, 1st Floor, Velachery Main Road, Guindy,
Chennai 600 032, India
Phone 91-755-0089388

EBARA Vietnam Pump Company Limited
Lai Cach Industrial Zone, Lai Cach Town,
Cam Giang District,
Hai Duong Province, Vietnam
Tel 84-2203-850182
Fax 84-2203-850180
e-mail: info@evpc-vn.com
www.ebarapump.com.vn/en/

AMERICA

EBARA PUMPS AMERICAS CORPORATION
1651 Cedar Line Drive
Rockhill, South Carolina 29730 U.S.A.
Phone 803 327-5005
Fax 803 327-5097
e-mail: info@pumpsebara.com
www.pumpsebara.com

EBARA Industrias Mecanicas
& Comercio Ltda. (Brazil)
Rua Joaquim Marques de Figueiredo, 2-31,
Distrito Industrial, CEP 17034-290, Bauru, SP, Brazil
Phone +55 14 4009-0000
Fax +55 14 4009-0044
e-mail: assistencia@ebara.com.br
www.ebara.com.br/ebara/pt/index.php

Thebe Bombas Hidraulicas S.A.
Avenida Manoel Gomes Casaca, 840 Parque Industrial,
Vargem Grande do Sul City, Sao Paulo State, CEP:
13.880-970, Brazil
Phone 55-19-3641-9100
Fax 55-19-3641-9114
www.thebe.com.br

EBARA Bombas Colombia S.A.S.
Autopista Medellin km 7 Celta Trade Park Bodega
02 Lote 116 Funza. Republica de Colombia
Phone 57-1-826-9865

AFRICA

EBARA PUMPS SOUTH AFRICA (PTY) LTD
26 Kyalami Boulevard,Kyalami Business Park,
1684, Midrand, Gauteng
South Africa
Phone: +27 11 466 1844
Fax: +27 11 466 1933

OCEANIA

EBARA Pumps Australia Pty. Ltd.
7, Holloway Drive
Bayswater 3153 Victoria, Australia
Phone 0061-3-97613033
Fax 0061-3-97613044
e-mail: berrett@ebara.com.au
sales@ebara.com.au
www.ebara.com.au/index.html

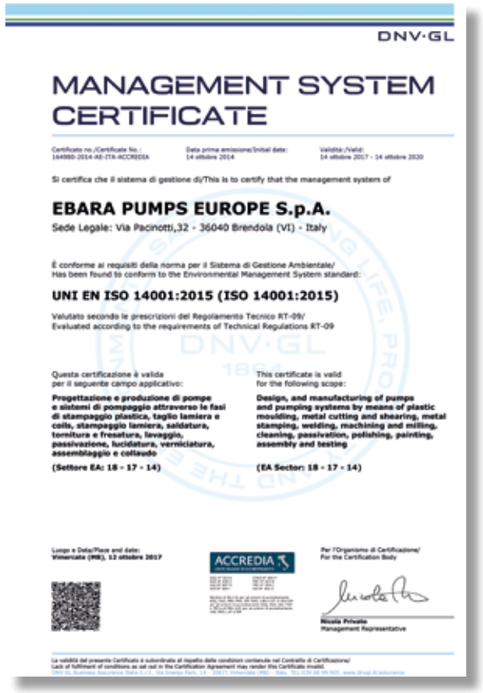

DNV·GL

MANAGEMENT SYSTEM CERTIFICATE

Certificato no./Certificate No.: 164980-2014-AE-ITA-ACCREDIA
Data prima emissione/Initial date: 14 ottobre 2014
Validità/Valid: 14 ottobre 2017 - 14 ottobre 2020

Si certifica che il sistema di gestione di/This is to certify that the management system of

EBARA PUMPS EUROPE S.p.A.
Sede Legale: Via Pacinotti,32 - 36040 Brendola (VI) - Italy

È conforme ai requisiti della norma per il Sistema di Gestione Ambientale/
Has been found to conform to the Environmental Management System standard:

UNI EN ISO 14001:2015 (ISO 14001:2015)

Valutato secondo le prescrizioni del Regolamento Tecnico RT-09/
Evaluated according to the requirements of Technical Regulations RT-09

Questa certificazione è valida
per il seguente campo applicativo:

Progettazione e produzione di pompe e sistemi di pompaggio attraverso le fasi di stampaggio plastica, taglio lamiera e coils, stampaggio lamiera, saldatura, tornitura e fresatura, lavaggio, passivazione, lucidatura, verniciatura, assemblaggio e collaudo

(Settore EA: 18 - 17 - 14)

This certificate is valid
for the following scope:

Design, and manufacturing of pumps and pumping systems by means of plastic moulding, metal cutting and shearing, metal stamping, welding, machining and milling, cleaning, passivation, polishing, painting, assembly and testing

(EA Sector: 18 - 17 - 14)

Luogo e Data/Place and date:
Vimercate (MB), 12 ottobre 2017

ACCREDIA

Per l'Organismo di Certificazione/
For the Certification Body

Nicola Privato
Management Representative

La validità del presente Certificato è subordinata al rispetto delle condizioni contenute nel Contratto di Certificazione/
Lack of fulfilment of conditions as set out in the Certification Agreement may render this Certificate invalid.
DNV GL Business Assurance Italia S.r.l. Via Energy Park, 14 , 20871 Vimercate (MB), Italy. Tel: 039 68 99 905. www.dnvgl.it/businessassurance

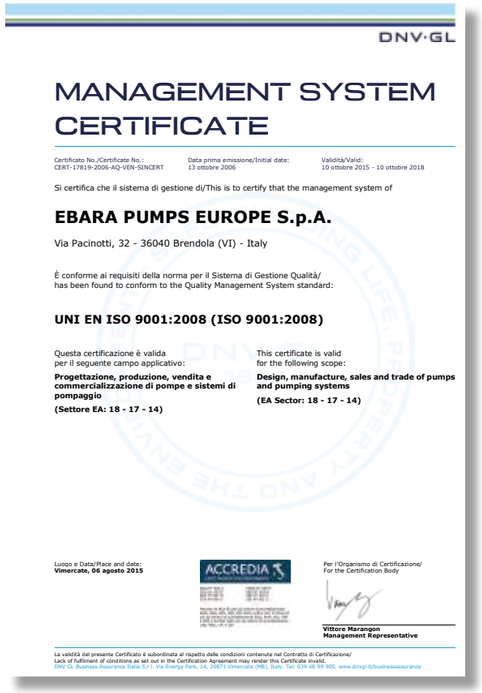

DNV·GL

MANAGEMENT SYSTEM CERTIFICATE

Certificato No./Certificate No.:
CERT-17819-2006-AQ-VEN-SINCERT
Data prima emissione/Initial date:
13 ottobre 2006
Validità/Valid:
10 ottobre 2015 - 10 ottobre 2018

Si certifica che il sistema di gestione di/This is to certify that the management system of

EBARA PUMPS EUROPE S.p.A.

Via Pacinotti, 32 - 36040 Brendola (VI) - Italy

È conforme ai requisiti della norma per il Sistema di Gestione Qualità/
has been found to conform to the Quality Management System standard:

UNI EN ISO 9001:2008 (ISO 9001:2008)

Questa certificazione è valida
per il seguente campo applicativo:

Progettazione, produzione, vendita e commercializzazione di pompe e sistemi di pompaggio

(Settore EA: 18 - 17 - 14)

This certificate is valid
for the following scope:

Design, manufacture, sales and trade of pumps and pumping systems

(EA Sector: 18 - 17 - 14)

Luogo e Data/Place and date:
Vimercate, 06 agosto 2015

ACCREDIA

Per l'Organismo di Certificazione/
For the Certification Body

Vittore Marangon
Management Representative

La validità del presente Certificato è subordinata al rispetto delle condizioni contenute nel Contratto di Certificazione/
Lack of fulfilment of conditions as set out in the Certification Agreement may render this Certificate invalid.
DNV GL Business Assurance Italia S.r.l. Via Energy Park, 14, 20871 Vimercate (MB), Italy. Tel: 039 68 99 905. www.dnvgl.it/businessassurance

EBARA

Japanese Technology since 1912

www.ebaraeurope.com

EBARA Pumps Europe S.p.A.
Via Torri di Confine 2/1 int. C
36053 Gambellara (Vicenza), Italy
Phone +39 0444 706811
Fax +39 0444 405811
ebara_pumps@ebaraeurope.com
www.ebaraeurope.com

EBARA Pumps Europe S.p.A. reserves the right to make changes without notice: all the specifications may be subject to change

EBARA Corporation
11-1, Haneda Asahi-cho, Ohta-ku,
Tokyo 144-8510
Japan
Phone +81 3 6275 7598
Fax +81 3 5736 3193
www.ebara.com

47970562 1 05/18