PIPELINE PUMP

CONTENT’

02 SPECTRUM

08 PRODUCT APPLICATION TABLE

09 DATA PARAMETER

13 INSTALLATION SIZE

45 OVERALL DATA

49 MOTOR

49 ATTACHMENT BOTTOM

PTD single -level pipeline circulation pump
diameter range: 32-300mm
Power range: 0.75-260kW
2 poles below 100 caliber and 4 poles above 125 caliber

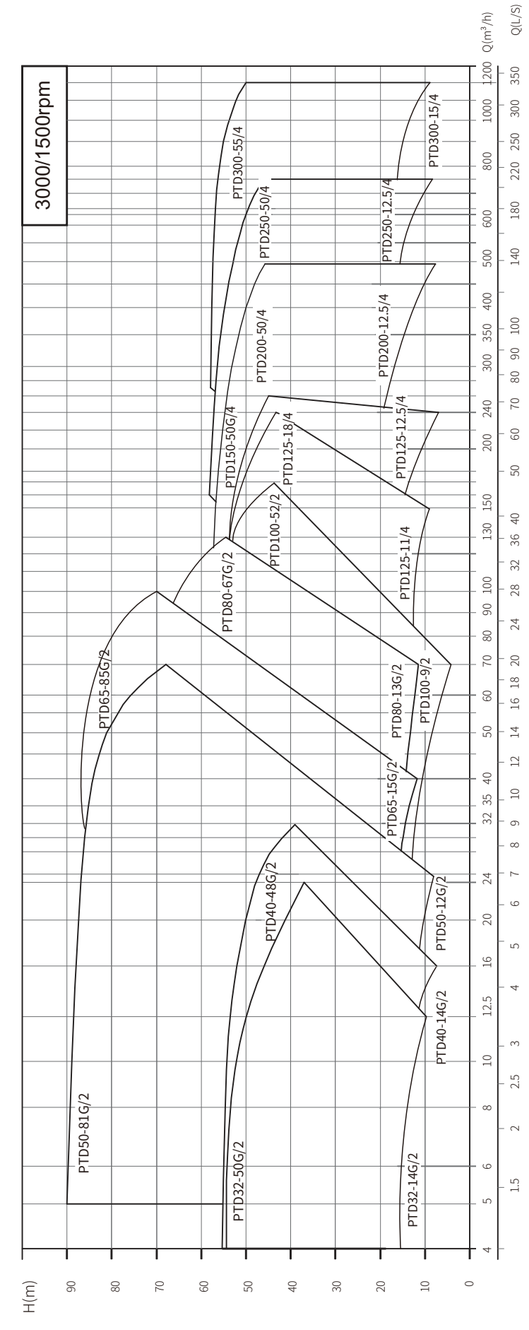

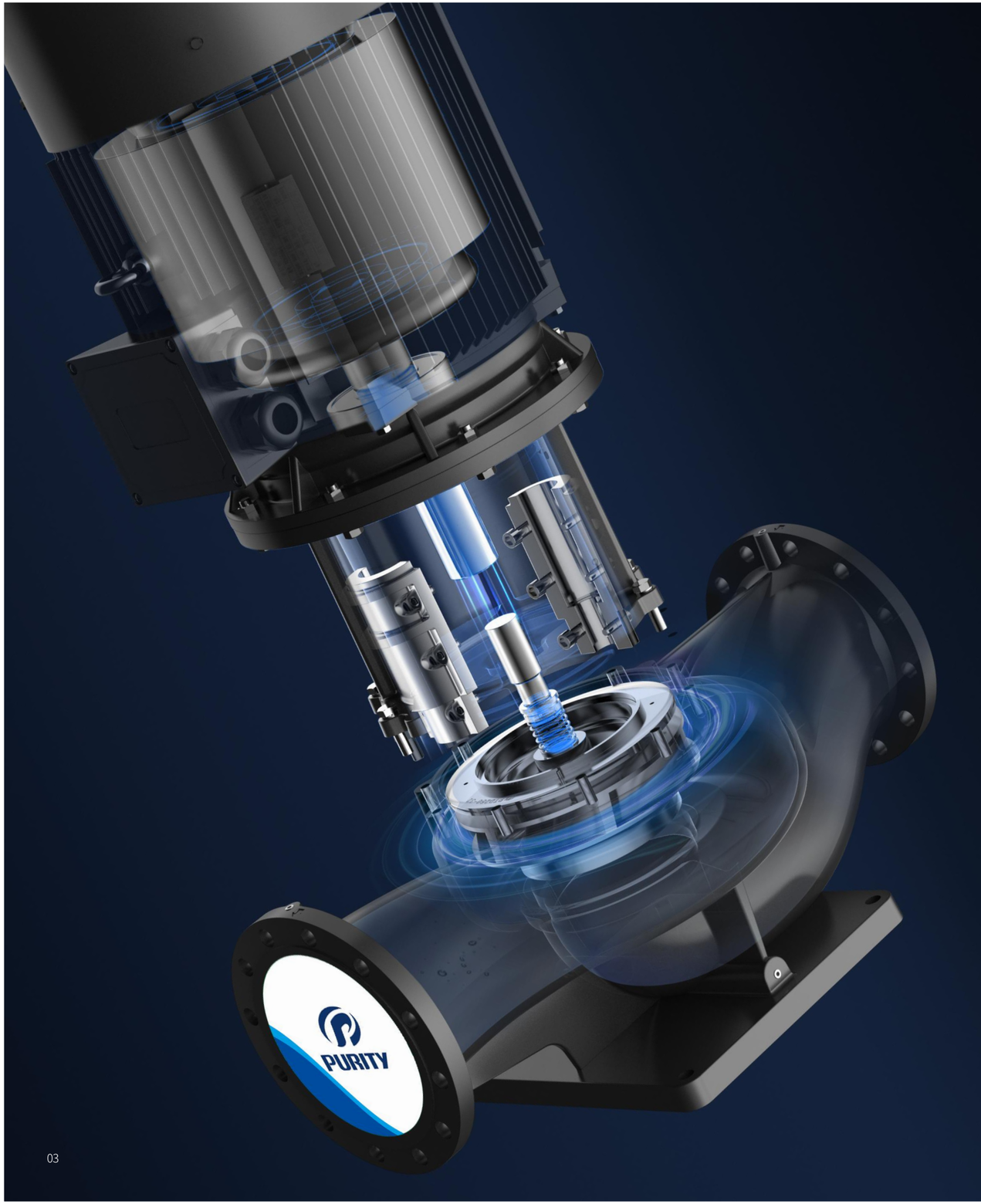

PTD

PTD SINGLE STAGE PIPELINE CIRCULATION PUMP

PRODUCT
EXPLODED VIEW

PTD SINGLE STAGE PIPELINE CIRCULATION PUMP

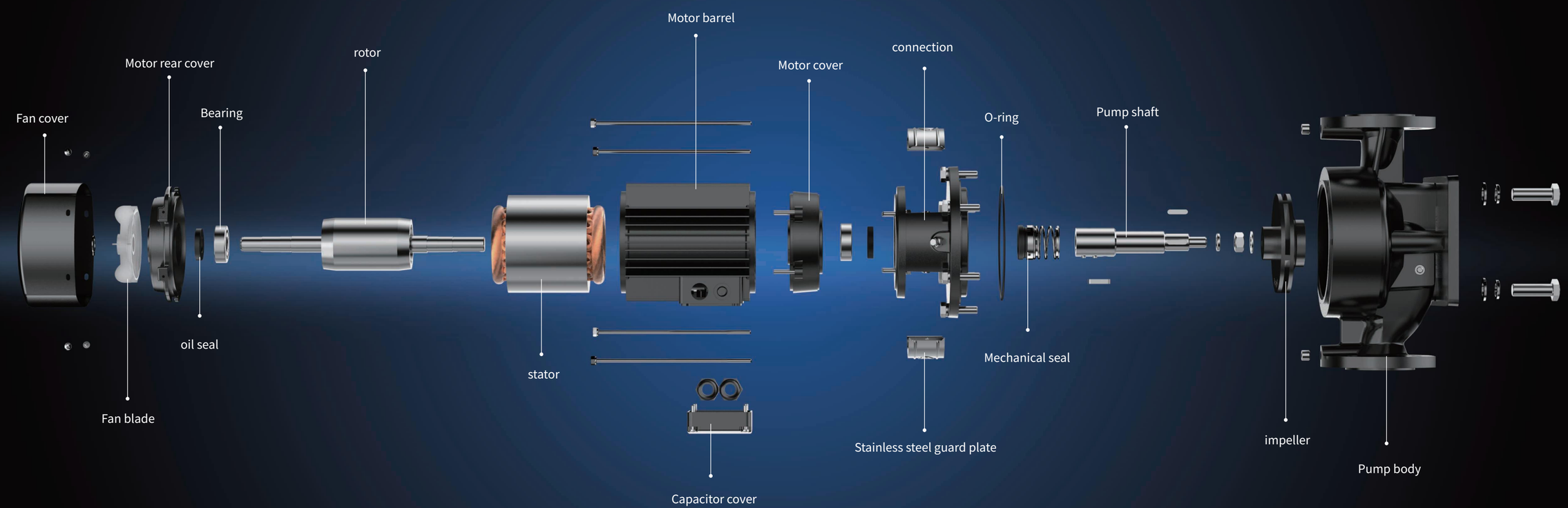

PTD
single stage pipeline circulation pump

0.75~260KW/50Hz:3000/1500rpm

Conditions of Use

- Protection grade: IP55
- Flow range: 8-900m ^{3}/ h
- Head range: 9-81m
- Power range: 0.75~260kW
- Maximum working pressure: 12bar for conventional type; Special type is 16bar
- Liquid temperature: - 15°C to 110°C
- Ambient temperature: maximum+40°C
- Altitude: up to 1000 m
- Rotation direction: clockwise (looking down at the motor blade end)

Application Environment

- Heating system: heating cycle, boiler mixed flow, temperature mixed flow, intermittent heating, domestic water cycle
- Air conditioning system: chilled cooling water circulation
- Water supply system: filtration and transmission, pipeline pressurization
- Industrial production: flushing and cleaning system, boiler feed water, cooling water circulation, water treatment system, equipment leather cover facilities, fire protection system

Model description

PTD 50 — 40 G / 2

- 2 — Motor stage
- G — New generation pipeline pump
- 40 — Rated lift (m)
- 50 — Nominal diameter of suction buckle (DN)
- PTD — Special single-stage pipeline circulating pump

PTD 80 — 28 / 2

- 2 — **2=** 2 poles motor 2900 rpm; **4=** 4 poles motor 1450 rpm
- 28 — **28=** Nominal Head (m)
- 80 — **80=** Inlet and outlet size (mm)
- PTD — **PTD=** Inline pipeline circulating pump

Structure And Characteristics

1. PTD single-stage pipeline circulating pump is composed of standard motor, mechanical seal and pump.
2. The motor shaft and pump shaft are designed independently for easy maintenance and replacement.
3. Electrophoretic anti rust treatment of the accessories of this product greatly reduces the pollution to the liquid conveyed and the environment.
4. Equipped with national standard motor, IP55 protection grade, energy-saving effect is better than ordinary motor.
5. The pump head and impeller are subject to professional CFD hydraulic analysis and scientific optimization, which greatly improves the compatibility and hydraulic performance.
6. The pump body, impeller, connection and other castings are all treated with electrophoresis surface, which has super rust resistance and can pass the salt spray test for up to 72 hours without any corrosion.
7. The appearance shows the atmosphere, and the user-friendly design of the detachable type is more convenient for disassembly, installation and use.
8. The pump shaft is made of 304 stainless steel+45 # steel by friction welding. It is made of cold extrusion and machining center metal processing, with good concentricity, high precision, low running noise, and stronger rust prevention ability by blackening the shaft sleeve end after metal processing.

PTD
Single Stage Pipeline Circulating Pump

0.75~260KW/50Hz:3000/1500rpm

DATA PARAMETER

Model	Synchronous speed r/min	Power kW	DN mm	Rated flow m³/h	Rated head m
PTD32-14G/2	3000	0.75	32	8	14
PTD32-18G/2	3000	1.1	32	8	18
PTD32-21G/2	3000	1.5	32	12.5	21
PTD32-26G/2	3000	2.2	32	12.5	26
PTD32-33G/2	3000	3	32	12.5	33
PTD32-40G/2	3000	4	32	12.5	40
PTD32-50G/2	3000	5.5	32	12.5	50
PTD40-14G/2	3000	0.75	40	8	14
PTD40-16G/2	3000	1.1	40	12.5	16
PTD40-21G/2	3000	1.5	40	12.5	21
PTD40-20G/2	3000	2.2	40	20	20
PTD40-26G/2	3000	3	40	20	26
PTD40-30G/2	3000	4	40	25	30
PTD40-36G/2	3000	5.5	40	25	36
PTD40-48G/2	3000	7.5	40	25	48
PTD50-12G/2	3000	1.1	50	16	12
PTD50-15G/2	3000	1.5	50	20	15
PTD50-18G/2	3000	2.2	50	25	18
PTD50-24G/2	3000	3	50	25	24
PTD50-28G/2	3000	4	50	30	28
PTD50-32G/2	3000	3	50	12.5	32
PTD50-35G/2	3000	5.5	50	30	35
PTD50-39G/2	3000	4	50	12.5	39
PTD50-40G/2	3000	7.5	50	35	40
PTD50-49G/2	3000	5.5	50	12.5	49
PTD50-50G/2	3000	11	50	40	50
PTD50-59G/2	3000	7.5	50	12.5	59
PTD50-60G/2	3000	15	50	50	60
PTD50-70G/2	3000	18.5	50	50	70
PTD50-80G/2	3000	11	50	12.5	80
PTD50-81G/2	3000	22	50	50	81
PTD65-15G/2	3000	2.2	65	30	15
PTD65-20G/2	3000	3	65	30	20
PTD65-22G/2	3000	4	65	40	22
PTD65-30G/2	3000	5.5	65	40	30
PTD65-34G/2	3000	7.5	65	50	34
PTD65-37G/2	3000	5.5	65	25	37

PTD
Single Stage Pipeline Circulating Pump

0.75~260KW/50Hz:3000/1500rpm

DATA PARAMETER

Model	Synchronous speed r/min	Power kW	DN mm	Rated flow m³/h	Rated head m
PTD65-41G/2	3000	11	65	50	41
PTD65-48G/2	3000	7.5	65	25	48
PTD65-51G/2	3000	15	65	50	51
PTD65-61G/2	3000	18.5	65	50	61
PTD65-68G/2	3000	22	65	50	68
PTD65-85G/2	3000	30	65	50	85
PTD80-13G/2	3000	3	80	50	13
PTD80-18G/2	3000	4	80	50	18
PTD80-23G/2	3000	5.5	80	50	23
PTD80-29G/2	3000	7.5	80	50	29
PTD80-32G/2	3000	11	80	70	32
PTD80-38G/2	3000	15	80	80	38
PTD80-41G/2	3000	11	80	50	41
PTD80-47G/2	3000	18.5	80	80	47
PTD80-48G/2	3000	15	80	50	48
PTD80-54G/2	3000	22	80	80	54
PTD80-67G/2	3000	30	80	80	67
PTD100-9/2	3000	2.2	100	50	9
PTD100-15/2	3000	4	100	60	15
PTD100-17/2	3000	5.5	100	80	17
PTD100-22/2	3000	7.5	100	80	22
PTD100-25/2	3000	11	100	100	25
PTD100-27/2	3000	11	100	100	27
PTD100-32/2	3000	15	100	100	32
PTD100-33/2	3000	15	100	100	33
PTD100-40/2	3000	18.5	100	100	40
PTD100-48/2	3000	22	100	100	48
PTD100-52/2	3000	30	100	130	52
PTD125-11/4	1500	5.5	125	120	11
PTD125-14/4	1500	7.5	125	120	14
PTD125-18/4	1500	11	125	160	18
PTD125-20/4	1500	11	125	120	20
PTD125-22/4	1500	15	125	160	22
PTD125-28/4	1500	18.5	125	160	28
PTD125-32/4	1500	22	125	160	32
PTD125-40/4	1500	30	125	160	40
PTD125-48/4	1500	37	125	160	48

PTD
Single Stage Pipeline Circulating Pump

0.75~260KW/50Hz:3000/1500rpm

DATA PARAMETER

Model	Synchronous speed r/min	Power kW	DN mm	Rated flow m³/h	Rated head m
PTD125-50/4	1500	45	125	160	50
PTD150-12.5/4	1500	11	150	200	12.5
PTD150-15/4	1500	11	150	200	15
PTD150-17/4	1500	15	150	200	17
PTD150-18/4	1500	15	150	200	18
PTD150-20/4	1500	18.5	150	200	20
PTD150-21/4	1500	18.5	150	200	21
PTD150-25/4	1500	22	150	200	25
PTD150-33/4	1500	30	150	200	33
PTD150-40/4	1500	37	150	200	40
PTD150-50/4	1500	45	150	200	50
PTD200-12.5/4	1500	22	200	400	12.5
PTD200-16/4	1500	18.5	200	300	16
PTD200-19/4	1500	22	200	300	19
PTD200-20/4	1500	30	200	400	20
PTD200-23/4	1500	37	200	400	23
PTD200-24/4	1500	30	200	300	24
PTD200-27/4	1500	45	200	400	27
PTD200-31/4	1500	37	200	300	31
PTD200-32/4	1500	55	200	400	32
PTD200-36/4	1500	45	200	300	36
PTD200-43/4	1500	75	200	400	43
PTD200-47/4	1500	55	200	300	47
PTD200-50/4	1500	90	200	400	50
PTD200-53/4	1500	75	200	300	53
PTD250-12.5/4	1500	30	250	630	12.5
PTD250-14/4	1500	37	250	630	14
PTD250-16/4	1500	30	250	500	16
PTD250-17/4	1500	45	250	630	17
PTD250-19/4	1500	37	250	500	19
PTD250-20/4	1500	55	250	630	20
PTD250-22/4	1500	45	250	500	22
PTD250-26/4	1500	75	250	630	26
PTD250-29/4	1500	55	250	500	29
PTD250-32/4	1500	90	250	630	32
PTD250-36/4	1500	75	250	500	36
PTD250-40/4	1500	110	250	630	40

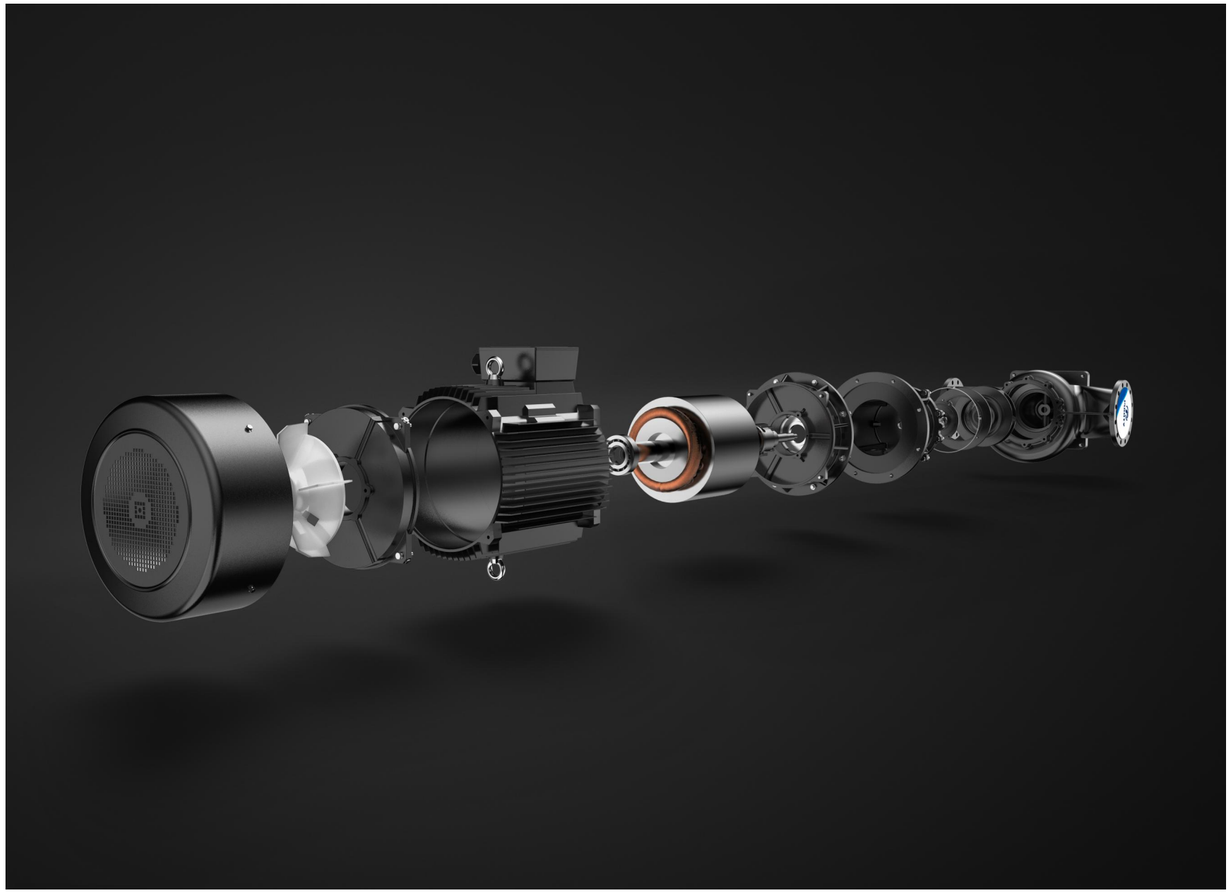

DATA PARAMETER

Model	Synchronous speed r/min	Power kW	DN mm	Rated flow m³/h	Rated head m
PTD250-47/4	1500	90	250	500	47
PTD250-50-4	1500	132	250	630	50
PTD250-56/4	1500	110	250	500	56
PTD300-15/4	1500	55	300	900	15
PTD300-20/4	1500	75	300	900	20
PTD300-25/4	1500	90	300	900	25
PTD300-30/4	1500	110	300	900	30
PTD300-35/4	1500	132	300	900	35
PTD300-44/4	1500	160	300	900	44
PTD300-55/4	1500	200	300	900	55

PERFORMANCE CURVE

2900rpm

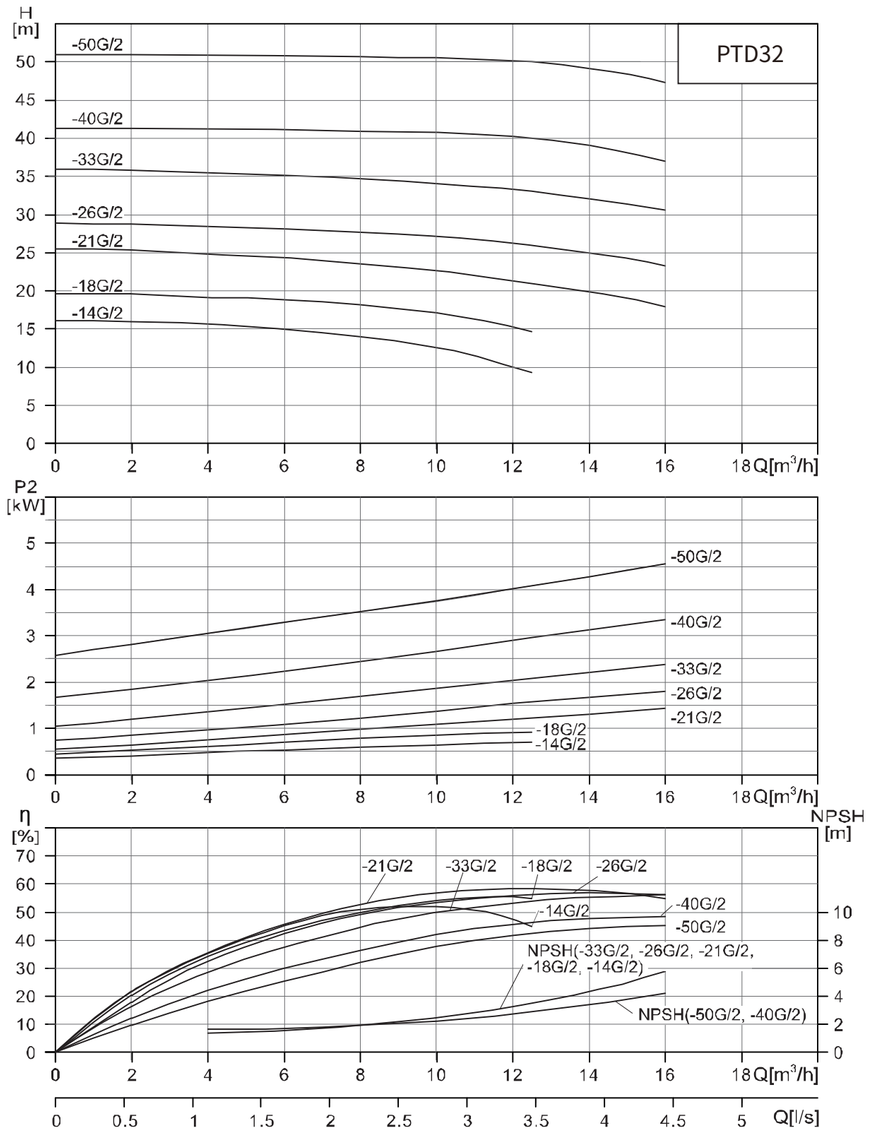

PTD

Single Stage Pipeline Circulating Pump

0.75~260KW/50Hz:3000/1500rpm

PTD32

Model	Power kW	Q m³/h	2	4	6	8	10	12.5	14	16
PTD32-14G/2	0.75	H(m)	16	15.7	15.1	14	12.6	9.3		
PTD32-18G/2	1.1	H(m)	19.6	19.3	18.9	118	17.2	14.6		
PTD32-21G/2	1.5	H(m)	25.3	24.9	24.3	23.6	22.6	21	19.9	18
PTD32-26G/2	2.2	H(m)	28.7	28.4	28.1	27.7	27.1	26	25	23.2
PTD32-33G/2	3	H(m)	35.8	35.5	35.1	34.7	34.1	33	32.1	30.6
PTD32-40G/2	4	H(m)	41.3	41.2	41.1	41	40.7	40	39.1	37
PTD32-50G/2	5.5	H(m)	51	50.9	50.8	50.7	50.5	50	49.2	47.3

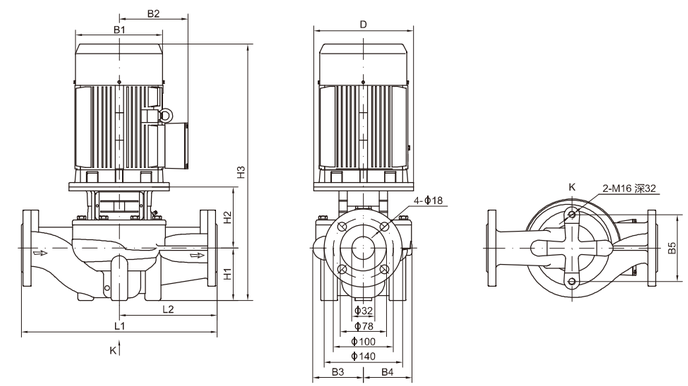

INSTALLATION SIZE DATA PARAMETERS

Model	D mm	B1 mm	B2 mm	B3 mm	B4 mm	B5 mm	H1 mm	H2 mm	H3 mm	L1 mm	L2 mm	kg
PTD32-14G/2	120	151	125	101	101	144	90	135	469	320	160	33
PTD32-18G/2	120	151	125	101	101	144	90	135	469	320	160	34
PTD32-21G/2	140	171	137	101	101	144	90	137	514	320	160	38
PTD32-26G/2	140	171	137	101	101	144	90	137	514	320	160	42
PTD32-33G/2	160	196	150	109	109	144	90	145	572	340	170	52
PTD32-40G/2	160	214	169	128	128	144	100	151	693	360	180	55
PTD32-50G/2	200	257	190	128	128	144	100	173	656	360	180	84

PERFORMANCE CURVE

2900rpm

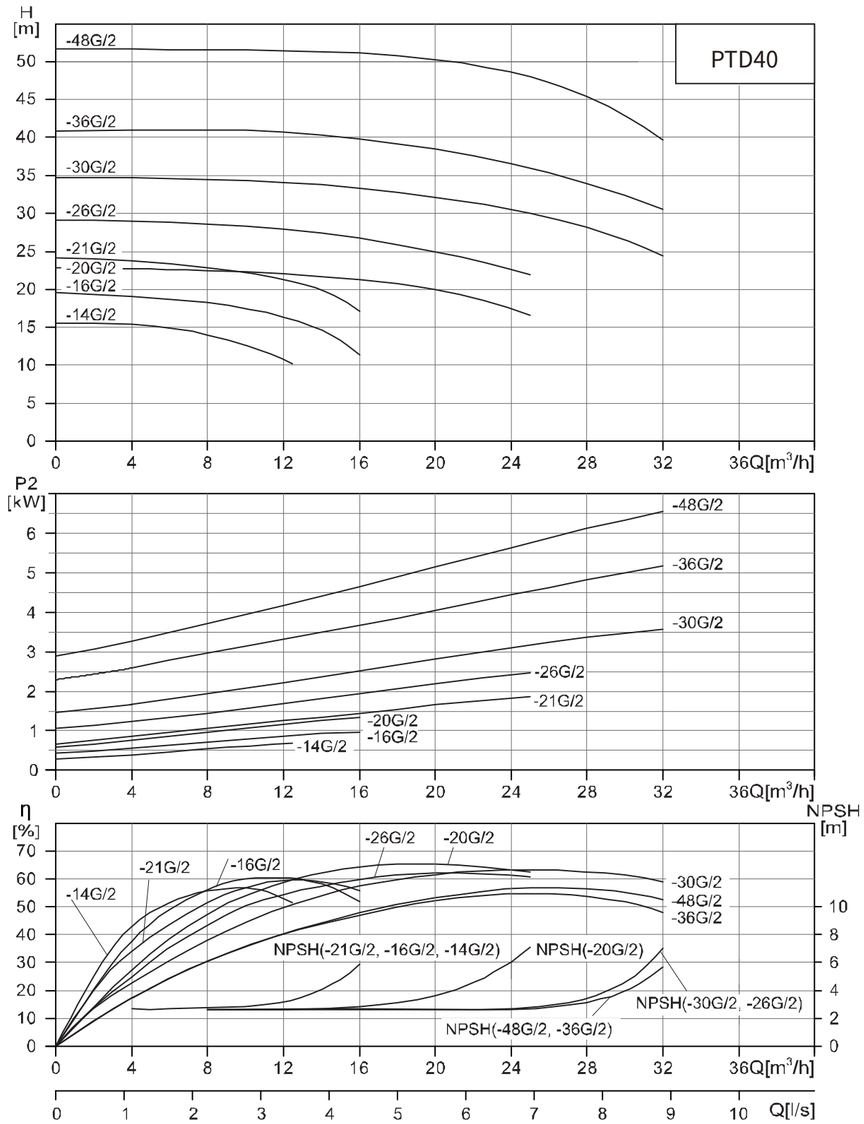

PTD

Single Stage Pipeline Circulating Pump

0.75~260KW/50Hz:3000/1500rpm

PTD40

Model	Power kW	Q m³/h	4	8	12.5	16	20	25	28	32
PTD40-14G/2	0.75	H(m)	15.4	14	10.2					
PTD40-16G/2	1.1	H(m)	19.1	18.2	16	11.4				
PTD40-21G/2	1.5	H(m)	23.8	22.9	21	17.1				
PTD40-20G/2	2.2	H(m)	22.7	22.5	22	21.3	20	16.6		
PTD40-26G/2	3	H(m)	29	28.6	27.8	26.7	25	21.9		
PTD40-30G/2	4	H(m)	34.7	34.5	34.1	33.4	32.2	30	28.2	24.5
PTD40-36G/2	5.5	H(m)	40.9	41	40.7	39.8	38.5	36	34.1	30.5
PTD40-48G/2	7.5	H(m)	51.6	51.6	51.4	51.1	50.3	48	45.4	39.6

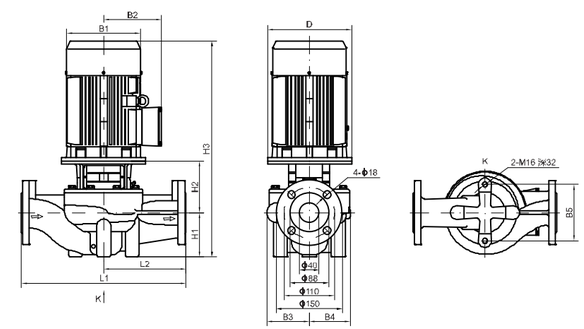

INSTALLATION SIZE DATA PARAMETERS

Model	D mm	B1 mm	B2 mm	B3 mm	B4 mm	B5 mm	H1 mm	H2 mm	H3 mm	L1 mm	L2 mm	kg
PTD40-14G/2	122	151	125	98	95	120	68	139	451	320	160	31
PTD40-16G/2	122	151	125	98	95	120	68	139	451	320	160	32
PTD40-21G/2	140	171	137	98	95	120	68	149	504	320	160	38
PTD40-20G/2	140	171	137	105	95	144	85	144	516	320	160	43
PTD40-26G/2	160	196	150	116	109	144	85	156	578	340	170	54
PTD40-30G/2	160	214	169	116	109	144	85	156	583	340	170	62
PTD40-36G/2	200	257	190	133	128	144	90	181	654	380	190	85
PTD40-48G/2	200	257	190	133	128	144	90	181	654	380	190	94

PERFORMANCE CURVE

2900rpm

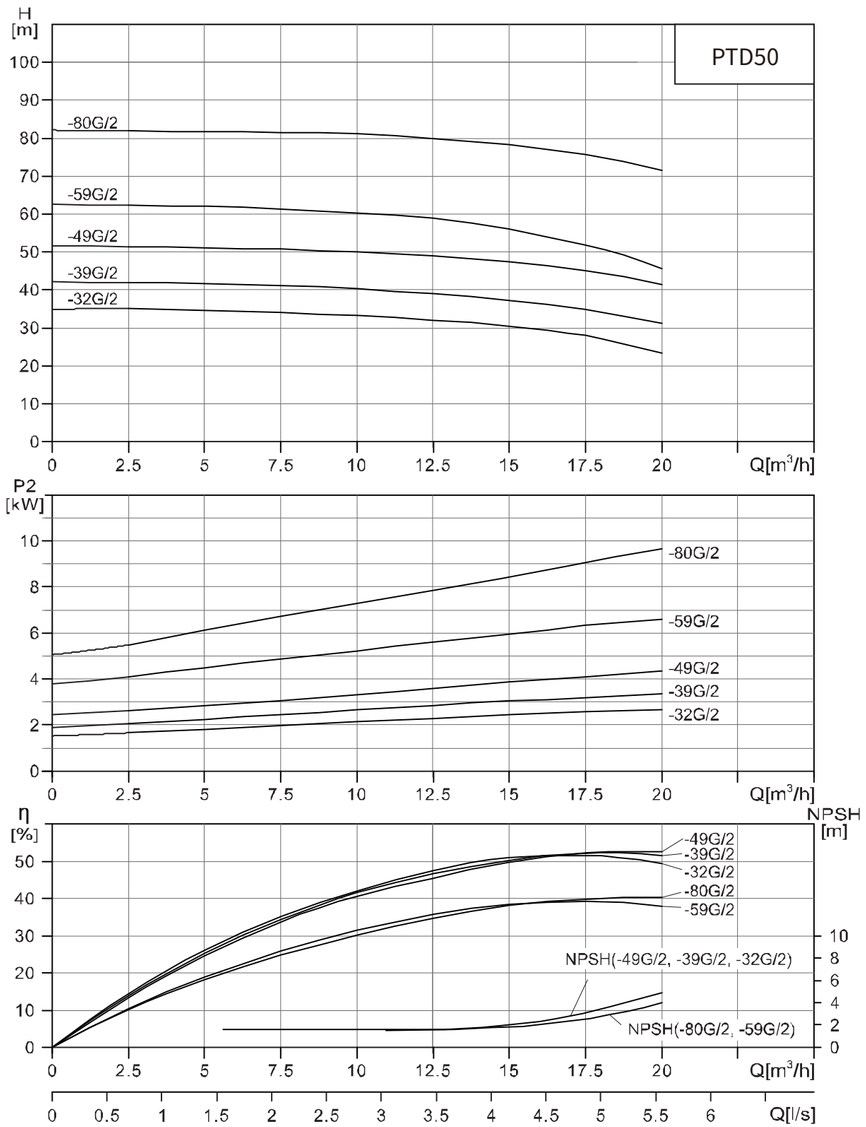

PTD

Single Stage Pipeline Circulating Pump

0.75~260KW/50Hz:3000/1500rpm

PTD50

Model	Power kW	Q m³/h	2.5	5	7.5	10	12.5	15	17.5	20
PTD50-32G/2	3	H(m)	35	34.6	34	33.2	33	30.5	27.9	23.3
PTD50-39G/2	4	H(m)	41.9	41.7	41.3	40.2	39	37.2	34.8	31.2
PTD50-49G/2	5.5	H(m)	51.6	51.2	50.7	50	49	47.5	45.1	41.5
PTD50-59G/2	7.5	H(m)	62.4	62.1	61.4	60.3	59	56.1	51.9	45.7
PTD50-80G/2	11	H(m)	81.9	81.7	81.5	81.1	80	78.3	75.7	71.6

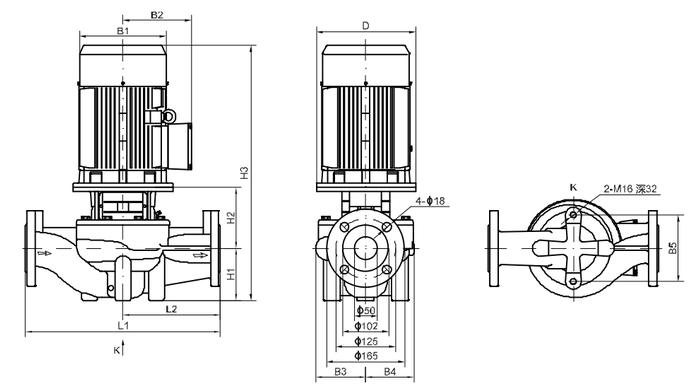

INSTALLATION SIZE DATA PARAMETERS

Model	D mm	B1 mm	B2 mm	B3 mm	B4 mm	B5 mm	H1 mm	H2 mm	H3 mm	L1 mm	L2 mm	kg
PTD50-32G/2	160	196	150	128	128	144	105	150	592	400	200	64
PTD50-39G/2	160	214	169	128	128	144	105	150	597	400	200	71
PTD50-49G/2	200	257	190	128	128	144	105	172	660	400	200	88
PTD50-59G/2	200	257	190	153	163	144	105	178	666	440	220	112
PTD50-80G/2	350	314	261	153	163	144	105	222	827	440	220	184

PERFORMANCE CURVE

2900rpm

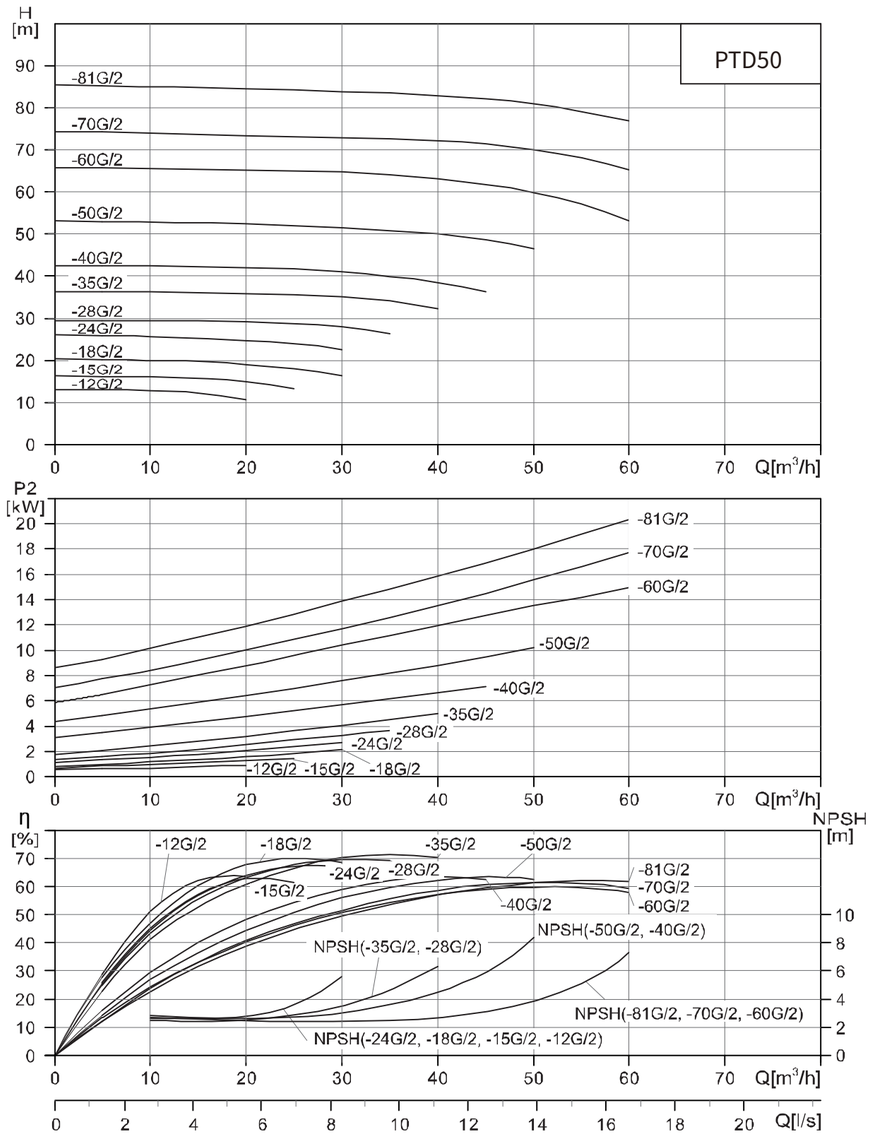

PTD

Single Stage Pipeline Circulating Pump

0.75~260KW/50Hz:3000/1500rpm

PTD50

Model	Power kW	Q m³/h	5	10	15	20	25	30	35	40	45	50	60
PTD50-12G/2	1.1	H(m)	13	12.9	12	10.7							
PTD50-15G/2	1.5	H(m)	16.1	16.1	15.6	15	13.3						
PTD50-18G/2	2.2	H(m)	20.2	20	19.6	19	18	16.4					
PTD50-24G/2	3	H(m)	25.9	25.7	25.2	24.8	24	22.6					
PTD50-28G/2	4	H(m)	29.5	29.5	29.3	29.2	28.8	28	26.4				
PTD50-35G/2	5.5	H(m)	36.3	36.2	36	35.9	35.5	35	34.1	32.2			
PTD50-40G/2	7.5	H(m)	42.5	42.4	42.2	42.1	41.7	41	40	38.5	36.4		
PTD50-50G/2	11	H(m)	53	52.9	52.6	52.4	52	51.5	50.9	50	48.7	48.4	
PTD50-60G/2	15	H(m)	65.8	65.7	65.7	65.6	65.3	64.7	63.9	62.8	61.6	60	53.2
PTD50-70G/2	18.5	H(m)	73.7	73.6	73.4	73.3	73.1	72.9	72.5	72	71.2	70	65.4
PTD50-81G/2	22	H(m)	85.5	85.3	85	84.8	84.5	84	83.5	82.8	82.1	81	77.1

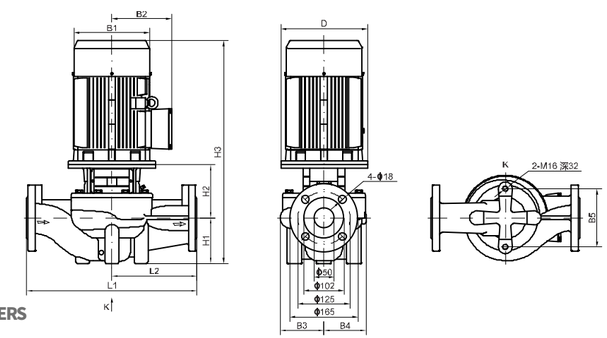

INSTALLATION SIZE DATA PARAMETERS

Model	D mm	B1 mm	B2 mm	B3 mm	B4 mm	B5 mm	H1 mm	H2 mm	H3 mm	L1 mm	L2 mm	kg
PTD50-12G/2	120	151	125	114	101	144	105	135	484	340	170	37
PTD50-15G/2	140	171	137	114	101	144	105	137	529	340	170	42
PTD50-18G/2	140	171	137	114	101	144	105	137	529	340	170	45
PTD50-24G/2	160	196	150	114	101	144	105	147	589	340	170	55
PTD50-28G/2	160	214	169	114	109	144	105	152	599	340	170	54
PTD50-35G/2	200	257	190	118	109	144	105	176	664	340	170	81
PTD50-40G/2	200	257	190	142	138	144	105	175	663	400	200	98
PTD50-50G/2	350	314	261	142	138	144	105	225	830	400	200	173
PTD50-60G/2	350	314	261	171	163	144	115	225	840	440	220	196
PTD50-70G/2	350	314	261	171	163	144	115	225	884	440	220	174
PTD50-81G/2	350	355	273	171	163	144	115	225	917	440	220	256

PERFORMANCE CURVE

2900rpm

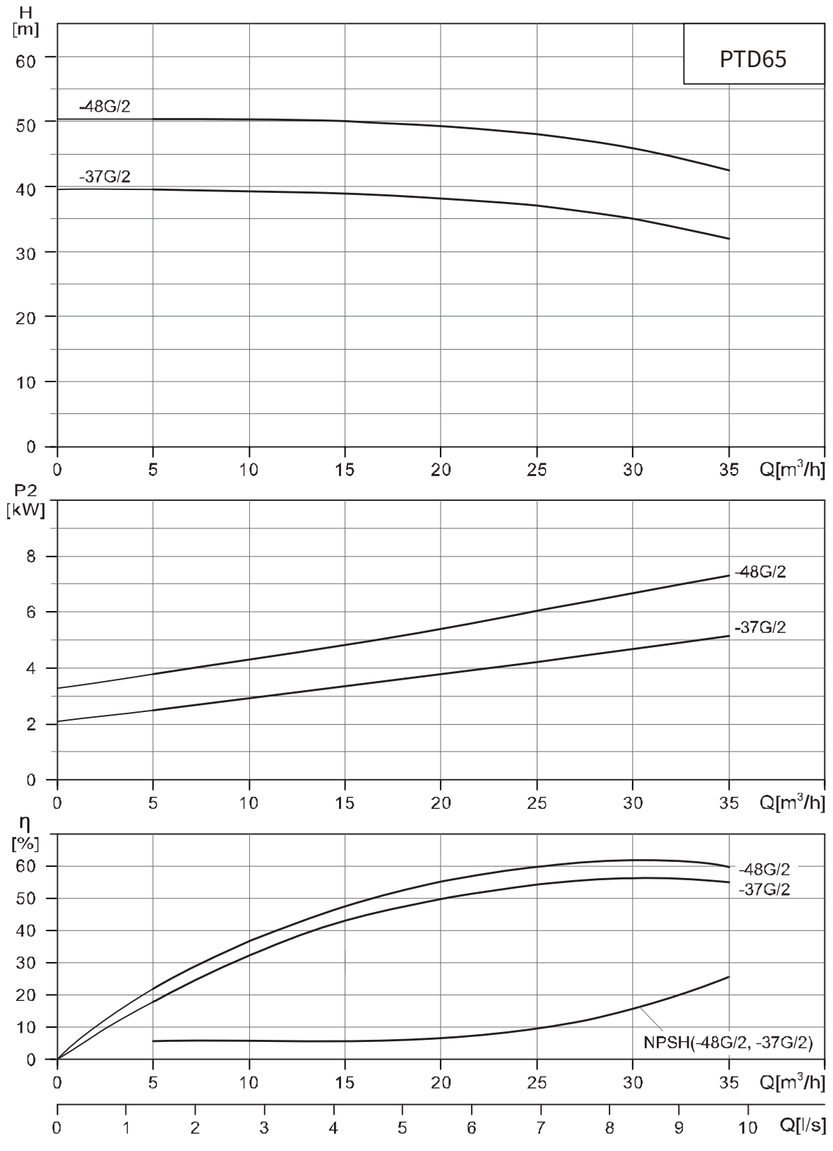

PTD

Single Stage Pipeline Circulating Pump

0.75~260KW/50Hz:3000/1500rpm

PTD65

Model	Power kW	Q m³/h	5	10	15	20	25	30	35
PTD65-37G/2	5.5	H(m)	39.6	39.3	39	38.2	37	35	32.1
PTD65-48G/2	7.5	H(m)	50.4	50.3	50	49.3	48	45.9	42.6

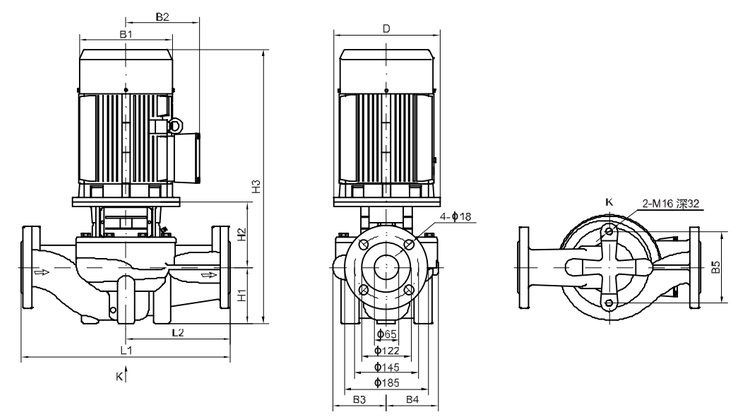

INSTALLATION SIZE DATA PARAMETERS

Model	D mm	B1 mm	B2 mm	B3 mm	B4 mm	B5 mm	H1 mm	H2 mm	H3 mm	L1 mm	L2 mm	kg
PTD65-37G/2	200	257	190	128	128	144	105	180	668	400	200	90
PTD65-48G/2	200	257	190	128	128	144	105	180	668	400	200	98

PERFORMANCE CURVE

2900rpm

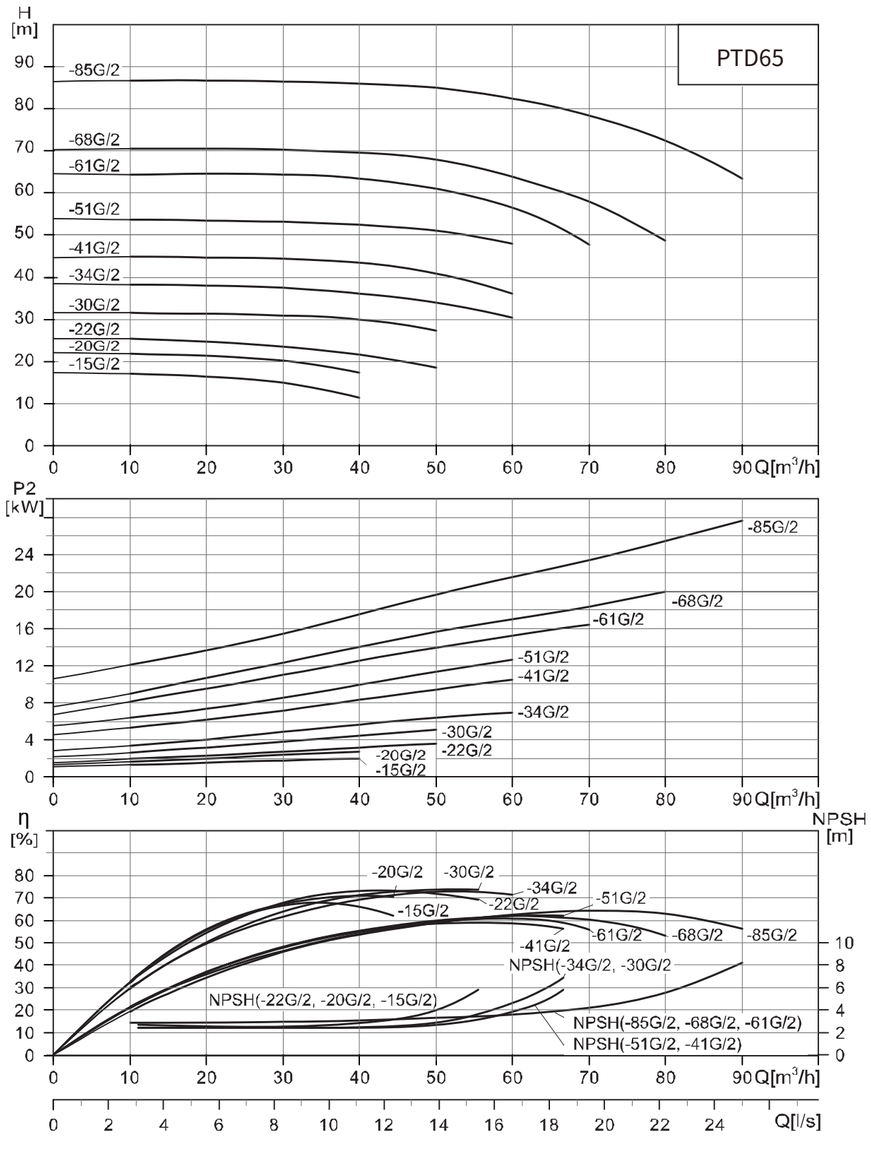

PTD

Single Stage Pipeline Circulating Pump

0.75~260KW/50Hz:3000/1500rpm

PTD65

Model	Power kW	Q m³/h	10	20	30	40	50	60	70	80	90
PTD65-15G/2	2.2	H(m)	17.1	16.4	15	11.3					
PTD65-20G/2	3	H(m)	21.8	21.2	20	17.4					
PTD65-22G/2	4	H(m)	25.1	24.8	23.9	22	18.4				
PTD65-30G/2	5.5	H(m)	31.5	31.3	31	30	27.3				
PTD65-34G/2	7.5	H(m)	38.3	38	37.4	36.1	34	30.5			
PTD65-41G/2	11	H(m)	44.8	44.7	44.4	43.5	41	36.1			
PTD65-51G/2	15	H(m)	53.7	53.5	53.1	52.4	51	48			
PTD65-61G/2	18.5	H(m)	64.5	64.6	64.4	63.5	61	56.5	47.6		
PTD65-68G/2	22	H(m)	70.5	70.5	70.3	69.6	68	63.8	58	48.6	
PTD65-85G/2	30	H(m)	86.7	86.7	86.5	86	85	82.5	78.5	72.4	63.3

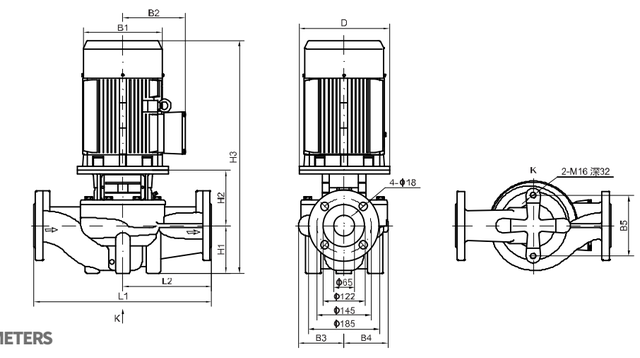

INSTALLATION SIZE DATA PARAMETERS

Model	D mm	B1 mm	B2 mm	B3 mm	B4 mm	B5 mm	H1 mm	H2 mm	H3 mm	L1 mm	L2 mm	kg
PTD65-15G/2	140	171	137	116	101	144	106	153	545	340	170	48
PTD65-20G/2	160	196	150	116	101	144	105	163	605	340	170	57
PTD65-22G/2	160	214	169	116	101	144	105	163	610	340	170	64
PTD65-30G/2	200	257	190	131	115	144	105	194	682	360	180	85
PTD65-34G/2	200	257	190	131	115	144	105	194	682	360	180	94
PTD65-41G/2	350	314	261	148	138	144	105	234	839	400	200	173
PTD65-51G/2	350	314	261	148	138	144	105	234	839	400	200	188
PTD65-61G/2	350	314	261	174	162	160	125	228	897	475	238	177
PTD65-68G/2	350	355	273	174	162	160	125	228	930	475	238	260
PTD65-85G/2	400	397	314	174	162	160	125	231	1008	475	238	322

PERFORMANCE CURVE

2900rpm

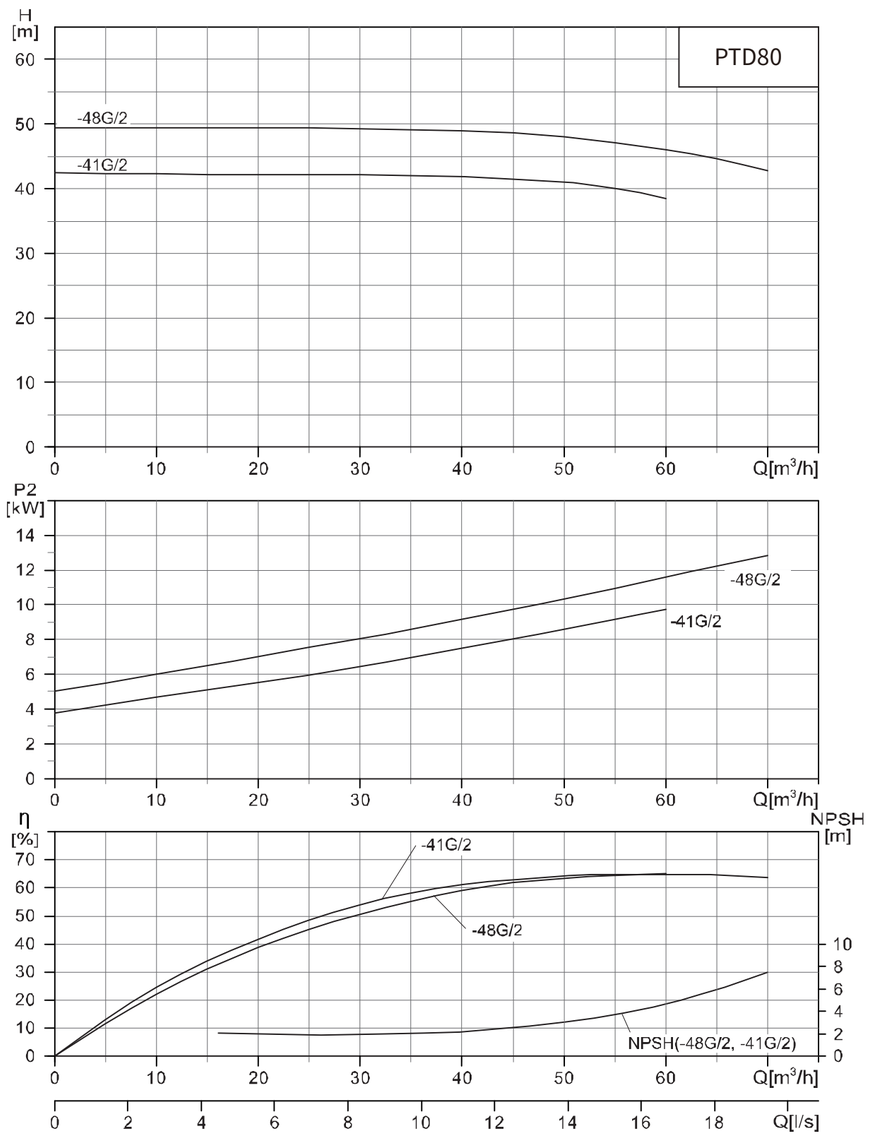

PTD

Single Stage Pipeline Circulating Pump

0.75~260KW/50Hz:3000/1500rpm

PTD80

Model	Power kW	Q m³/h	10	20	30	40	50	60	70
PTD80-41G/2	11	H(m)	42.3	42.2	42.1	41.8	41	38.4	
PTD80-48G/2	15	H(m)	49.4	49.4	49.3	49	48	46	42.8

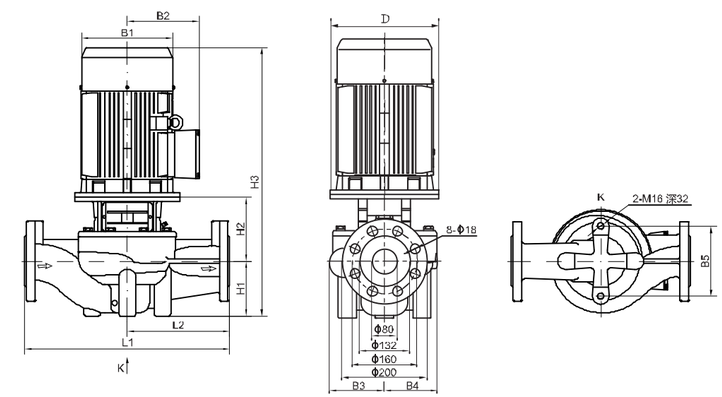

INSTALLATION SIZE DATA PARAMETERS

Model	D mm	B1 mm	B2 mm	B3 mm	B4 mm	B5 mm	H1 mm	H2 mm	H3 mm	L1 mm	L2 mm	kg
PTD80-41G/2	350	314	261	137	128	144	115	221	836	500	250	176
PTD80-48G/2	350	314	261	137	128	144	115	221	836	500	250	191

PERFORMANCE CURVE

2900rpm

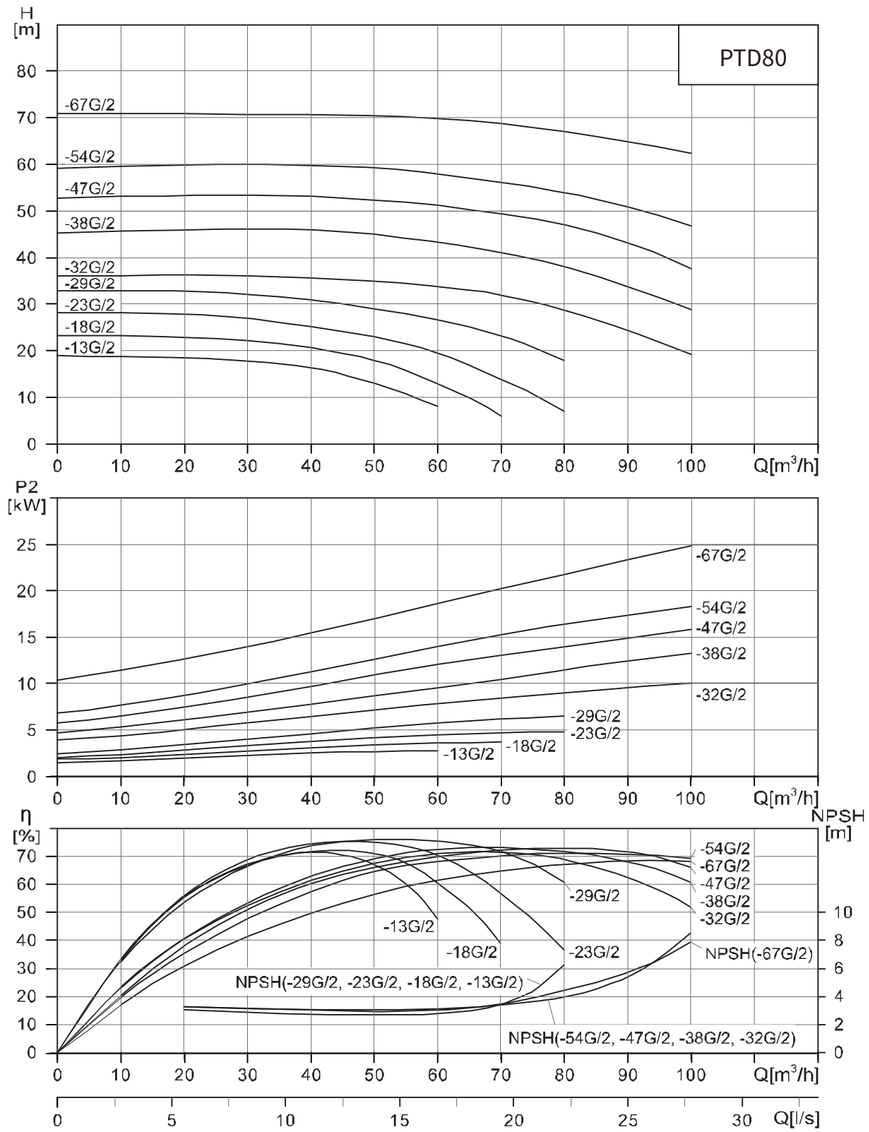

PTD

Single Stage Pipeline Circulating Pump

0.75~260KW/50Hz:3000/1500rpm

PTD80

Model	Power kW	Q m³/h	10	20	30	40	50	60	70	80	90	100
PTD80-13G/2	3	H(m)	18.9	18.6	17.8	16.3	13	8				
PTD80-18G/2	4	H(m)	23.2	23	22.2	20.6	18	12.9	6			
PTD80-23G/2	5.5	H(m)	28.2	28	27	25.2	23	19.5	13.9	7.1		
PTD80-29G/2	7.5	H(m)	33	32.8	32.1	30.9	29	26.7	23.2	17.8		
PTD80-32G/2	11	H(m)	36.2	36.2	36	35.6	34.9	33.8	32	28.7	24.4	19.3
PTD80-38G/2	15	H(m)	45.7	45.9	46.2	45.9	45	43.3	41.1	38	33.8	28.8
PTD80-47G/2	18.5	H(m)	53.2	53.4	53.4	53.2	52.4	51.2	49.4	47	43.2	37.6
PTD80-54G/2	22	H(m)	59.7	59.9	60	59.8	59.2	58	56.2	54	50.9	46.9
PTD80-67G/2	30	H(m)	71	70.9	70.8	70.6	70.4	69.9	68.7	67	65	62.3

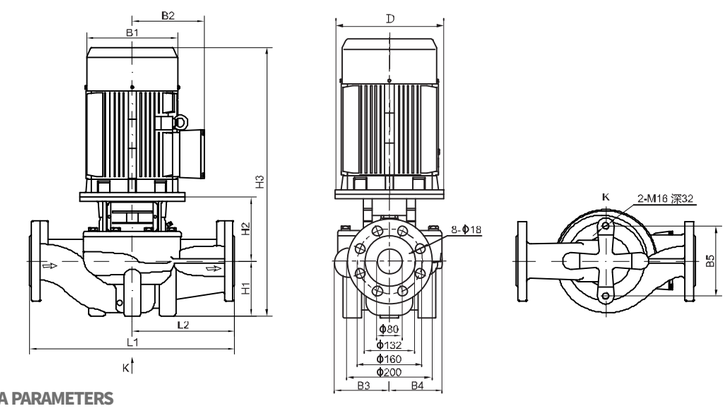

INSTALLATION SIZE DATA PARAMETERS

Model	D mm	B1 mm	B2 mm	B3 mm	B4 mm	B5 mm	H1 mm	H2 mm	H3 mm	L1 mm	L2 mm	kg
PTD80-13G/2	160	196	150	134	112	144	105	171	613	400	200	63
PTD80-18G/2	160	214	169	134	112	144	105	171	610	400	200	70
PTD80-23G/2	200	257	190	134	112	144	105	195	683	400	200	87
PTD80-29G/2	200	257	190	134	112	144	105	195	683	400	200	95
PTD80-32G/2	350	314	261	159	138	144	115	240	855	450	225	179
PTD80-38G/2	350	314	261	159	138	144	115	240	55	450	225	194
PTD80-47G/2	350	314	261	159	138	144	115	240	899	450	225	203
PTD80-54G/2	350	355	273	159	138	144	115	240	932	450	225	256
PTD80-67G/2	400	397	314	180	162	160	115	242	1009	500	250	324

PERFORMANCE CURVE

3000rpm

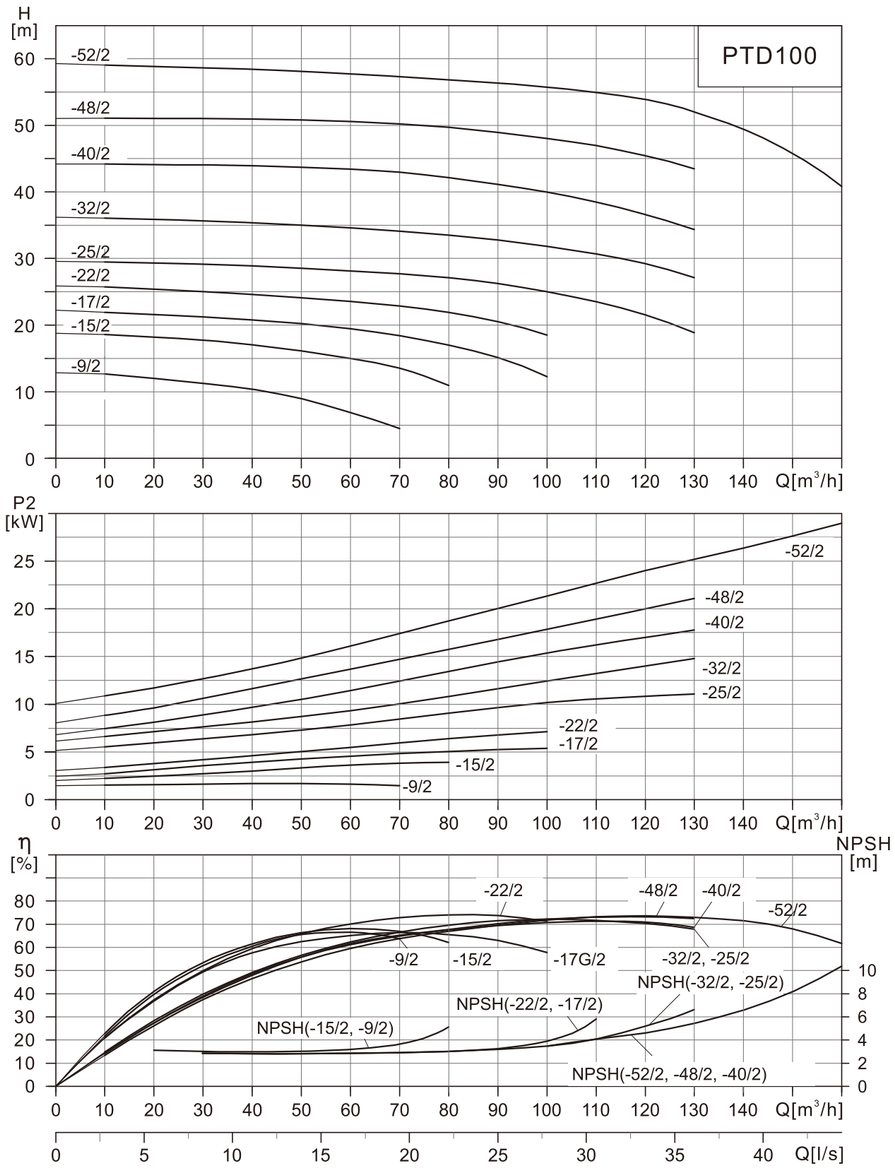

PTD

Single Stage Pipeline Circulating Pump

0.75~260KW/50Hz:3000/1500rpm

PTD100

Model	Power kW	Q m³/h	10	20	30	40	50	60	70	80	90	100	110	120	130	145	160
PTD100-9/2	2.2	H(m)	13.9	13.2	12.2	10.8	9	6.8	4.4								
PTD100-15/2	4	H(m)	18.6	18.2	17.7	17.1	16.2	15	13.4	11							
PTD100-17/2	5.5	H(m)	21.9	21.6	21.2	20.8	20	19.4	18.4	17	15.1	12.3					
PTD100-22/2	7.5	H(m)	25.7	25.5	25	24.6	24.1	23.6	22.9	21.9	20.5	19.6					
PTD100-27/2	11	H(m)	31.5	31.3	31.1	30.7	30.3	29.8	29.2	28.2	17	25.5	23.6				
PTD100-33/2	15	H(m)	37.1	37	36.8	36.6	36.2	35.8	35.3	34.7	33.9	33	31.7				
PTD100-40/2	18.5	H(m)	44.1	44.1	44	43.9	43.7	43.4	42.9	42.1	41.1	40	38.5	36.6	34.3		
PTD100-48/2	22	H(m)	51.2	51.1	51	51	50.8	50.6	50.2	49.7	48.9	48	47	45.5	43.5		
PTD100-52/2	30	H(m)	59.1	58.9	58.7	58.4	58.2	57.8	57.3	56.9	56.4	55.8	55	53.9	52	47.7	40.8

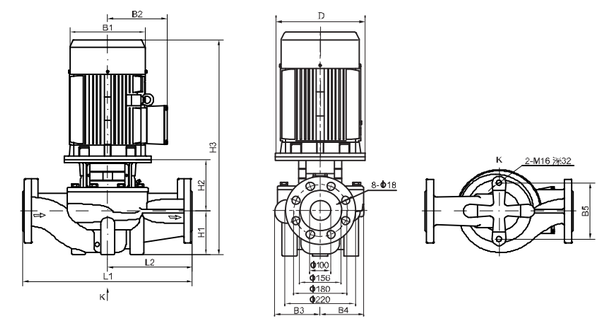

INSTALLATION SIZE DATA PARAMETERS

Model	D mm	B1 mm	B2 mm	B3 mm	B4 mm	B5 mm	H1 mm	H2 mm	H3 mm	L1 mm	L2 mm	kg
PTD100-9/2	140	171	137	134	101	160	105	178	573	450	225	65
PTD100-15/2	160	214	169	134	101	160	107	190	650	450	225	83
PTD100-17/2	200	257	190	146	117	144	120	215	745	500	250	119
PTD100-22/2	200	257	190	146	117	144	120	215	745	500	250	122
PTD100-27/2	350	314	261	147	147	144	140	260	900	550	275	183
PTD100-33/2	350	314	261	147	147	144	140	260	900	550	275	194
PTD100-40/2	350	314	261	181	181	230	140	257	960	550	275	224
PTD100-48/2	350	355	273	181	181	230	140	257	985	550	275	260
PTD100-52/2	400	397	314	181	181	230	140	257	1060	550	275	318

PERFORMANCE CURVE

1500rpm

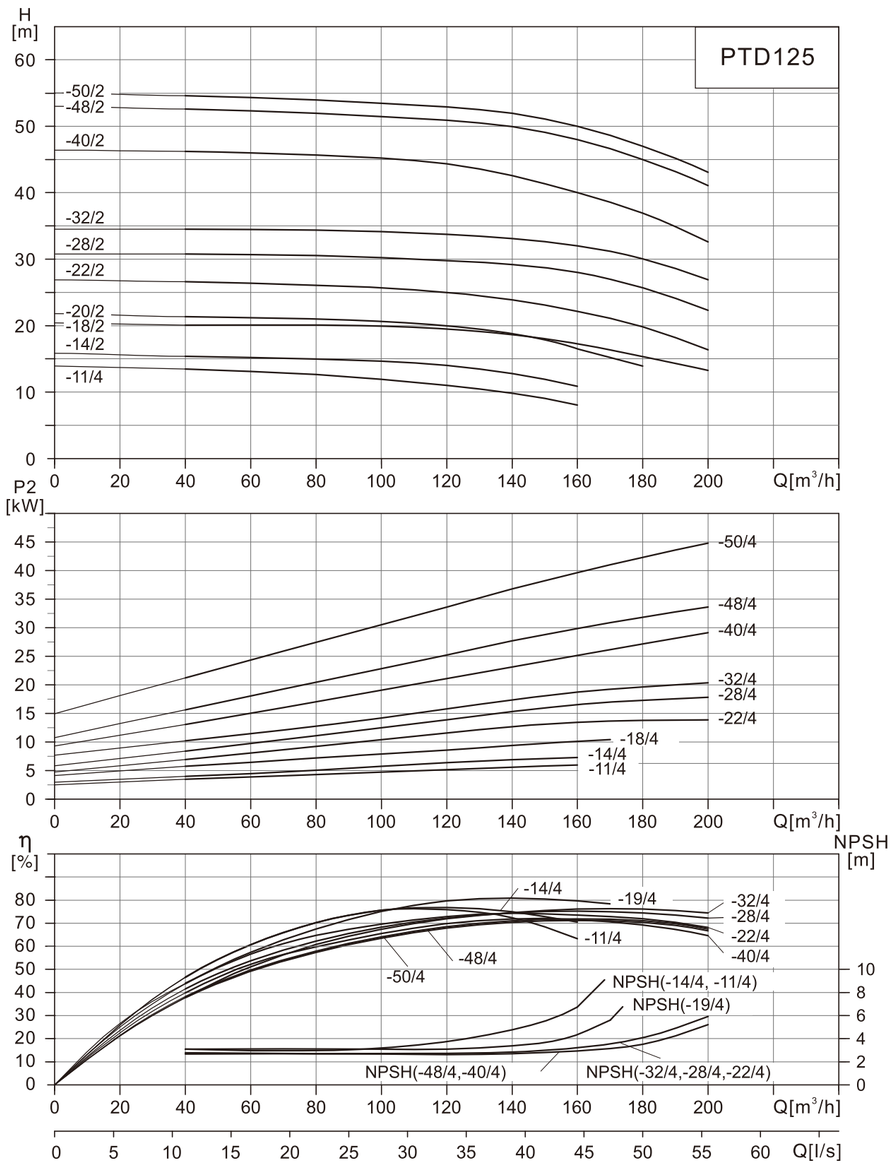

PTD

Single Stage Pipeline Circulating Pump

0.75~260KW/50Hz:3000/1500rpm

PTD125

Model	Power kW	Q m³/h	40	60	80	100	120	140	160	170	180	200
PTD125-11/4	5.5	H(m)	13.4	13.1	12.6	11.9	11	9.8	8.1			
PTD125-14/4	7.5	H(m)	15.4	15.2	15	14.7	14	12.8	10.9			
PTD125-18/4	11	H(m)	21.5	21.3	21.1	20.7	19.9	19	18	16.5		
PTD125-20/4	11	H(m)	22	21.6	21.3	20.8	20	19	17.5	15		
PTD125-22/4	15	H(m)	26.7	26.5	26.2	25.7	24.9	23.7	22	20.9	19.8	16.7
PTD125-28/4	18.5	H(m)	30.9	30.8	30.7	30.5	30.1	29.3	28	26.9	25.8	22.2
PTD125-32/4	22	H(m)	34.6	34.6	34.5	34.4	34	33.3	32	31.1	30.2	27.3
PTD125-40/4	30	H(m)	46.2	46	45.7	45.2	44.3	42.5	40	38.5	36.9	32.5
PTD125-48/4	37	H(m)	52.6	52.3	51.9	51.5	50.9	49.9	48	46.6	45	41.1
PTD125-50/4	45	H(m)	55	54.5	54.2	53.2	52	50.8	50	48.2	47.1	43.2

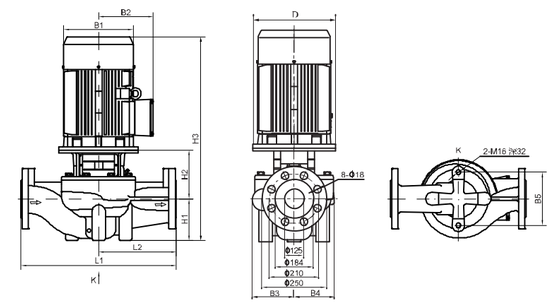

INSTALLATION SIZE DATA PARAMETERS

Model	D mm	B1 mm	B2 mm	B3 mm	B4 mm	B5 mm	H1 mm	H2 mm	H3 mm	L1 mm	L2 mm	kg
PTD125-11/4	200	257	190	216	162	230	215	228	873	620	310	166
PTD125-14/4	200	257	190	216	162	230	215	228	873	620	310	179
PTD125-18/4	350	314	261	211	178	230	215	276	989	800	400	257
PTD125-20/4	350	314	261	211	178	230	215	276	1012	800	400	289
PTD125-22/4	350	314	261	236	208	230	215	292	1047	800	400	301
PTD125-28/4	350	355	273	236	208	230	215	292	1084	800	400	321
PTD125-32/4	350	355	273	236	208	230	215	292	1122	800	400	356
PTD125-40/4	400	397	314	272	233	230	215	315	1179	800	400	442
PTD125-48/4	400	445	334	272	233	230	215	315	1204	800	400	498
PTD125-50/4	400	445	334	272	233	230	215	315	1311	800	400	505

PERFORMANCE CURVE

1500rpm

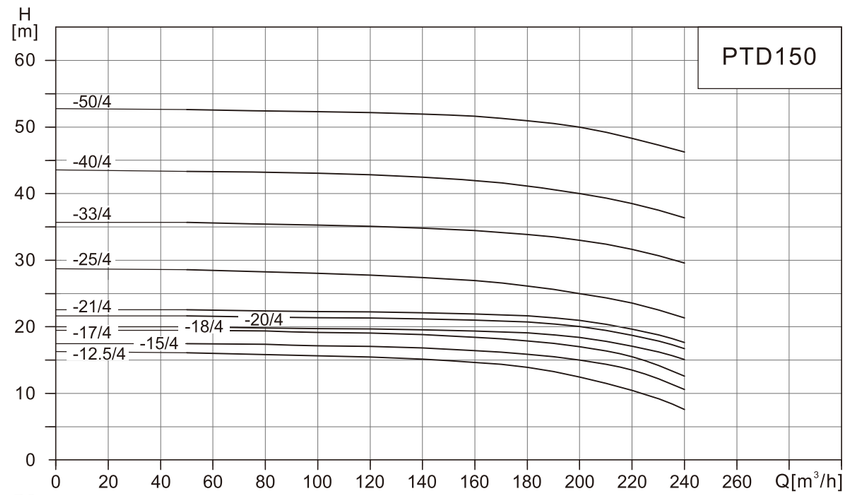

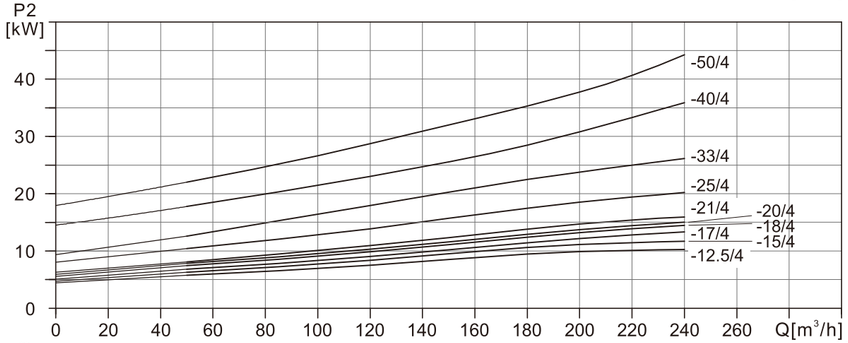

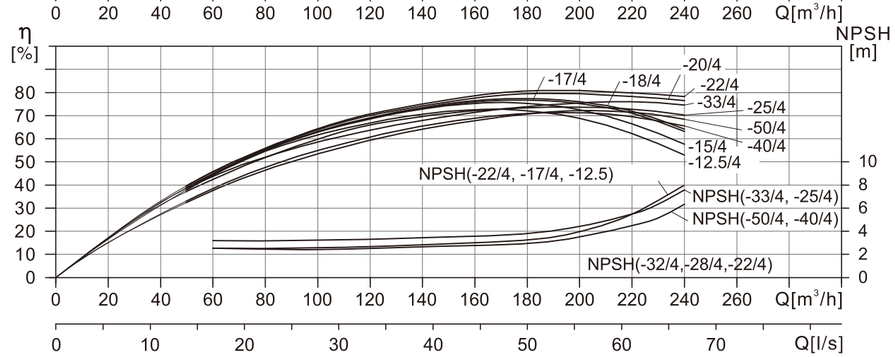

PTD

Single Stage Pipeline Circulating Pump

0.75~260KW/50Hz:3000/1500rpm

PTD150

Model	Power kW	Q m³/h	50	80	100	120	140	160	180	200	220	240
PTD150-12.5/4	11	H(m)	16.1	15.8	15.6	15.4	15.1	14.6	13.9	12.5	10.4	7.6
PTD150-15/4	11	H(m)	17.5	17.3	17	16.6	16.2	15.8	15.5	15	13	10.8
PTD150-17/4	15	H(m)	19.5	19.4	19.2	19.1	18.8	18.4	17.9	17	15.5	12.6
PTD150-18/4	15	H(m)	20.1	19.8	19.5	19.3	19	18.5	18.2	18	16.5	15
PTD150-20/4	18.5	H(m)	22.5	22.2	21.8	21.5	21.3	20.9	20.6	20.3	20	16.5
PTD150-21/4	18.5	H(m)	23.6	23.4	23.4	23.2	23.1	23	22.7	21	20.7	18.7
PTD150-25/4	22	H(m)	28.1	28	27.9	27.7	27.3	26.8	26.1	25	23.5	21.3
PTD150-33/4	30	H(m)	35.5	35.4	35.3	35.1	34.8	34.4	33.9	33	31.5	29.6
PTD150-40/4	37	H(m)	43.1	43	42.9	42.7	42.4	41.9	41.1	40	38.4	36.2
PTD150-50/4	45	H(m)	52.4	52.2	52.1	51.9	51.7	51.4	50.9	50	48.7	46.7

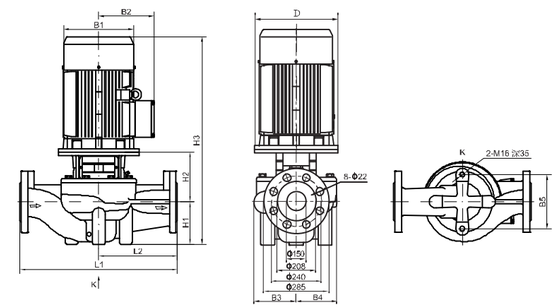

INSTALLATION SIZE DATA PARAMETERS

Model	D mm	B1 mm	B2 mm	B3 mm	B4 mm	B5 mm	H1 mm	H2 mm	H3 mm	L1 mm	L2 mm	kg
PTD150-12.5/4	350	314	261	217	180	230	215	272	1003	800	400	275
PTD150-15/4	350	314	261	217	180	230	215	272	1022	800	400	277
PTD150-17/4	350	314	261	217	180	230	215	272	1045	800	400	278
PTD150-18/4	350	314	261	217	180	230	215	272	1065	800	400	285
PTD150-20/4	350	314	261	217	180	230	215	272	1079	800	400	300
PTD150-21/4	350	355	273	217	180	230	215	272	1082	800	400	313
PTD150-25/4	350	355	273	238	208	230	215	269	1099	800	400	354
PTD150-33/4	400	397	314	238	208	230	215	269	1133	800	400	406
PTD150-40/4	450	445	334	267	248	230	230	288	1192	900	450	511
PTD150-50/4	450	445	334	267	248	230	230	288	1215	900	450	548

PERFORMANCE CURVE

1480 rpm

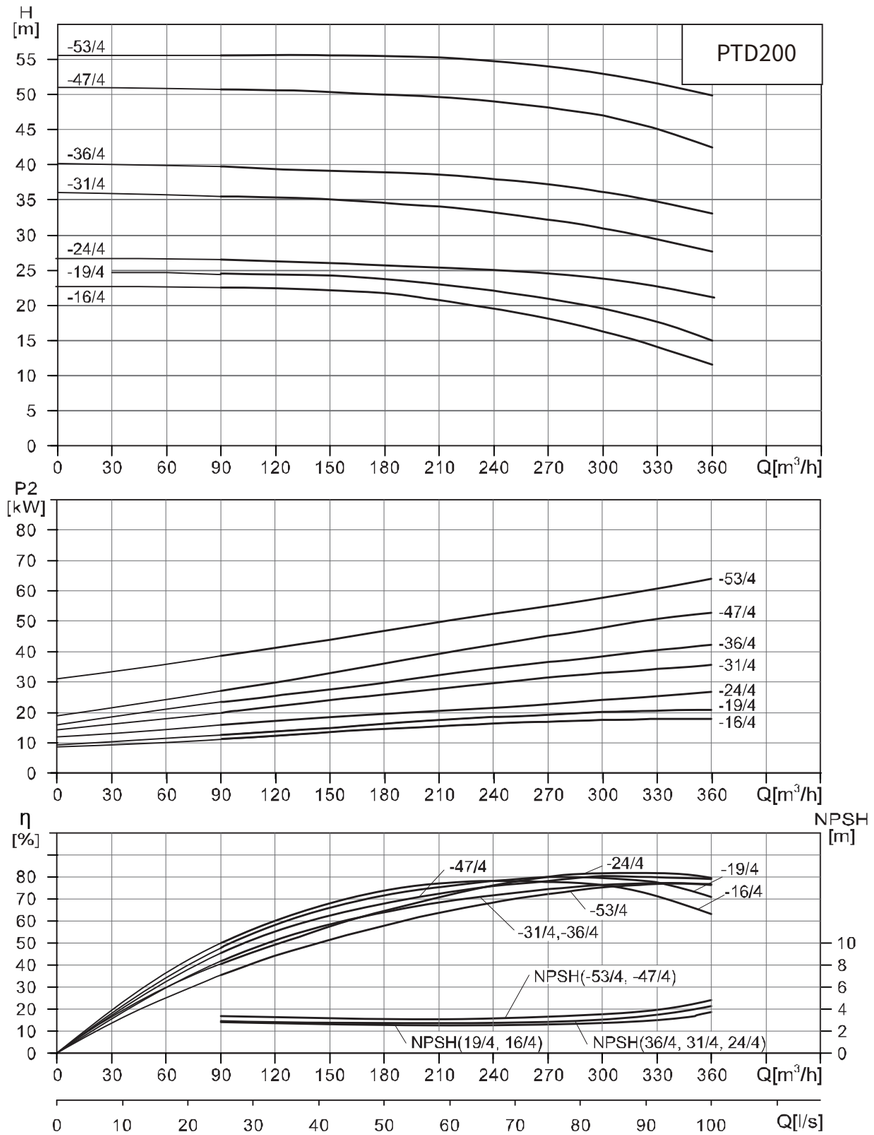

PTD

Single Stage Pipeline Circulating Pump

0.75~260KW/50Hz:3000/1500rpm

PTD200

Model	Power kW	Q m³/h	90	120	150	180	210	240	270	300	330	360
PTD200-16/4	18.5	H(m)	22.6	22.4	22.2	21.7	20.7	19.4	18.1	16	14	11.5
PTD200-19/4	22	H(m)	24.4	24.3	24.2	23.7	23	22	20.9	19	17.6	15
PTD200-24/4	30	H(m)	26.1	26	25.8	25.7	25.4	25.1	24.6	24	23.1	21.5
PTD200-31/4	37	H(m)	35.4	35.3	35	34.5	33.9	33.2	32.2	31	29.3	27.6
PTD200-36/4	45	H(m)	39.6	39.4	39.1	38.8	38.5	37.9	37	36	34.7	33
PTD200-47/4	55	H(m)	50.6	50.5	50.2	49.8	49.5	48.9	48	47	44.9	42.4
PTD200-53/4	72	H(m)	55.7	55.7	55.7	55.5	55.3	54.8	54	53	51.6	50

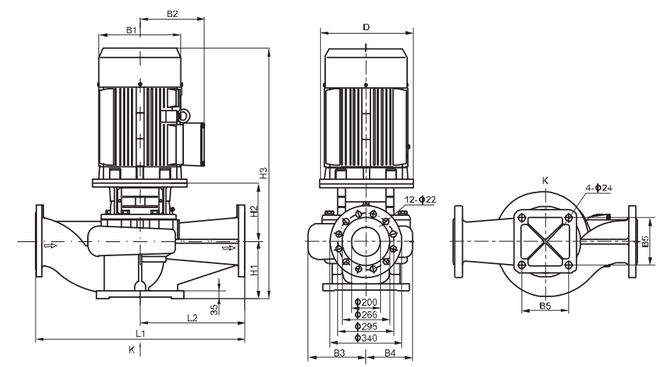

INSTALLATION SIZE DATA PARAMETERS

Model	D mm	B1 mm	B2 mm	B3 mm	B4 mm	B5 mm	H1 mm	H2 mm	H3 mm	L1 mm	L2 mm	kg
PTD200-16/4	350	355	273	278	219	360	270	415	1262	1000	500	417
PTD200-19/4	350	355	273	278	219	360	270	415	1300	1000	500	434
PTD200-24/4	400	397	314	303	252	360	270	415	1337	1100	550	584
PTD200-31/4	450	445	334	303	252	360	270	445	1389	1100	550	602
PTD200-36/4	450	445	334	303	252	360	270	445	1412	1100	550	648
PTD200-47/4	550	484	367	315	269	360	270	457	1500	1100	550	785
PTD200-53/4	550	547	407	315	269	360	270	457	1587	1100	550	952

PERFORMANCE CURVE

1480 rpm

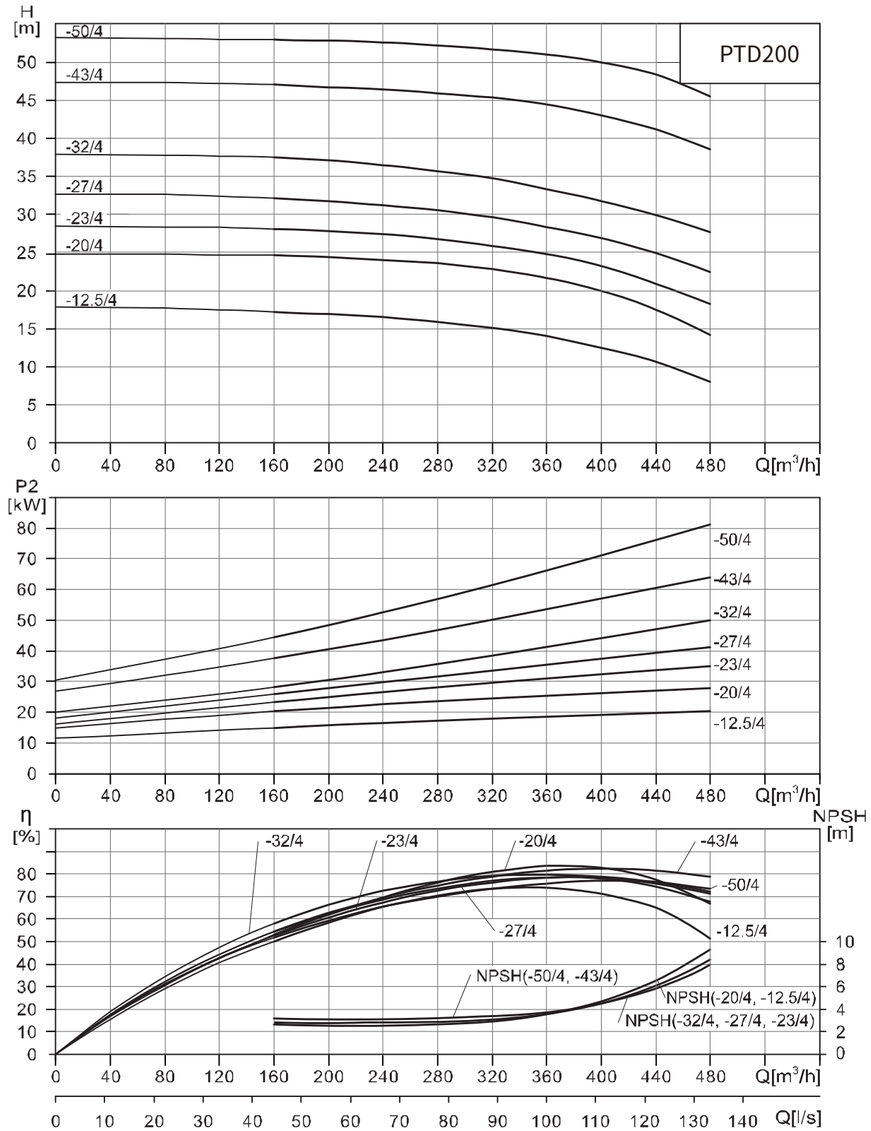

PTD

Single Stage Pipeline Circulating Pump

0.75~260KW/50Hz:3000/1500rpm

PTD200

Model	Power kW	Q m³/h	160	200	240	280	320	360	400	440	480
PTD200-12.5/4	22	H(m)	17.2	16.9	16.5	15.9	15.1	14	12.5	10.7	8
PTD200-20/4	30	H(m)	24.6	24.4	24	23.6	22.8	21.7	20	17.5	14.2
PTD200-23/4	37	H(m)	28.1	27.8	27.4	26.8	25.9	24.8	23	20.9	18.2
PTD200-27/4	45	H(m)	32.1	31.7	31.2	30.5	29.6	28.4	17	24.9	22.5
PTD200-32/4	55	H(m)	37.5	37.1	36.5	35.7	34.7	33.3	32	29.9	27.7
PTD200-43/4	75	H(m)	47	46.7	46.4	45.9	45.3	44.4	43	41.1	38.6
PTD200-50/4	90	H(m)	52.9	52.8	52.6	52.2	51.7	51	50	48.3	45.5

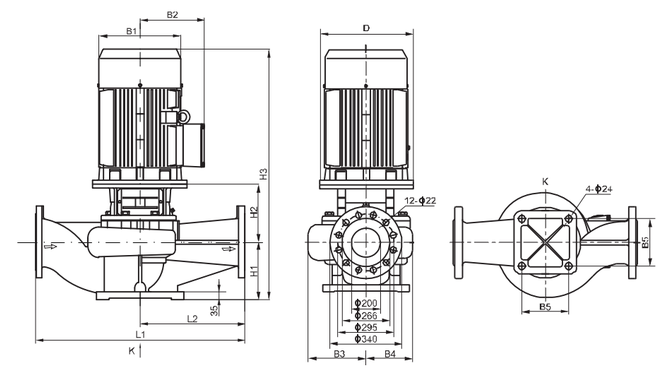

INSTALLATION SIZE DATA PARAMETERS

Model	D mm	B1 mm	B2 mm	B3 mm	B4 mm	B5 mm	H1 mm	H2 mm	H3 mm	L1 mm	L2 mm	kg
PTD200-12.5/4	350	355	273	278	219	360	270	415	1300	1000	500	432
PTD200-20/4	400	397	314	278	219	360	270	415	1337	1000	500	535
PTD200-23/4	450	445	334	303	252	360	270	445	1389	1100	550	602
PTD200-27/4	450	445	334	303	252	360	270	445	1412	1100	550	873
PTD200-32/4	550	484	367	303	252	360	270	445	1488	1100	550	788
PTD200-43/4	550	547	407	315	269	360	270	457	1587	1100	550	978
PTD200-50/4	550	547	407	315	269	360	270	457	1607	1100	550	975

PERFORMANCE CURVE

1480 rpm

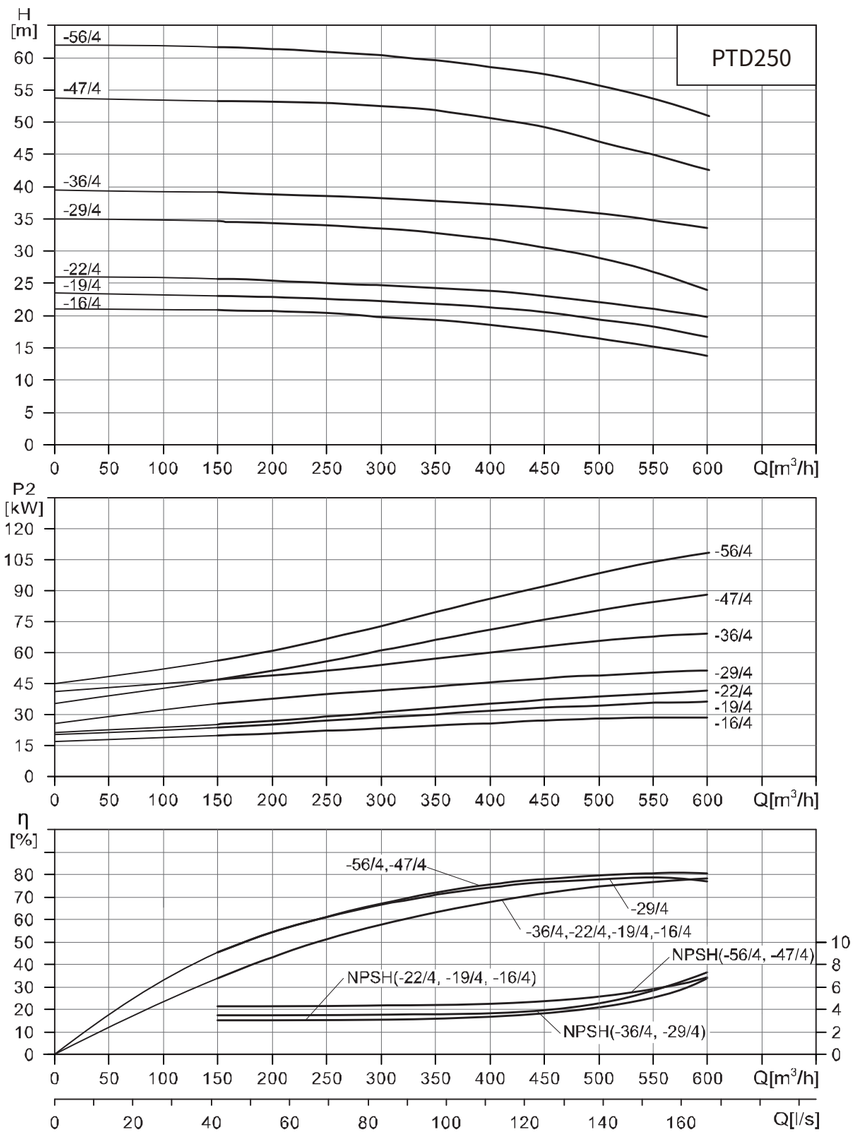

PTD

Single Stage Pipeline Circulating Pump

0.75~260KW/50Hz:3000/1500rpm

PTD250

Model	Power kW	Q m³/h	150	200	250	300	350	400	450	500	550	600
PTD250-16/4	30	H(m)	20.5	20.4	20.1	19.6	19	18.2	17.3	16	14.7	13.3
PTD250-19/4	37	H(m)	22.7	22.4	22.1	21.7	21.3	20.8	20.1	19	17.9	16.6
PTD250-22/4	45	H(m)	25.7	25.3	25.1	24.7	24.3	23.8	23.1	22	21	19.7
PTD250-29/4	55	H(m)	34.6	34.4	36	34.4	32.6	31.8	30.6	29	26.8	23.9
PTD250-36/4	75	H(m)	39.1	38.8	38.5	38.2	37.8	37.3	36.8	36	34.3	32.5
PTD250-47/4	90	H(m)	53.3	53.1	52.9	52.4	51.8	50.6	49.2	47	45	42.5
PTD250-56/4	110	H(m)	61.6	61.4	60.9	60.2	59.5	58.6	57.4	56	53.8	51

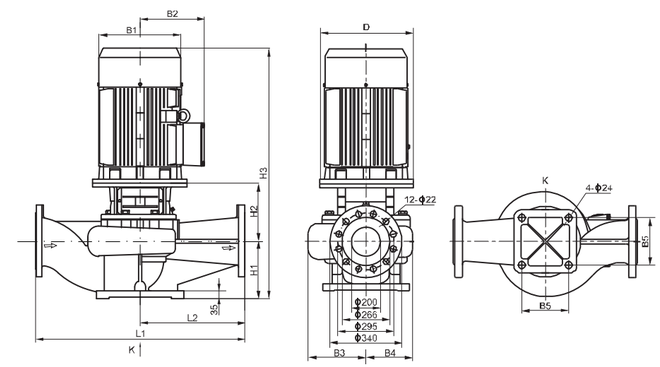

INSTALLATION SIZE DATA PARAMETERS

Model	D mm	B1 mm	B2 mm	B3 mm	B4 mm	B5 mm	H1 mm	H2 mm	H3 mm	L1 mm	L2 mm	kg
PTD250-16/4	400	397	314	316	243	390	300	465	1417	1100	550	596
PTD250-19/4	450	445	334	316	243	390	300	495	1469	1100	550	611
PTD250-22/4	450	445	334	316	243	390	300	495	1492	1100	550	682
PTD250-29/4	550	484	367	329	264	440	300	607	1580	1100	550	773
PTD250-36/4	550	547	407	329	264	440	300	507	1667	1100	550	978
PTD250-47/4	550	547	407	347	292	440	305	4B5	1670	1200	600	1085
PTD250-56/4	660	645	535	347	292	440	305	525	1883	1200	600	1389

PERFORMANCE CURVE

1480 rpm

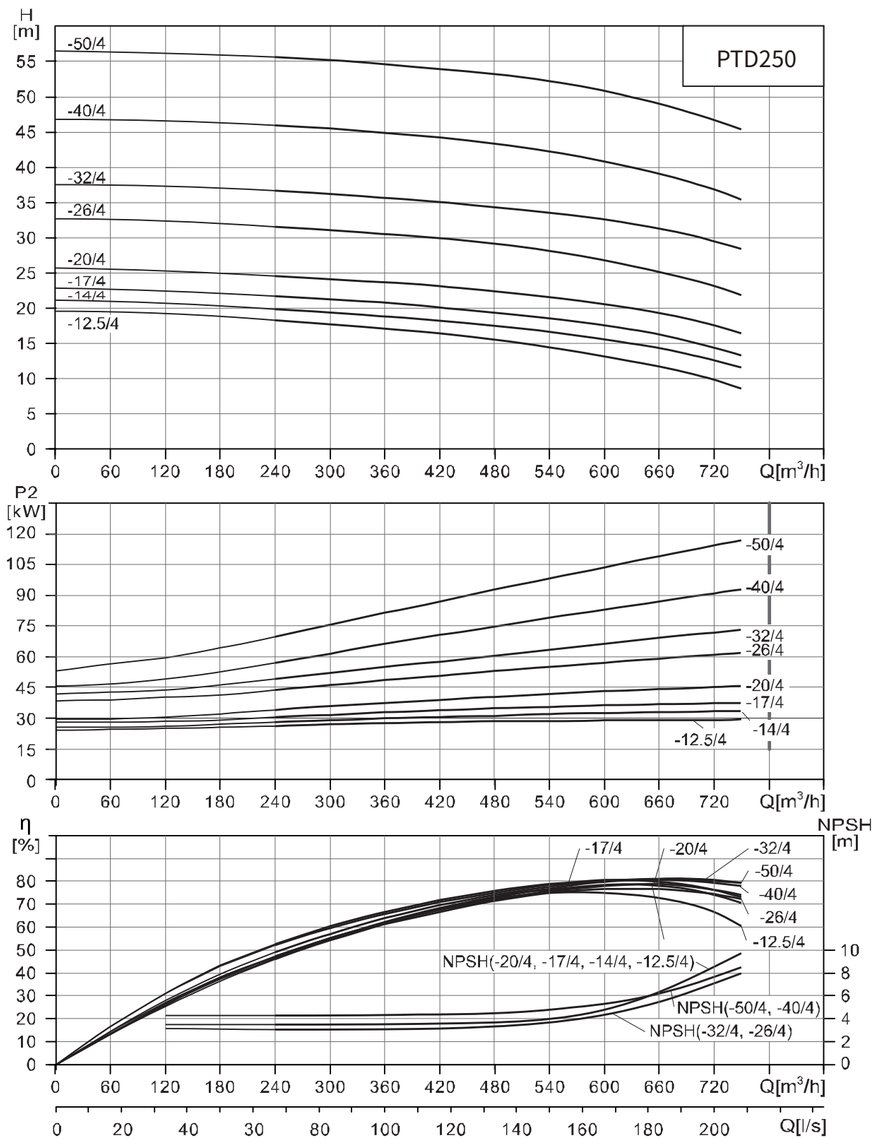

PTD
Single Stage Pipeline Circulating Pump

0.75~260KW/50Hz:3000/1500rpm

PTD250性能表

Model	Power kW	Q m³/h	240	300	360	420	480	540	600	630	660	720	750
PTD250-12.5/4	30	H(m)	18.4	17.9	17.2	16.4	15.5	14.5	13.2	12.5	11.8	9.9	8.7
PTD250-14/4	37	H(m)	20	19.5	18.9	18.2	17.5	16.6	15.6	14	13.4	12.6	11.6
PTD250-17/4	45	H(m)	21.8	21.63	20.8	20.1	19.4	18.6	17.6	17	16.3	14.4	13.4
PTD250-20/4	55	H(m)	247.5	24.1	23.7	23.1	22.4	21.5	20.5	20	19.3	17.6	16.5
PTD250-26/4	75	H(m)	31.7	31.1	30.6	29.9	29.1	28.2	26.8	26	25.2	23.1	21.9
PTD250-32/4	90	H(m)	36.7	36.3	35.7	35.1	34.3	33.5	32.6	32	31.3	29.5	28.4
PTD250-40/4	110	H(m)	46	45.5	44.9	44.2	43.4	42.3	40.8	40	39.1	36.8	35.5
PTD250-50-4	132	H(m)	55.6	55.2	54.6	53.9	53.2	52.3	50.9	50	48	46.7	45.4

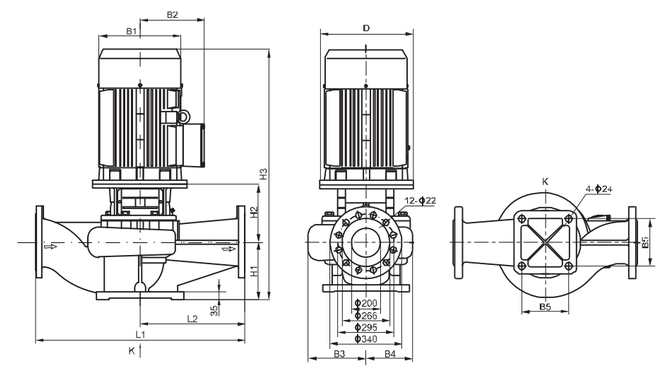

INSTALLATION SIZE DATA PARAMETERS

Model	D mm	B1 mm	B2 mm	B3 mm	B4 mm	B5 mm	H1 mm	H2 mm	H3 mm	L1 mm	L2 mm	kg
PTD250-12.5/4	400	397	314	316	243	390	300	465	1417	1100	550	588
PTD250-14/4	450	445	334	316	243	390	300	495	1469	1100	550	613
PTD250-17/4	450	445	334	316	243	390	300	495	1492	1100	550	649
PTD250-20/4	550	484	367	316	243	390	300	495	1568	1100	550	722
PTD250-26/4	550	547	407	329	264	440	300	507	1667	1100	550	999
PTD250-32/4	550	547	407	329	264	440	300	507	1687	1100	550	1033
PTD250-40/4	660	645	535	347	292	440	305	525	1803	1200	600	1389
PTD250-50-4	660	645	535	347	292	440	305	525	1990	1200	600	1473

PERFORMANCE CURVE

1480 rpm

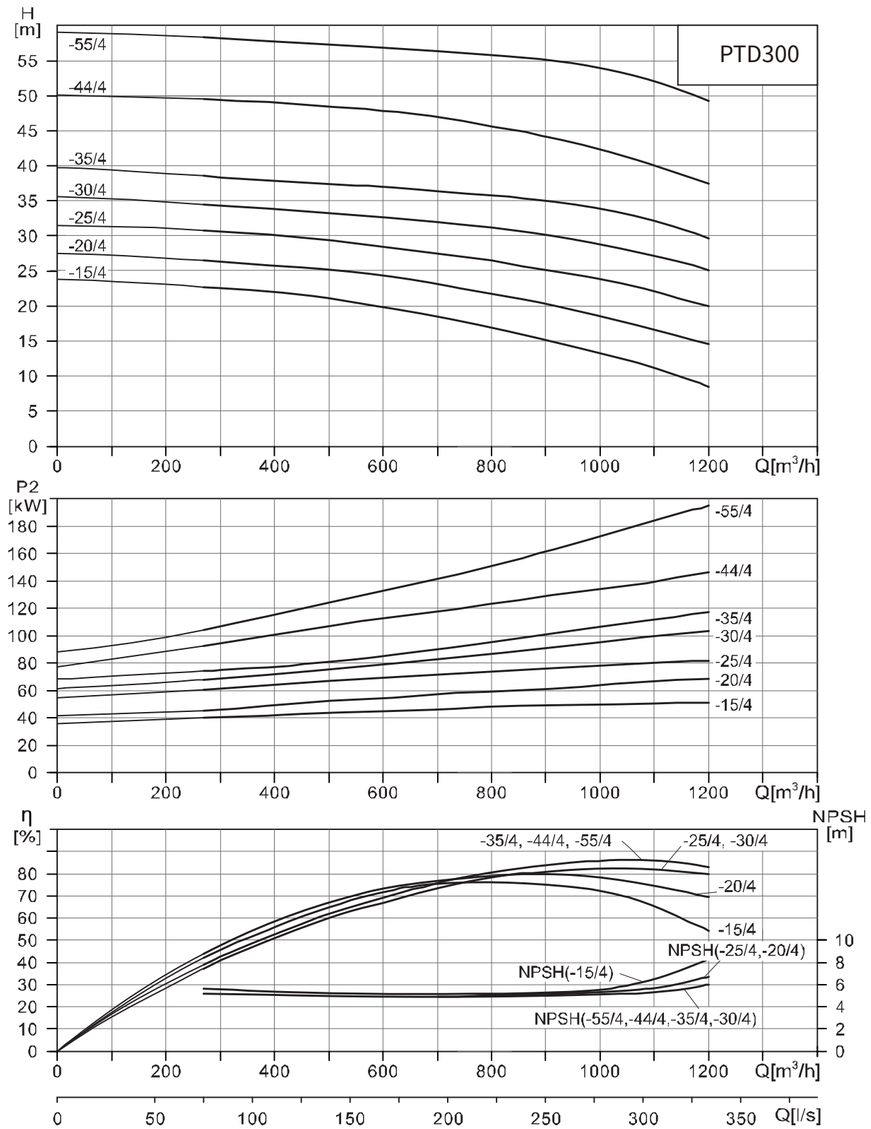

PTD

Single Stage Pipeline Circulating Pump

0.75~260KW/50Hz:3000/1500rpm

PTD300

Model	Power kW	Q m³/h	270	360	450	630	750	900	1080	1200
PTD300-15/4	55	H(m)	22.7	22.3	21.6	19.5	17.8	15	11.6	8.5
PTD300-20/4	75	H(m)	26.4	26	25.5	24.1	22.4	20	17.1	14.5
PTD300-25/4	90	H(m)	30.8	30.4	29.8	28.2	27.1	25	22.5	20
PTD300-30/4	110	H(m)	34.5	34	33.5	32.4	31.6	30	27.5	25
PTD300-35/4	132	H(m)	38.6	38.1	37.8	36.9	36	35	32.6	29.6
PTD300-44/4	160	H(m)	49.5	49.2	48.8	47.6	46.3	44	40.5	37.5
PTD300-55/4	200	H(m)	58.2	57.9	57.6	56.7	56.1	55	52.5	49.2

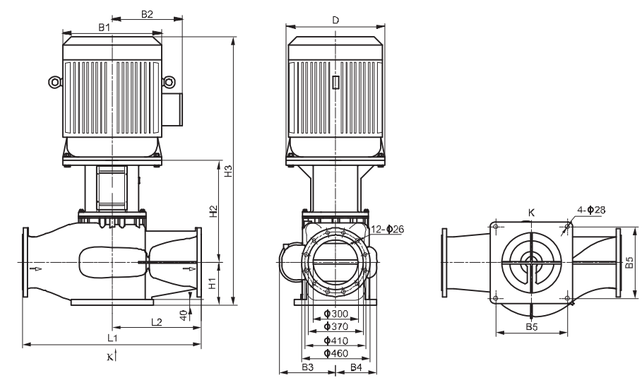

INSTALLATION SIZE DATA PARAMETERS

Model	D mm	B1 mm	B2 mm	B3 mm	B4 mm	B5 mm	H1 mm	H2 mm	H3 mm	L1 mm	L2 mm	kg
PTD300-15/4	550	484	367	345	250	440	285	647	1705	1200	600	907
PTD300-20/4	550	547	407	345	250	440	285	647	1792	1200	600	1075
PTD300-25/4	550	547	407	380	280	480	290	659	1829	1200	600	1230
PTD300-30/4	660	645	535	380	280	480	290	699	2042	1200	600	1570
PTD300-35/4	660	645	535	3B0	280	480	290	699	2149	1200	600	1650
PTD300-44/4	660	645	535	380	295	480	290	702	2150	1200	600	1679
PTD300-55/4	660	645	535	380	295	480	290	702	2150	1200	600	1731

Minimum inlet pressure -NPSH

If the pressure in the pump is lower than the vaporization pressure of the liquid, cavitation may occur. In order to avoid cavitation, ensure that there is a minimum voltage at the pump inlet side, and the maximum suction range H (m) according to the type:

H = pbxlO.2-NPSH-Hf-Hv-Hs

H- Large suction range (m)

pb- High, pressure (bar)

In a closed line, it can be considered the system pressure (bar) of a closed system.

NPSH- Net positive suction indenter (m)

The NPSH curve can be read out in the performance curve corresponding to the maximum flow rate.

Hf- Line loss at inlet (m)

It is the value corresponding to the maximum flow rate that the pipeline can produce.

Hv- Vaporization pressure of liquid (m)

The value depends on the temperature of the liquid and the vaporization pressure.

Hs and full allowance (m)

Minimum 0.5 m indenter.

Through calculation, if "H" is positive, it indicates that the pump can operate under the condition of the maximum suction range "H"; If "H" is negative, it means that the pump must have an indenter with a minimum pressure of the corresponding "H" meters at the inlet before it can operate normally.

Note: Generally not carried out; Above calculation. "H" should be calculated only if the pump is used in the following situations:

1, the liquid temperature is high
2. The liquid flow rate exceeds the rated value
3. Larger suction range or longer inlet pipeline
4. The system pressure is too small
5. Poor import conditions

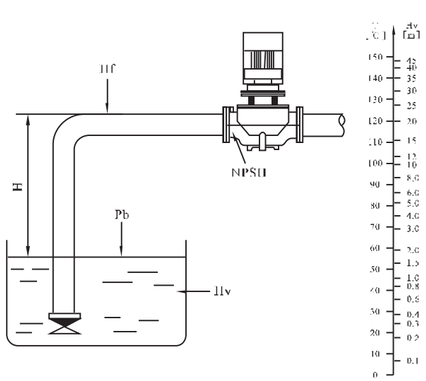

Maximum ambient temperature and altitude

When the machine is operated at an ambient temperature greater than 40℃ or an altitude greater than 1000m, the output power P2 of the motor will decrease to a certain extent due to the poor cooling effect due to the low air density. The motor power needs to be increased when the pump runs under the above conditions.

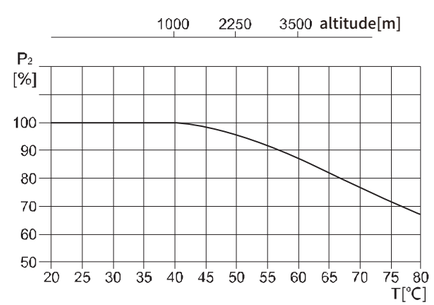

Product structure

The product adopts the separable structure of motor and pump, and the pump part is designed in the pull-out form. All the products come with standard motors and mechanical seals. The motor is a fully enclosed, air-cooled standard motor.The pump body is equivalent to a section of pipeline. When the pump is being repaired, the flange can be used to block the pump body, so as not to affect the normal operation of the system.The size of the connecting flange conforms to GB/T17241.6 (IS07005-2 grid standard), and the pressure grade is PN16.The import and export diameter of the product conforms to the relevant standard size.The pump head of the product is a device connecting the motor and pump body. The seal between it and the pump body uses an "O" ring.

The installation conditions

The product has different installation requirements. The specific installation requirements are as follows:1, the system pipeline has the ability to support the pump, supporting the pump ≤2.2kW motor can be directly suspended in the pipeline;2. For the pump with a motor ≤2.2kW, it can be installed horizontally or vertically on the working pipe; For the pump with > 2.2kW motor, it must be installed perpendicular to the horizontal direction in the working pipe. (figure 2 A)3. The installation of the pump should ensure that the tension of the system pipeline should not be transferred to the pump body when the pump is in use.4, in order to ensure the normal operation of the motor, the pump should be installed in the environment to ensure adequate cooling conditions, and the temperature of the cooling air can not exceed 40℃.5, if the pump is installed outdoors, must be equipped with a suitable cover to prevent electrical components from water or condensation.6, in order to facilitate the inspection and maintenance of the pump, in the pump, the bottom must leave enough space. Pump supporting motor < 5 5kW minimum leave 300mm; Minimum 1000mm for pump motor ≥5.5kW. (FIG. 2 - B)7, in order to prevent noise and vibration, to ensure the best operating effect, the pump in the installation of the vibration base to use. Generally, cement base is used, and the weight of the base should be ≥1.5x pump weight. (FIG. 2 - C)8. In order to meet the different needs of customers, TD32-TD150 products are divided into two kinds: with and without base plate. (See Annex 1 bottom plate for size of bottom plate)

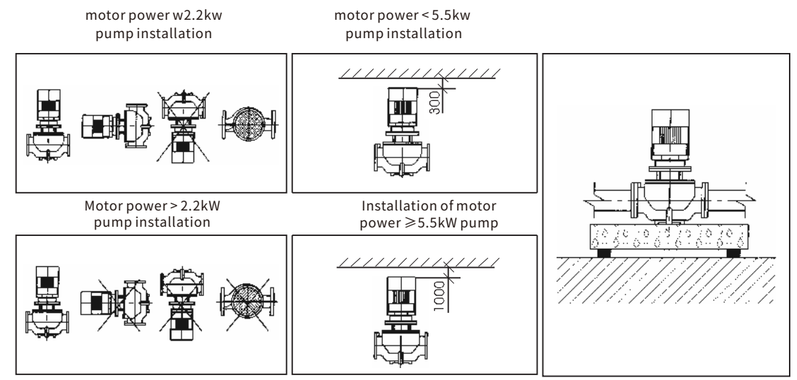

FIGURE 2-A FIGURE 2-B FIGURE 2-C

Overall data

Cross-section PTD32-PTD150 extended axis

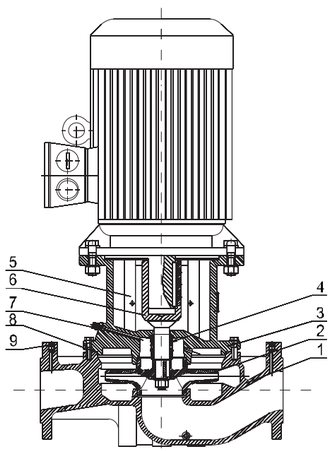

PTD32-PTD150 Material list

NO.	parts	material
1	Pump Body	Cast iron HT200
2	Impeller	Cast iron / Stainless steel HT200/ZG07Cr19Ni9
3	Pump Head	Cast iron HT200
4	Mechanical Seal	Graphite/silicon carbide
5	Protective Plate	Stainless steel 06Cr19Ni10
6	Pump Shaft	Stainless steel 20Cr13
7	Deflated components	Stainless steel 06Cr19Ni10
8	O-rings	Nitrile rubber NBR
9	Screw Plug	Stainless steel 06Cr19Ni10

Cross-section PTD200-PTD250 removable type

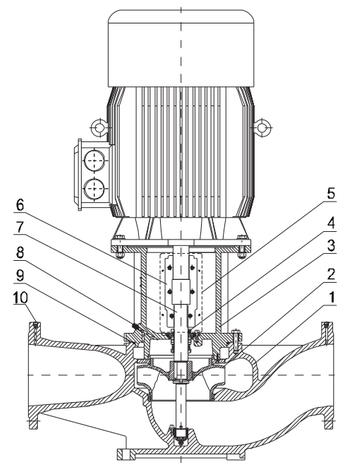

PTD200-PTD250 Material list

NO.	parts	material
1	Pump Body	Cast iron HT200
2	Impeller	Cast iron / Stainless steel HT200/ZG07Cr19Ni9
3	Pump Head	Cast iron HT200
4	Mechanical Seal	Graphite/silicon carbide
5	Protective Plate	Stainless steel 06Cr19Ni10
6	Coupling	Cast iron ZG270-500
7	Pump Shaft	Stainless steel 20Cr13
8	Deflated Components	Stainless steel 06Cr19Ni10
9	O-rings	Nitrile rubber NBR
10	Screw Plug	Stainless steel 06Cr19Ni10

Overall data

Cross-section PTD300 removable type

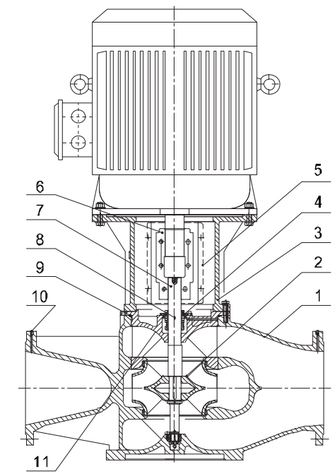

PTD300 Material list

NO.	parts	material
1	Pump Body	Ductile iron QT500-7
2	Impeller	Cast iron / Stainless steel HT200/ZG07Cr19Ni9
3	Pump Head	Cast iron HT200
4	Mechanical Seal	Graphite/silicon carbide
5	Protective Plate	Stainless steel 06Cr19Ni10
6	Coupling	Cast iron ZG270-500
7	Pump Shaft	Stainless steel 20Cr13
8	Deflated Components	Stainless steel 06Cr19Ni10
9	O-rings	Nitrile rubber NBR
10	Screw Plug	Stainless steel 06Cr19Ni10
11	Pump cover	Ductile iron QT500-7

Electric Machinery/accessory Base Plate

ELECTRIC MACHINERY

1. Lift: the lift marked on the pump nameplate is the value without deduction of pipeline friction resistance loss. When calculating the field lift, the vertical height from the water surface to the highest point of the outlet pipe (when the water level of the water tower is higher than the highest point of the pipe, it shall be calculated according to the highest water level of the water tower) at the lowest water level of the well, plus the head loss caused by the pipe, shall be measured, and then the appropriate pump shall be selected.
2. Pipe inner diameter: the hydraulic loss of the pipeline is related to the inner diameter, length and inner wall roughness of the pipeline. The thinner the pipe diameter, the longer the pipeline, and the rougher the inner wall, the greater the hydraulic loss of the pipeline. The inner diameter of the pump pipe is designed according to the flow, flow rate and other parameters. Increasing the pipe diameter will increase the cost, and reducing the pipe diameter will increase the head loss.

ACCESSORY BASE PLATE

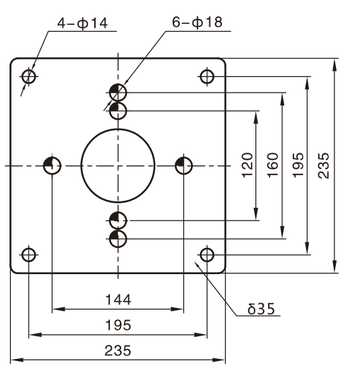

BASEBOARD A

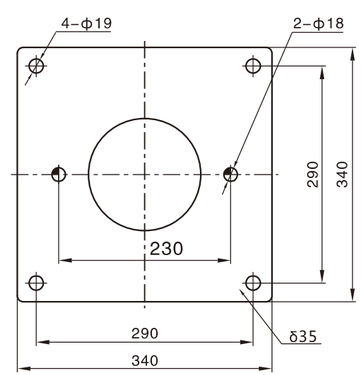

BASEBOARD B

Accessory Base Plate

DATA PARAMETER

Serial No	Product model	Base plate model	Serial No	Product model	Base plate model	Serial No	Product model	Base plate model
01	PTD32-14G/2	A	30	PTD50-80G/2	A	59	PTD100-25/2	A
02	PTD32-18G/2	A	31	PTD50-81G/2	A	60	PTD100-27/2	A
03	PTD32-21G/2	A	32	PTD65-15G/2	A	61	PTD100-32/2	B
04	PTD32-26G/2	A	33	PTD65-20G/2	A	62	PTD100-33/2	B
05	PTD32-33G/2	A	34	PTD65-22G/2	A	63	PTD100-40/2	B
06	PTD32-40G/2	A	35	PTD65-30G/2	A	64	PTD100-48/2	B
07	PTD32-50G/2	A	36	PTD65-34G/2	A	65	PTD100-52/2	B
08	PTD40-14G/2	A	37	PTD65-37G/2	A	66	PTD125-11/4	B
09	PTD40-16G/2	A	38	PTD65-41G/2	A	67	PTD125-14/4	B
10	PTD40-21G/2	A	39	PTD65-48G/2	A	68	PTD125-18/4	B
11	PTD40-20G/2	A	40	PTD65-51G/2	A	69	PTD125-20/4	B
12	PTD40-26G/2	A	41	PTD65-61G/2	A	70	PTD125-22/4	B
13	PTD40-30G/2	A	42	PTD65-68G/2	A	71	PTD125-28/4	B
14	PTD40-36G/2	A	43	PTD65-85G/2	A	72	PTD125-32/4	B
15	PTD40-48G/2	A	44	PTD80-13G/2	A	73	PTD125-40/4	B
16	PTD50-12G/2	A	45	PTD80-18G/2	A	74	PTD125-48/4	B
17	PTD50-15G/2	A	46	PTD80-23G/2	A	75	PTD125-50/4	B
18	PTD50-18G/2	A	47	PTD80-29G/2	A	76	PTD150-12.5/4	B
19	PTD50-24G/2	A	48	PTD80-32G/2	A	77	PTD150-15/4	B
20	PTD50-28G/2	A	49	PTD80-38G/2	A	78	PTD150-17/4	B
21	PTD50-32G/2	A	50	PTD80-41G/2	A	79	PTD150-18/4	B
22	PTD50-35G/2	A	51	PTD80-47G/2	A	80	PTD150-20/4	B
23	PTD50-39G/2	A	52	PTD80-48G/2	A	81	PTD150-21/4	B
24	PTD50-40G/2	A	53	PTD80-54G/2	A	82	PTD150-25/4	B
25	PTD50-49G/2	A	54	PTD80-67G/2	A	83	PTD150-33/4	B
26	PTD50-50G/2	A	55	PTD100-9/2	A	84	PTD150-40/4	B
27	PTD50-59G/2	A	56	PTD100-15/2	A	85	PTD150-50/4	B
28	PTD50-60G/2	A	57	PTD100-17/2	A			
29	PTD50-70G/2	A	58	PTD100-22/2	A			

Note: The base plate is optional, and the customer who needs it shall specify it when ordering!
There is no need to purchase connecting base plates with diameters above 200.