GRUNDFOS **DATA BOOKLET**

MTS

Screw pumps
50/60 Hz

Contents

Introduction

MTS 3
Performance range - MTS, 50 Hz 4
Performance range - MTS, 60 Hz 5
Performance range - MTS, 60 Hz 5

General description

Main applications 6
Application 6
Product range 6
Type key 7
Construction 7
Motor 7
Motor protection 7
Terminal box positions 7
Ambient temperature 7
Overload protection 8
Sound pressure level 8
Shaft sealing/connections 8

Construction

MTS 20 and 40 9
MTS 80, 140, 210, 280 and 440 10
Material specification 11
Tank top design 11
Installation 11

Technical data

NPSH curves for MTS pumps 40
Spindle 46 40
Small spindle 46 41
Spindle 56 41

Pumped liquids

List of pumped liquids 42
Filtration 42

Motor data

Mains-operated motors for MTS, 50 Hz 43
Mains-operated motors for MTS, 60 Hz 44

Accessories

Counter flanges for discharge port 45
Counter flanges for suction port (only D8.6) 46
Variants 47

Introduction

MTS

This data booklet deals with MTS pumps. see fig. 1

MTS pumps are screw pumps designed for pumping of cooling lubricants and cutting oils for machine tool applications.

The pumps are designed to be mounted on top of tanks with the pump immersed in the pumped liquid.

Grundfos MTS pumps come with various pump sizes and screw pitches to provide the flow, pressure and length required.

The pumps consist of two main components: The motor and the pump unit. The motor is a Grundfos standard MG motor designed to EN standards.

The pump unit consists of optimised hydraulics, various types of connections, a motor stool and various other parts.

GrA6057

Fig. 1 MTS pump

Performance curves

Performance range - MTS, 50 Hz

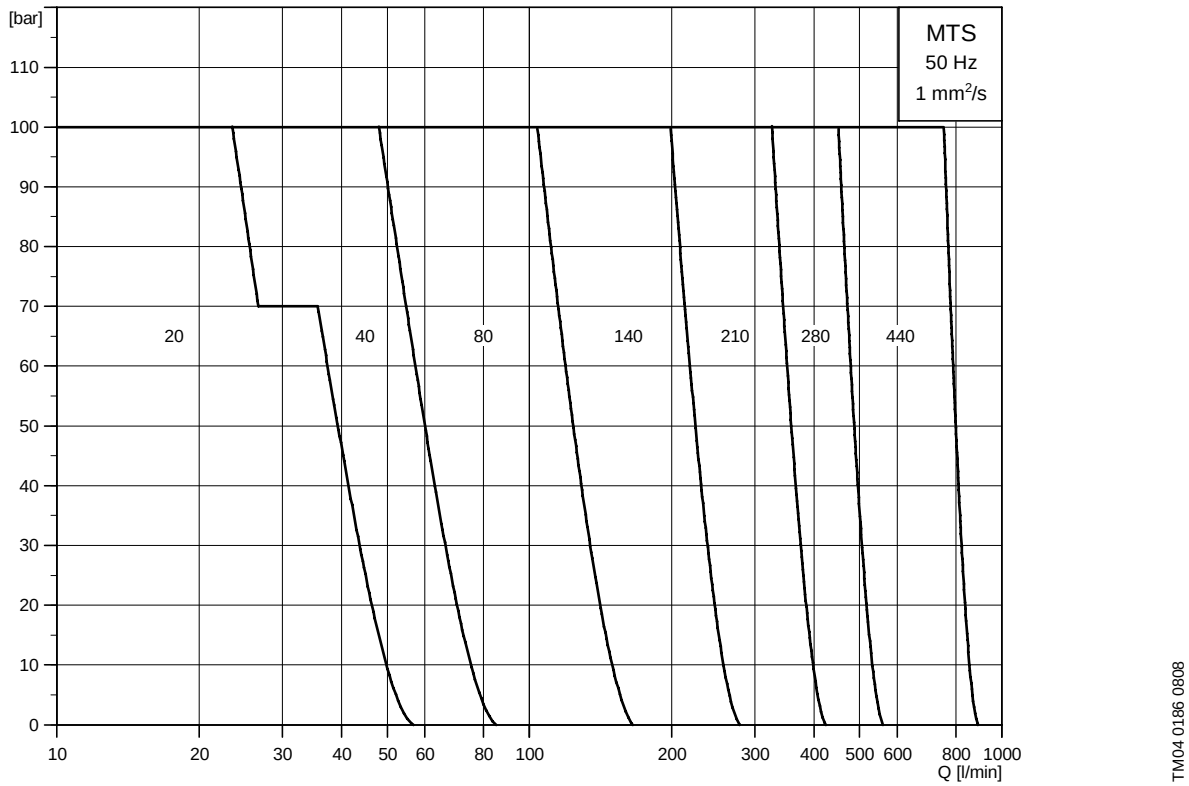

Fig. 2 Performance range - MTS, 50 Hz

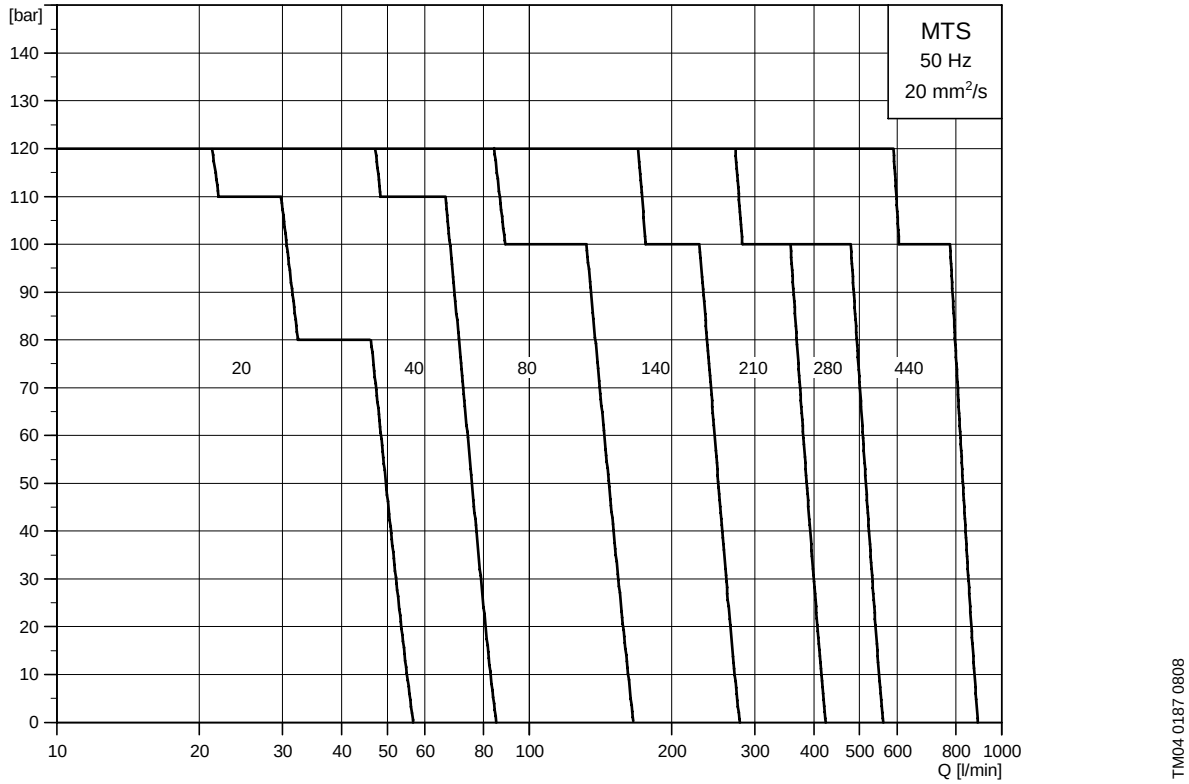

Performance curves

Performance range - MTS, 60 Hz

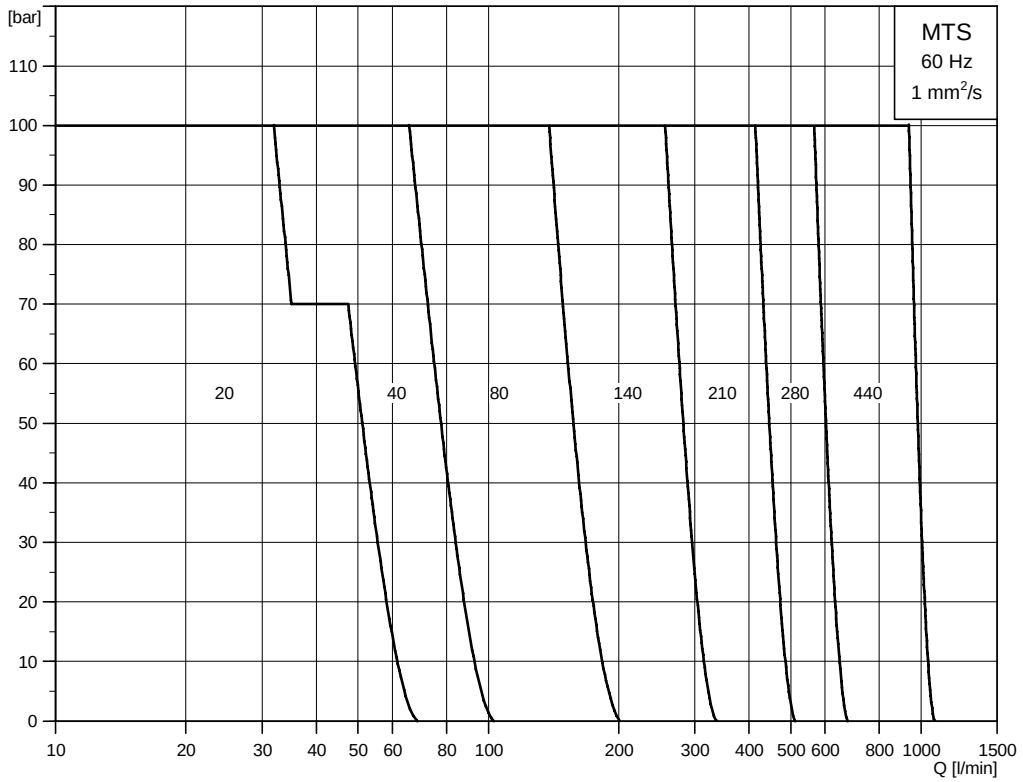

TM04 0188 0808

Performance range - MTS, 60 Hz

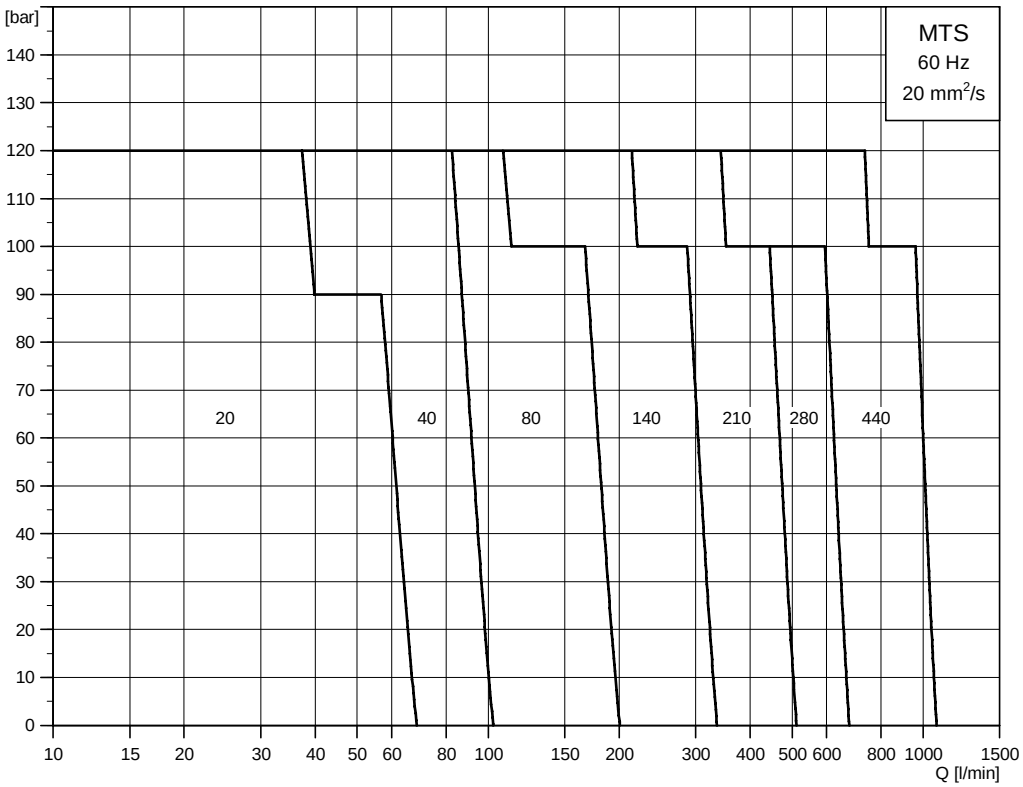

TM04 0189 0808

General description

Main applications

MTS pumps are an important part of modern metal machining centres, transfer lines and grinding and deep-hole drilling machines.

Application

Transfer of well, conditionally or poorly lubricating abrasive liquids in metal working or process engineering, such as cutting, grinding and deep-hole drilling oils, oil-in-water emulsions and cooling lubricant solutions. The pumped liquid must not attack the materials.

Permissible cooling lubricants:

- Solutions (inorganic substances in water; organic and synthetic substances in water)
- Emulsions (oil-in-water, oil content 2 % to 20 %)
- Cutting and grinding oils (without additives; with polar physically acting additives; with mildly acting, lubricating film forming additives; with polar and mildly acting additives; with active, chemical additives; with polar and active additives)

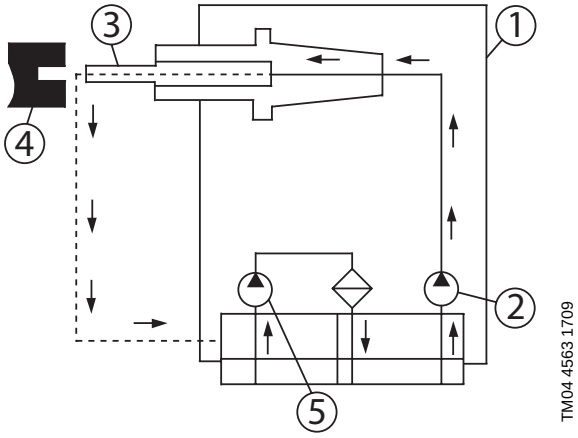

Fig. 1 Princip skitse

1	Machining center
2	MTS high presure pump
3	Drilling tool
4	Work piece
5	Filter pump

Product range

Range	MTS 20	MTS 40	MTS 80	MTS 140	MTS 210	MTS 280	MTS 440
50 Hz							
Flow range [l/min]	0-56	0-85	0-166	0-279	0-424	0-561	0-891
Motor power P2 [kW]	0.3-7.1	0.4-16	0.6-29.0	1.0-48.5	1.7-74.3	2.8-99.4	4.4-158
60 Hz							
Flow range [l/min]	0-68	0-103	0-201	0-336	0-512	0-677	0-1076
Motor power P2 [kW]	0.4-10.7	0.5-21.7	0.8-35.2	1.3-58.8	2.3-90.1	3.8-121	5.8-191
General data							
Max. temperature [°C]	80	80	80	80	80	80	80
Max. differential pressure (emulsion) [bar]	100	100	100	100	100	100	100
Max. differential pressure (oil) [bar]	120	120	120	120	120	100	120
Max. inlet/suction pressure (DQ version) [bar]	1	1	1	1	-	-	-
Max. inlet/suction pressure (D8.6 version) [bar]	10	10	10	10	10	10	10
Pipe connection							
Suction (DQ version)	G 1¼	G 1¼	G 2	G 2	-	-	-
Suction (D8.6 version)	SAE 1½"	SAE 1½"	SAE 2"	SAE 2"	SAE 2½"	SAE 3"	SAE 4"
Discharge pipe thread	G 3/4	G 3/4	G 1¼	G 1¼	-	-	-
Discharge flange	SAE 1"	SAE 1"	SAE 1½"	SAE 1½"	SAE 2"	SAE 2½"	SAE 3"
Installation length [mm]	248	286	335	386	397	467	546
Shaft seal							
DQ (seal ring)	●	●	●	●	-	-	-
D8.6 (mechanical seal)	●	●	●	●	●	●	●

General description

Type key

Example	MTS	(E)	80-40	R	46	D	8.6

- Type range
- With integrated frequency converter
- Frame size-max. pressure (bar)
- Spindle sense of gradient (R = right)
- Spindle pitch angle in degrees
- Construction feature
  D = External ball bearing, shaft seal unheated, uncooled
- Shaft seal/connections
  Q = Shaft seal ring/axial inlet, pipe thread as standard
  8.6 = Mechanical shaft seal/radial inlet, SAE as standard

Construction

Three-screw, self-priming, flange-mounted pump (DIN ISO 3019-2) with special surface-hardened drive and idler screws. The idler screws are hydraulically driven, and the axial thrust is completely neutralised hydrostatically. The drive screw is fixed in position with external, permanently lubricated groove ball bearing. The large overall length with its many chambers results in little surface pressure, low pressure differences and thus reduced wear. The rotor housing has been optimised to ensure maximum resistance to wear. The material used is specially hardened grey cast iron (EN-GJL) that is part of a special safety concept. The housing surface in contact with the screws has a ceramic-like hardness. Additionally, unlike with other materials (such as SiC), wear, shocks, vibration or aeration cannot lead to sudden failure of the pump unit. Construction and materials result in little wear, good controllability and high efficiency.

Motor

MTS pumps are fitted with a totally enclosed, fan-cooled, 2-pole Grundfos standard MG or a Siemens motor with principal dimensions according to EN and IEC standards.
Electrical tolerances according to EN 60034.

Electrical data

Mounting designation	B5/V1	
Insulation class	F	
Efficiency class	3-5.5 kW EFF2 7.5-200 kW EFF1	
Enclosure class	IP 55	
Supply voltage, 50 Hz (tolerance ± 10 %)	P_2: 3-5.5 kW: P_2: 7.5-200 kW:	3 x 380-415 V 3 x 380-415/660-690 V
Supply voltage, 60 Hz (tolerance ± 10 %)	P_2: 3-5.5 kW: P_2: 7.5-200 kW:	3 x 380-480 V 3 x 380-480/660-690 V
On request		
Supply voltage, 50 Hz	3 x 200-220/346-380 V	
Supply voltage, 60 Hz	3 x 200-230/346-400 V 3 x 208-230/460-480 V	

On request, Grundfos MG motors are available with cURus approvals carried out by the Underwriters Laboratories Inc. according to the UL 1004 standard for electrical motors.

Motor protection

MG motors

Three-phase motors **must** be connected to a motor-protective circuit breaker in accordance with local regulations.

Three-phase Grundfos and Siemens motors from 3 kW and upwards have a built-in thermistor (PTC) according to DIN 44082 (IEC 34-11: TP 211).

Terminal box positions

As standard, MTS pumps have their terminal box mounted in position 12 o'clock of the pump; however, other positions are possible.

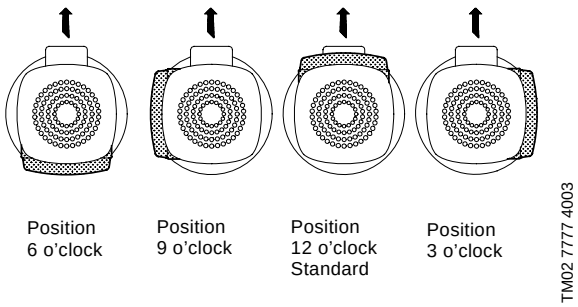

Fig. 2 Terminal box positions

Ambient temperature

3.0-5.5 kW motors (EFF2, MG):	Max. +40 °C
7.5-22 kW motors (EFF1, MG	Max. +60 °C
30-200 kW motors (EFF1)	Max. +55 °C

If the ambient temperature exceeds above maximum values or if the motor is located 1000 metres above sea level, the motor output (P2) must be reduced due to the low density and consequently low cooling effect of the air. In such cases, it may be necessary to use a motor with a higher output.

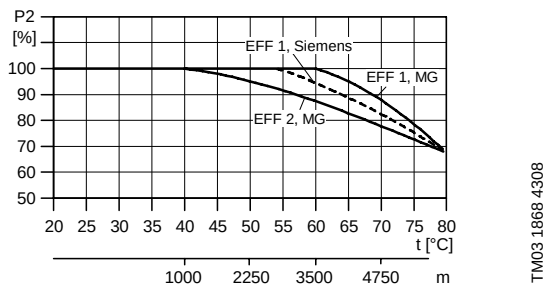

Fig. 3 Relationship between motor output (P2) and ambient temperature/altitude

General description

Overload protection

The pump has no pressure-relief valve. Thus the overload protection must be provided in the control system or with a pressure-relief valve.

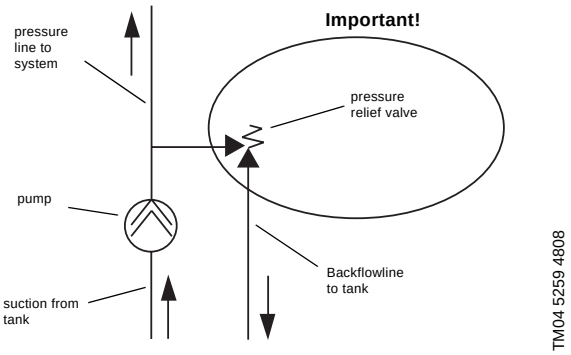

Fig. 4 Overload protection

Sound pressure level

MTS construction design allows gentle, even, virtually pulsation-free and low-noise pumping. The noise emission lies between 56 and 74 dBA and depends on speed, pump size and installation. MTS pumps operate significantly quieter than rotary lobe and centrifugal pumps with comparable performance.

Measuring conditions:

- Distance to the pump: 1 m
- Operation: Cavitation-free
- Motor: IEC standard motor
- Tolerance: ± 3 dB.

Size	Sound pressure level [dB]	
	2900 [rpm]	3500 [rpm]
20	56	58
40	59	61
80	61	63
140	64	66
210	67	69
280	69	71
440	72	74

The data are reference values.

The actual airborne sound level depends especially on the installation conditions.

Shaft sealing/connections

Design DQ

Shaft sealing with shaft seal ring. Inlet pressure up to 1 bar. Axial inlet with pipe thread connection (DIN EN ISO 228-1). Radial high-pressure discharge flange according to SAE J518C. MTS 20 to 140 additionally with pipe thread connection (DIN EN ISO 228-1).

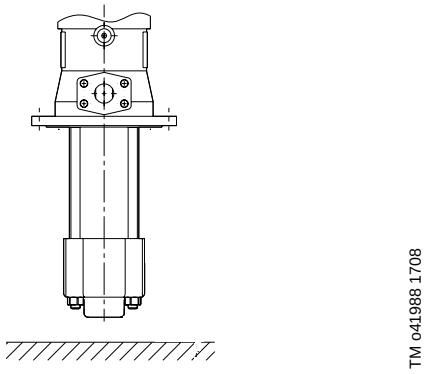

Fig. 5 Design DQ

Design D8.6

Shaft sealing with maintenance-free highly wear-resistant mechanical shaft seal according to EN 12756. Radial high-pressure inlet and discharge flanges according to SAEJ518C. As standard, the inlet of the other version can be chosen as an option.

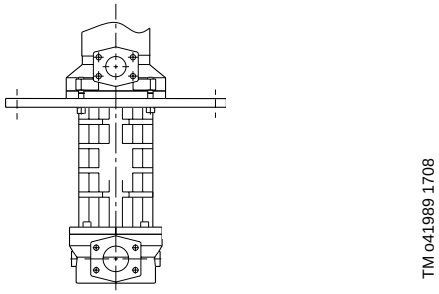

Fig. 6 Design D8.6

MTS 20 and 40

D 8.6
SAE flange on suction side

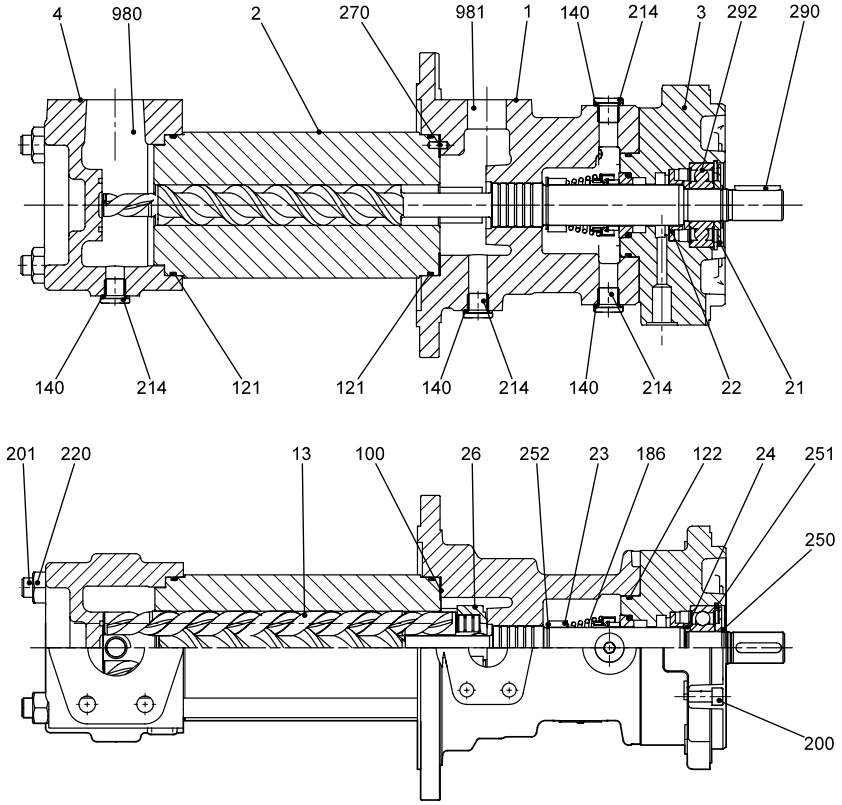

DQ
with axial pipe thread connection on suction side

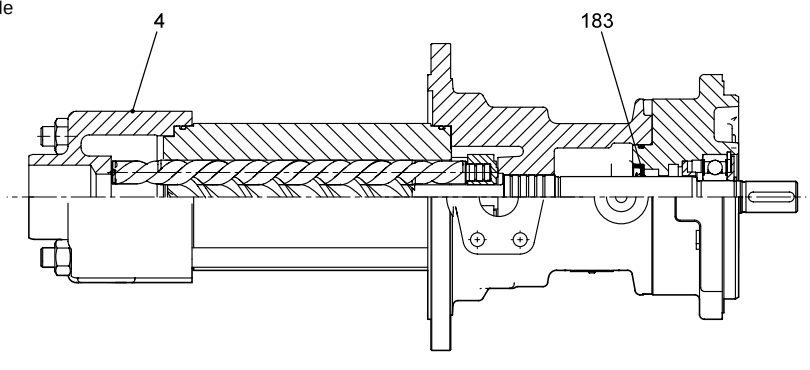

Fig. 7 Sectional drawings of MTS 20 and 40

Designation	Pos.	Designation	Pos.	Designation	Part No.
Discharge casing	1	Gasket	100	Circlip	251
Rotor housing	2	O-ring	121	Circlip	252
Pump cover	3	O-ring	122	Clamping sleeve	270
Suction casing	4	Seal ring	140	Rivet	280
Drive screw	12	Shaft seal ring	183	Key	290
Idler screw	13	Mechanical shaft seal	186	Groove ball bearing	292
Labyrinth ring	21	Socket head cap screw	200	Nameplate	970
Labyrinth ring	22	Stud bolt	201	Plastic cover	980
Spacer ring	23	Screw plug	214	Plastic cover	981
Spacer ring	24	Hexagon nut	220		
Balance bush	26	Circlip	250		

MTS 80, 140, 210, 280 and 440

D 8.6
SAE flange on suction side

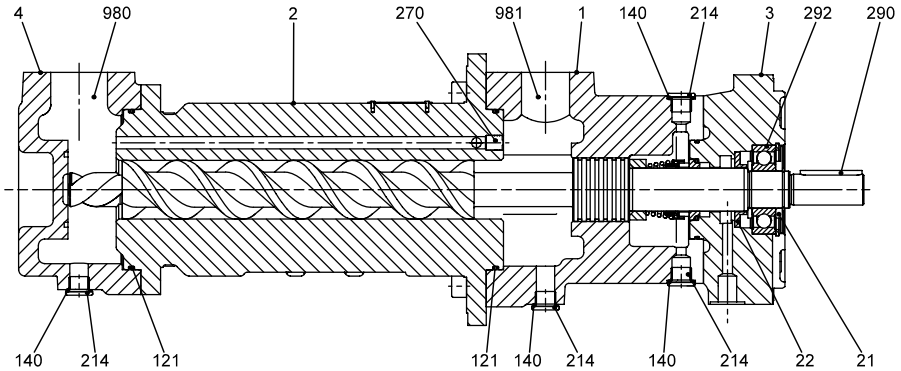

Sizes 80, 140, 210,280,440

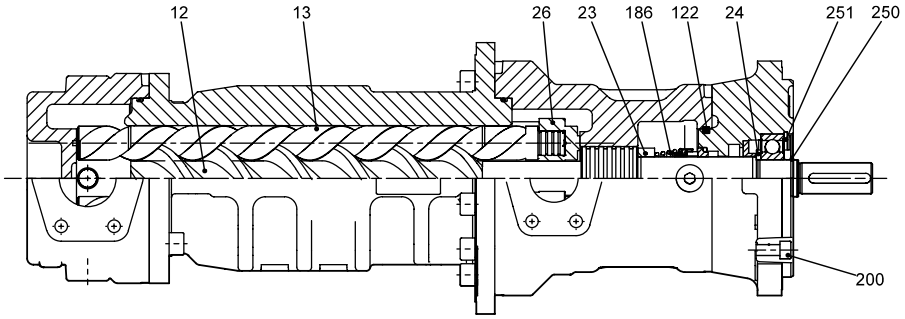

DQ
with axial pipe thread connection on suction side, only sizes 80, 140 suction side

Sizes 80, 140

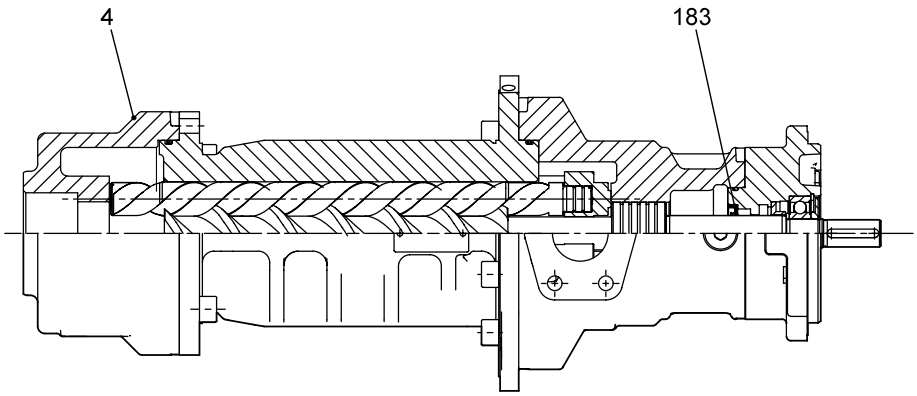

TM04 2626 3507

Fig. 8 Sectional drawings MTS 80, 140, 210, 280 and 440

Designation	Pos.	Designation	Pos.	Designation	Pos.
Discharge casing	1	O-ring	121	Circlip	250
Rotor housing	2	O-ring	122	Circlip	251
Pump cover	3	O-ring	129	Inside ring	270
Suction casing	4	Seal ring	140	Rivet	280
Drive screw	12	Joint plug	160	Key	290
Idler screw	13	Joint plug	161	Groove ball bearing	292
Labyrinth ring	21	Shaft seal ring	183	Nameplate	970
Labyrinth ring	22	Mechanical seal	186	Plastic cover	980
Spacer ring	23	Socket head cap screw	200	Plastic cover	981
Ring	24	Socket head cap screw	201		
Balance bush	26	Screw plug	214		

Construction

Material specification

Designation	Pos.	Materials W 110221		
Rotor housing (basic material)	2	EN-GJL-250	GG25	Cast iron
Rotor housing (active surfaces in the spindle bores)		Specially hardened	Basic hardness	62 HRC
			Surface hardness	1200 HV
Suction casing	4	EN-GJL-250	GG25	Cast iron
Discharge casing	1	EN-GJL-250	GG25	Cast iron
Screw set (basic material)	13	1.7139	16MnCrS5	Special steel, nitrided 62 HRC
Screw set (surface)	13	specially treated	(PVD)	1200 HV
Pump cover	3	EN-GJL-250	GG25	Cast iron
Mechanical shaft seal	186	Q1Q1VGG	SiC/SiC, FPM, 1.4571	Silicon carbide, fluoroelastomer, stainless steel
Shaft seal ring	183	FPM		Fluoroelastomer
Static gaskets	140	FPM		Fluoroelastomer

Tank top design

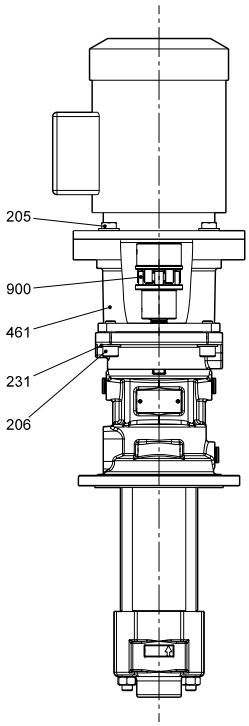

TM02 8537 0404

Fig. 9

Designation	Pos.
Hexagon head bolt	205
Hexagon head bolt	206
Lock washer	231
Pump bracket	461
Coupling	900

Some sizes have an intermediate ring (pos. 462, not shown) between pump bracket and motor.

Installation

In order to protect the pump at start-up and to ensure correct performance, observe the requirements in the table below.

Pump type	A [mm]	B [mm]
MTS 20	max 147	min 25
MTS 40	max 190	min 25
MTS 80	max 224	min 25
MTS 140	max 265	min 25
MTS 210	max 286	-
MTS 280	max 335	-
MTS 440	max 387	-

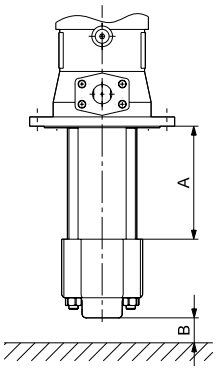

TM04 1989 3808

Fig. 10 Design DQ

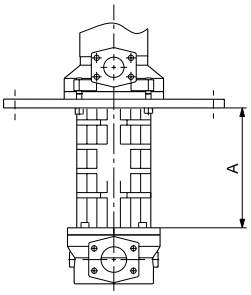

TM04 1988 3808

Fig. 11 Design D8.6

Performance range

Performance data at 1 mm²/s (emulsion)

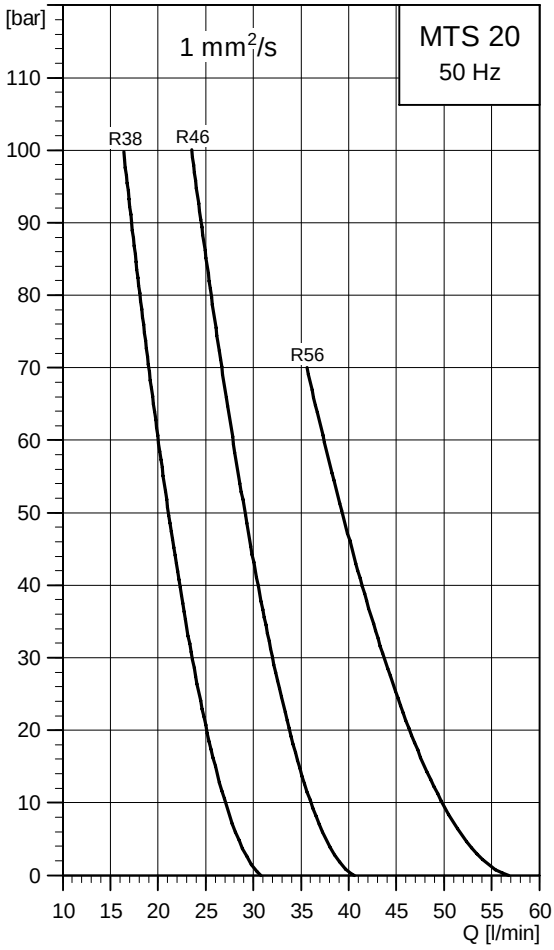

TM04 0030 4807

Performance data at 20 mm²/s (cutting oil with EP additives)

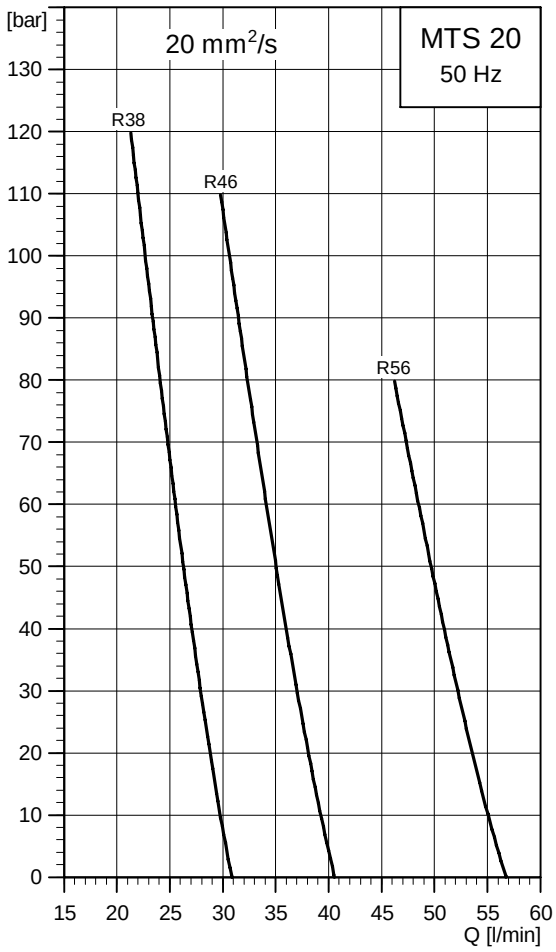

TM04 0031 4807

Performance table

Pressure	1 mm²/s (emulsion)						20 mm²/s (cutting oil with EP additives)					
	R38		R46		R56		R38		R46		R56	
	Q	P	Q	P	Q	P	Q	P	Q	P	Q	P
bar	l/min	kW	l/min	kW	l/min	kW	l/min	kW	l/min	kW	l/min	kW
0	30.9	0.3	40.6	0.3	56.8	0.3	30.9	0.3	40.6	0.3	56.8	0.3
10	27	0.8	36	1	49.8	1.3	29.7	0.8	39.2	1	55	1.3
20	25.1	1.3	33.8	1.7	46.4	2.2	28.8	1.3	38.1	1.7	53.6	2.2
30	23.6	1.9	32	2.3	43.7	3.2	27.9	1.9	37	2.3	52.2	3.2
40	22.3	2.4	30.5	3	41.4	4.1	27.1	2.4	36	3	50.9	4.1
50	21.1	2.9	29.1	3.7	39.3	5	26.3	2.9	35.1	3.7	49.7	5
60	20	3.4	27.8	4.4	37.4	6	25.5	3.4	34.1	4.4	48.5	6
70	19	3.9	26.7	5	35.6	6.9	24.8	3.9	33.2	5	47.3	6.9
80	18.1	4.4	25.6	5.7	-	-	24.1	4.4	32.3	5.7	46.2	7.9
90	17.2	4.9	24.5	6.4	-	-	23.4	4.9	31.5	6.4	-	-
100	16.4	5.5	23.5	7.1	-	-	22.6	5.5	30.6	7.1	-	-
110	-	-	-	-	-	-	22	6	29.8	7.8	-	-
120	-	-	-	-	-	-	21.3	6.5	-	-	-	-

Dimensional sketches

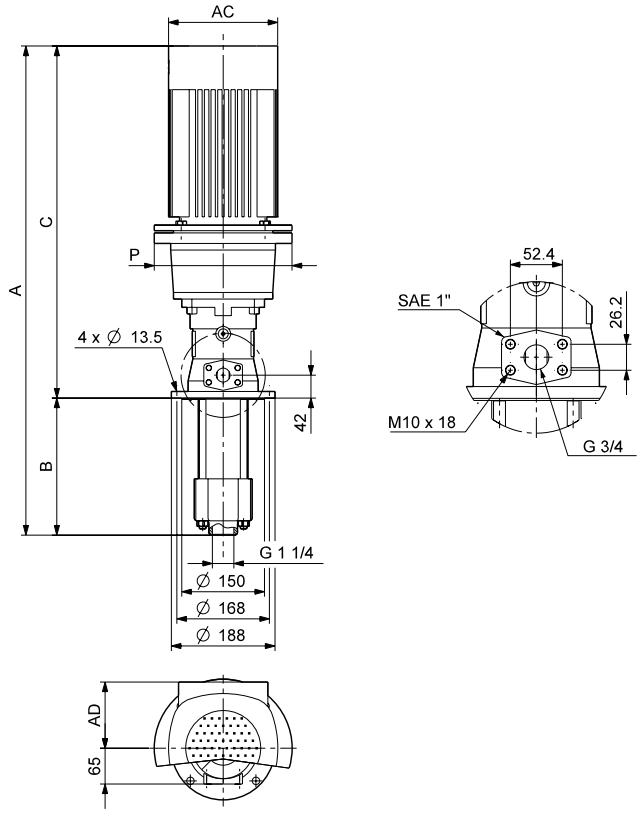

TM03 9163 3507

Dimensions and weights

Pump type	P2 [kW]	Dimensions [mm]						Net weight [kg]
		A	B	C	AC	AD	P	
MTS 20-40 R38 DQ	3	881	248	633	198	120	250	49
MTS 20-50 R38 DQ	4	918	248	670	220	134	250	61
MTS 20-80 R38 DQ	5.5	961	248	713	220	134	300	70
MTS 20-100 R38 DQ	7.5	961	248	713	220	134	300	71
MTS 20-30 R46 DQ	3	881	248	633	198	120	250	49
MTS 20-40 R46 DQ	4	918	248	670	220	134	250	61
MTS 20-60 R46 DQ	5.5	961	248	713	220	134	300	70
MTS 20-80 R46 DQ	7.5	961	248	713	220	134	300	71
MTS 20-100 R46 DQ	11	1078	248	830	260	172	350	99
MTS 20-30 R56 DQ	4	918	248	670	220	134	250	61
MTS 20-40 R56 DQ	5.5	961	248	713	220	134	300	70
MTS 20-70 R56 DQ	7.5	961	248	713	220	134	300	71

Performance range

Performance data at 1 mm²/s (emulsion)

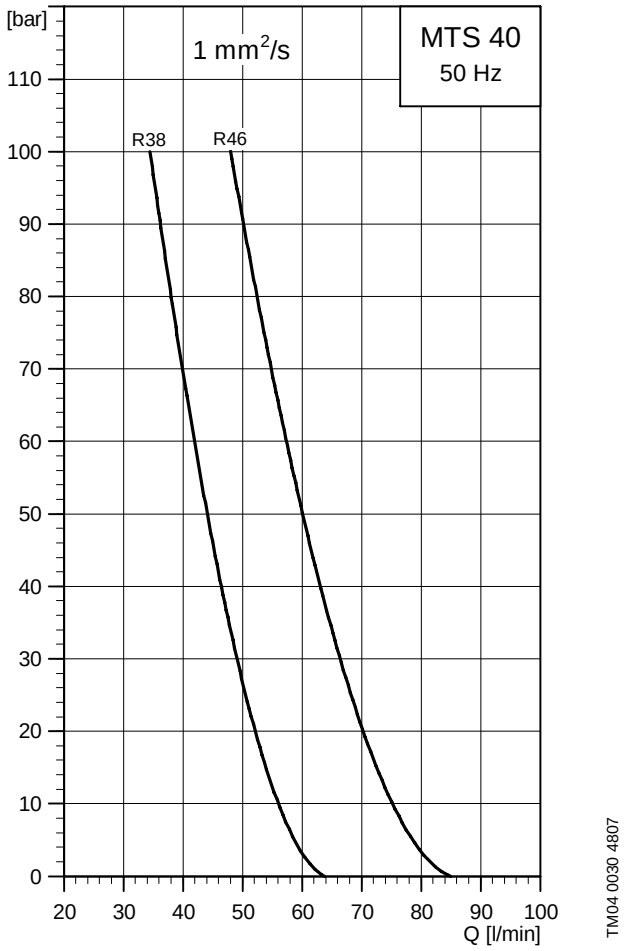

Performance data at 20 mm²/s (cutting oil with EP additives)

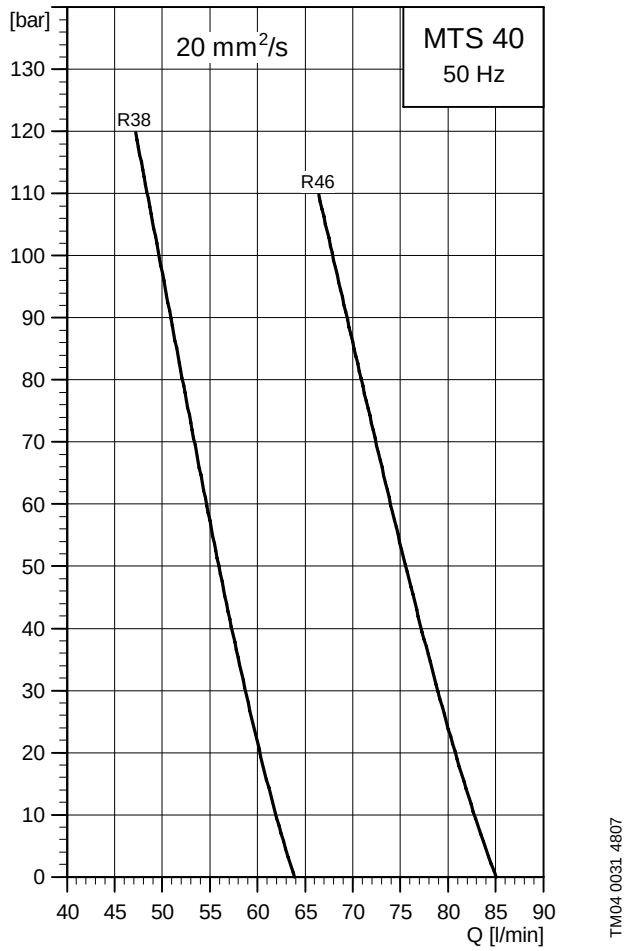

Performance table

Pressure	1 mm²/s (emulsion)				20 mm²/s (cutting oil with EP additives)			
	R38		R46		R38		R46	
	Q	P	Q	P	Q	P	Q	P
bar	l/min	kW	l/min	kW	l/min	kW	l/min	kW
0	63.9	0.4	85.1	0.4	63.9	0.8	85.1	0.8
10	56	1.5	75.1	1.8	61.9	1.9	82.7	2.3
20	52.1	2.5	70.3	3.2	60.2	3	80.7	3.7
30	49.1	3.6	66.4	4.7	58.7	4	78.9	5.1
40	46.5	4.7	63.1	6.1	57.3	5.1	77.2	6.5
50	44.1	5.7	60.1	7.5	56	6.2	75.6	7.9
60	41.9	6.8	57.4	8.9	54.6	7.2	74	9.4
70	39.9	7.8	54.8	10.3	53.4	8.3	72.4	10.8
80	38	8.9	52.4	11.7	52.1	9.4	70.9	12.2
90	36.2	10	50.2	13.2	50.9	10.4	69.3	13.6
100	34.5	11	48	14.6	49.6	11.5	67.9	15
110	-	-	-	-	48.4	12.6	66.4	16.3
120	-	-	-	-	47.2	13.6	-	-

Dimensional sketches

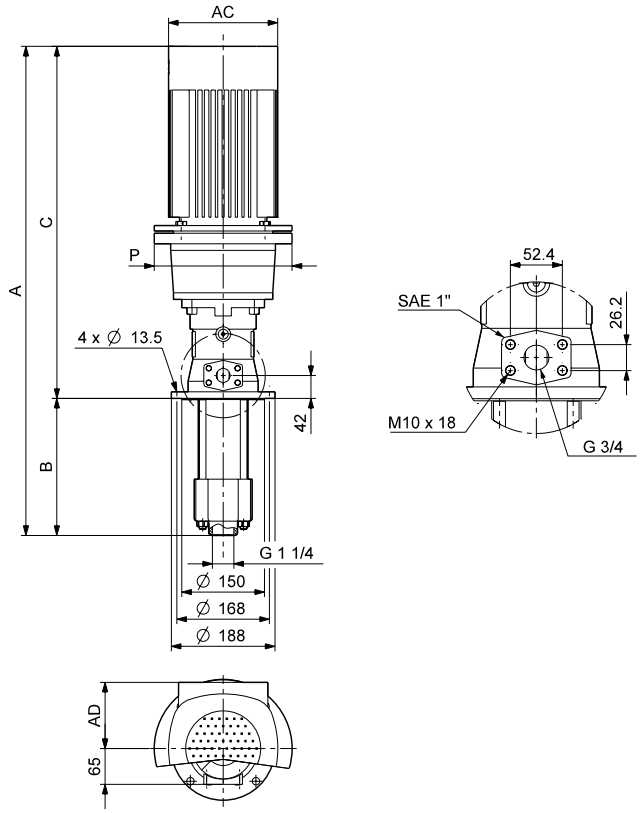

TM03 9163 3507

Dimensions and weights

Pump type	P2 [kW]	Dimensions [mm]						Net weight [kg]
		A	B	C	AC	AD	P	
MTS 40-20 R38 DQ	3	931	286	645	198	120	250	54
MTS 40-30 R38 DQ	5.5	1011	286	725	220	134	300	75
MTS 40-50 R38 DQ	7.5	1011	286	725	220	134	300	76
MTS 40-80 R38 DQ	11	1128	286	842	260	172	350	104
MTS 40-100 R38 DQ	15	1142	286	856	320	197	350	117
MTS 40-20 R46 DQ	4	968	286	682	220	134	250	66
MTS 40-40 R46 DQ	7.5	1011	286	725	220	134	300	76
MTS 40-60 R46 DQ	11	1128	286	842	260	172	350	104
MTS 40-90 R46 DQ	15	1142	286	856	320	197	350	117
MTS 40-100 R46 DQ	18.5	1182	286	896	320	197	350	137

Performance range

Performance data at 1 mm²/s (emulsion)

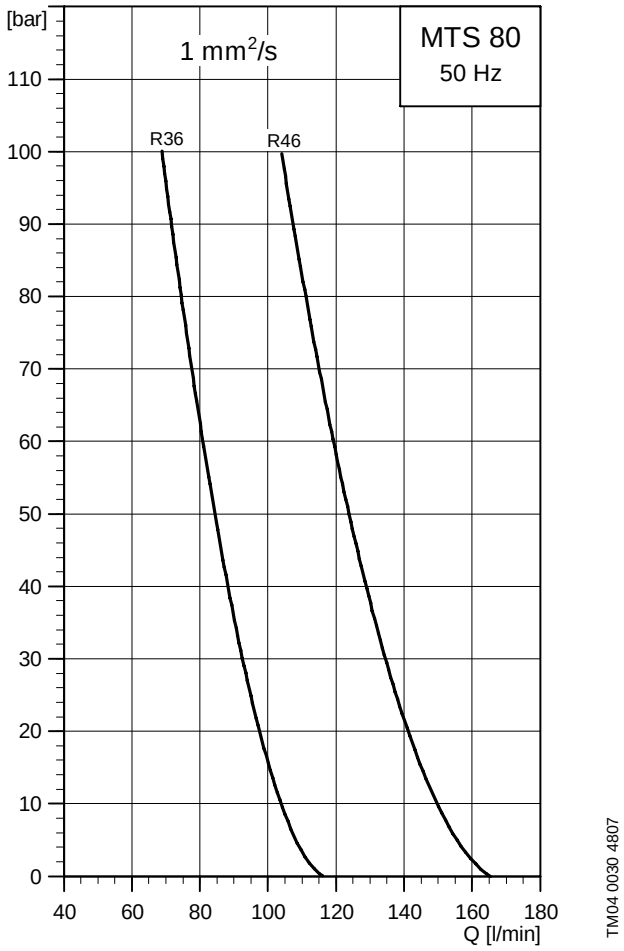

Performance data at 20 mm²/s (cutting oil with EP additives)

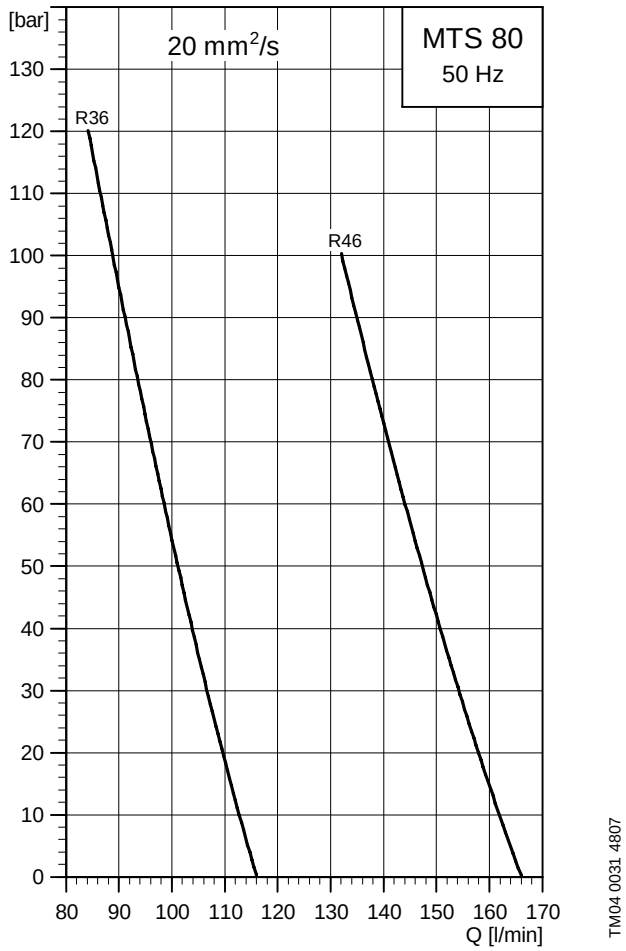

Performance table

Pressure	1 mm²/s (emulsion)				20 mm²/s (cutting oil with EP additives)			
	R36		R46		R36		R46	
	Q	P	Q	P	Q	P	Q	P
bar	l/min	kW	l/min	kW	l/min	kW	l/min	kW
0	116	0.6	166	0.6	116	1.3	166	1.3
10	104	2.6	149	3.4	113	3.3	162	4.1
20	97.4	4.5	141	6.2	109	5.2	158	6.9
30	92.5	6.4	135	8.9	107	7.1	154	9.6
40	88.2	8.4	129	11.7	104	9.1	151	12.4
50	84.4	10.3	124	14.5	101	11	147	15.2
60	80.9	12.3	119	17.3	98.5	13	144	18
70	77.6	14.2	115	20	96	14.9	141	20.7
80	74.5	16.1	111	22.8	93.6	16.8	138	23.5
90	71.6	18.1	107	25.6	91.2	18.8	135	26.3
100	68.8	20	104	28.3	88.8	20.7	132	29
110	-	-	-	-	86.5	22.7	-	-
120	-	-	-	-	84.2	24.6	-	-

Dimensional sketches

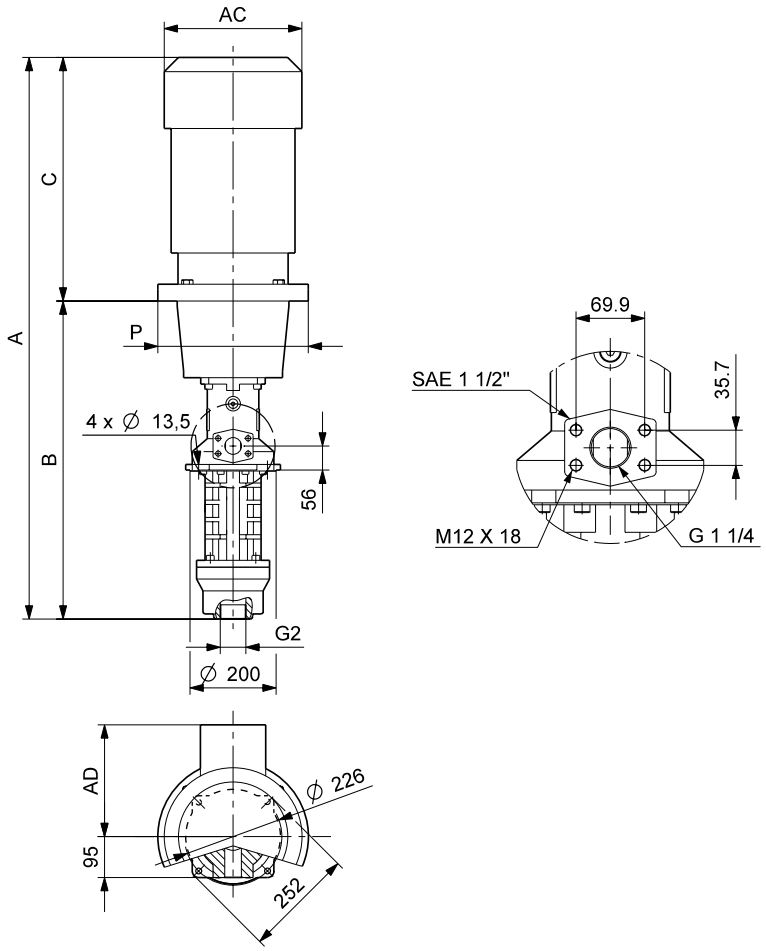

TM04 0144 0808

Dimensions and weights

Pump type	P2 [kW]	Dimensions [mm]						Net weight [kg]
		A	B	C	AC	AD	P	
MTS 80-20 R36 DQ	5.5	1089	335	754	220	134	300	95
MTS 80-30 R36 DQ	7.5	1089	335	754	220	134	300	96
MTS 80-40 R36 DQ	11	1200	335	865	260	172	350	124
MTS 80-60 R36 DQ	15	1214	335	879	320	197	350	137
MTS 80-80 R36 DQ	18.5	1254	335	919	320	197	350	157
MTS 80-100 R36 DQ	22	1354	335	1019	363	258	350	186
MTS 80-20 R46 DQ	7.5	1089	335	754	220	134	300	96
MTS 80-30 R46 DQ	11	1200	335	865	260	172	350	124
MTS 80-40 R46 DQ	15	1214	335	879	320	197	350	137
MTS 80-50 R46 DQ	18.5	1254	335	919	320	197	350	157
MTS 80-70 R46 DQ	22	1354	335	1019	363	258	350	186
MTS 80-100 R46 DQ	30	1410.5	335	1075.5	402	305	400	240

Performance range

Performance data at 1 mm²/s (emulsion)

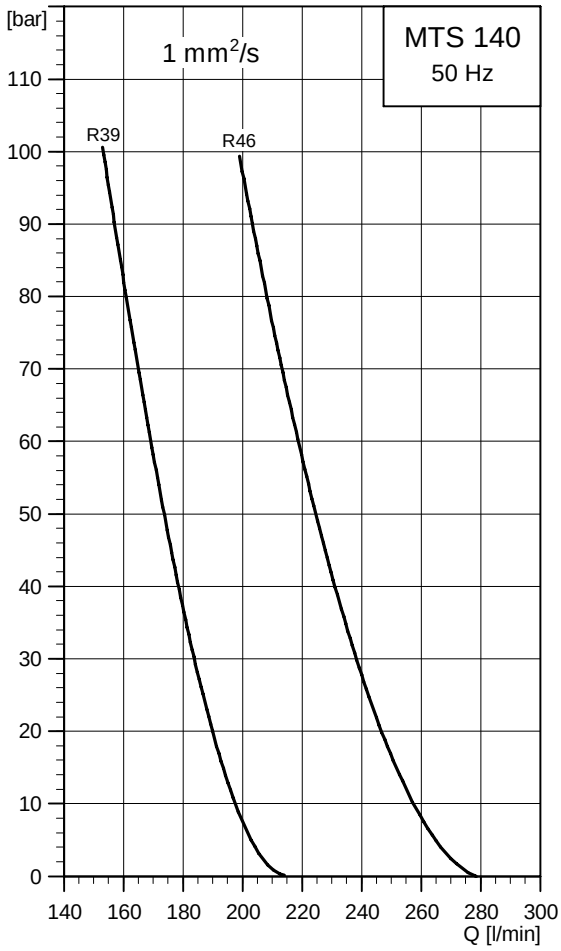

TM04 0030 4807

Performance data at 20 mm²/s (cutting oil with EP additives)

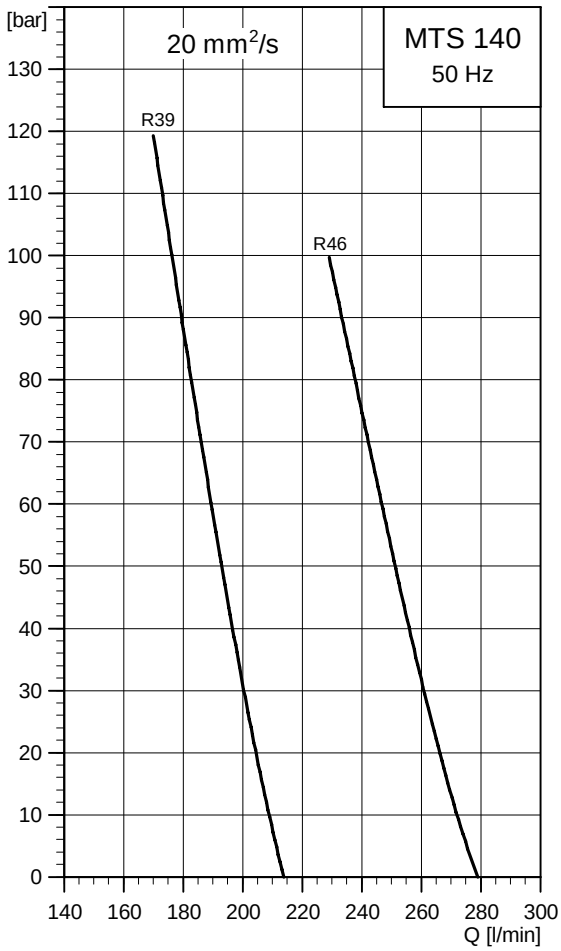

TM04 0031 4807

Performance table

Pressure	1 mm²/s (emulsion)				20 mm²/s (cutting oil with EP additives)			
	R39		R46		R39		R46	
	Q	P	Q	P	Q	P	Q	P
bar	l/min	kW	l/min	kW	l/min	kW	l/min	kW
0	214	1	279	1	214	2.1	279	2.1
10	198	4.6	257	5.6	209	5.6	272	6.7
20	190	8.1	247	10.3	204	9.2	266	11.3
30	184	11.7	238	14.9	200	12.8	261	16
40	178	15.3	231	19.6	197	16.3	256	20.6
50	173	18.8	225	24.2	193	19.9	251	25.3
60	169	22.4	219	28.8	190	23.5	247	29.9
70	166	26	213	33.5	186	27	242	34.6
80	161	29.5	208	38.1	183	30.6	238	39.2
90	157	33.1	203	42.8	179	34.2	233	43.8
100	153	36.7	199	47.4	176	37.7	229	-48.5
110	-	-	-	-	173	41.3	-	-
120	-	-	-	-	170	44.9	-	-

Dimensional sketches

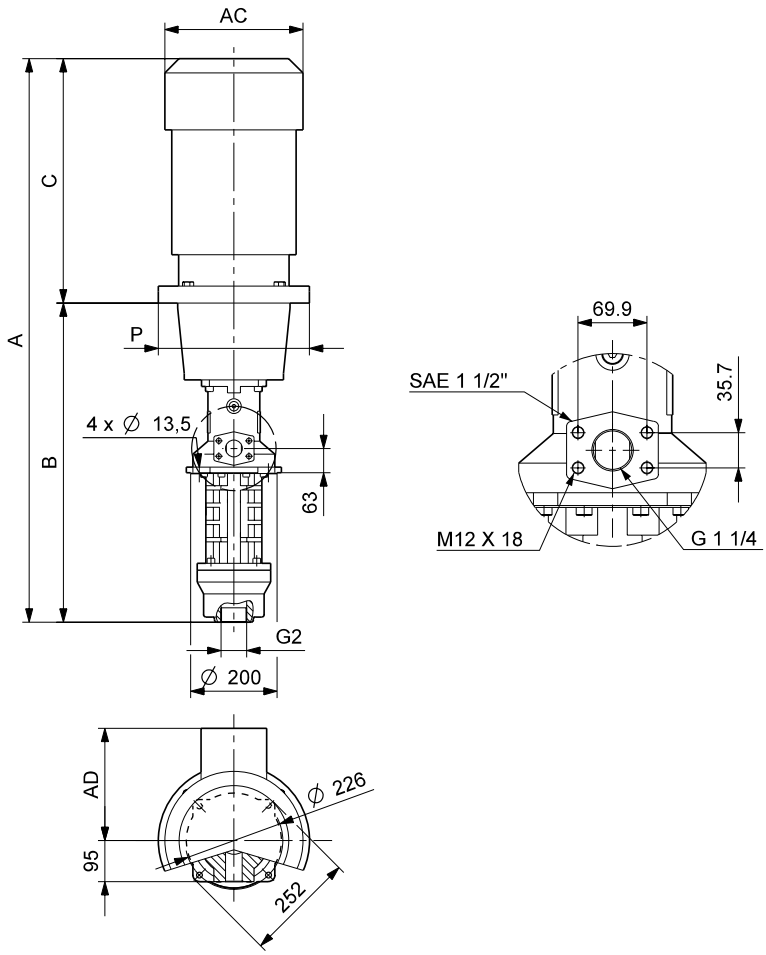

TM04 0628 0808

Dimensions and weights

Pump type	P2 [kW]	Dimensions [mm]						Net weight [kg]
		A	B	C	AC	AD	P	
MTS 140-20 R39 DQ	11	1300	386	914	260	172	350	144
MTS 140-30 R39 DQ	15	1314	386	928	320	197	350	157
MTS 140-40 R39 DQ	18.5	1354	386	968	320	197	350	177
MTS 140-50 R39 DQ	22	1438	386	1052	363	258	350	207
MTS 140-70 R39 DQ	30	1494.5	386	1108.5	402	305	400	260
MTS 140-90 R39 DQ	37	1494.5	386	1108.5	402	305	400	295
MTS 140-100 R39 DQ	45	1575	386	1189	442	325	450	412
MTS 140-20 R46 DQ	15	1314	386	928	320	197	350	157
MTS 140-30 R46 DQ	18.5	1354	386	968	320	197	350	177
MTS 140-40 R46 DQ	22	1438	386	1052	363	258	350	207
MTS 140-50 R46 DQ	30	1494.5	386	1108.5	402	305	400	260
MTS 140-70 R46 DQ	37	1494.5	386	1108.5	402	305	400	295
MTS 140-80 R46 DQ	45	1575	386	1189	442	325	450	412
MTS 140-100 R46 DQ	55	1627	386	1241	495	392	550	507

Performance range

Performance data at 1 mm²/s (emulsion)

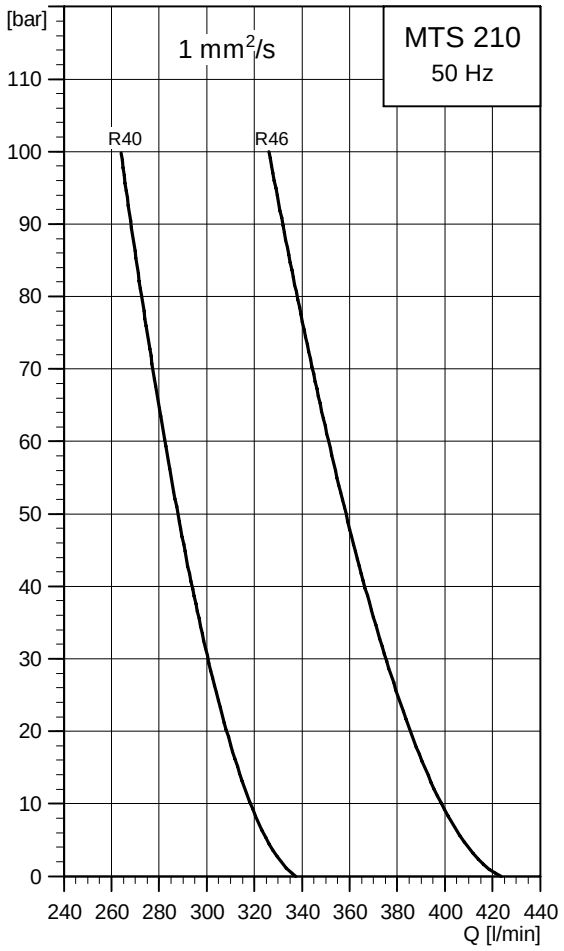

TM04 0030 4807

Performance data at 20 mm²/s (cutting oil with EP additives)

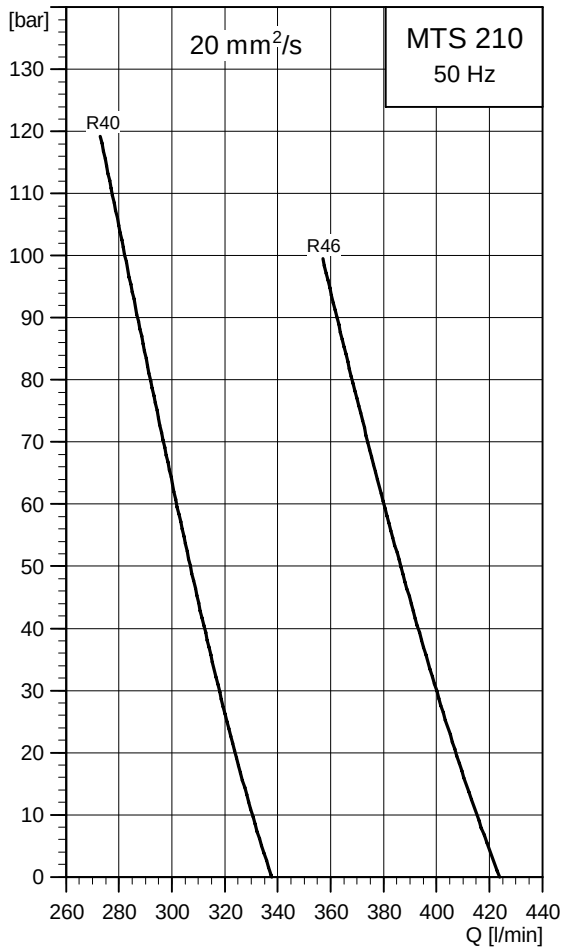

TM04 0031 4807

Performance table

Pressure	1 mm²/s (emulsion)				20 mm²/s (cutting oil with EP additives)			
	R40		R46		R40		R46	
	Q	P	Q	P	Q	P	Q	P
bar	l/min	kW	l/min	kW	l/min	kW	l/min	kW
0	338	1.7	424	1.7	338	3.5	424	3.5
10	318	7.3	398	8.8	330	9.2	415	10.6
20	308	13	386	15.8	324	14.8	407	17.7
30	301	18.6	375	22.9	318	20.4	400	24.8
40	294	24.2	366	30	312	26.1	393	31.8
50	288	29.9	359	37.1	307	31.7	387	38.9
60	282	35.5	351	44.1	302	37.3	380	46
70	277	41.1	344	51.2	297	43	374	53.1
80	273	46.8	338	58.3	292	48.6	368	60.1
90	268	52.4	332	65.4	287	54.2	362	67.2
100	264	58	326	72.4	282	59.9	357	74.3
110	-	-	-	-	277	65.5	-	-
120	-	-	-	-	273	71.1	-	-

Dimensional sketches

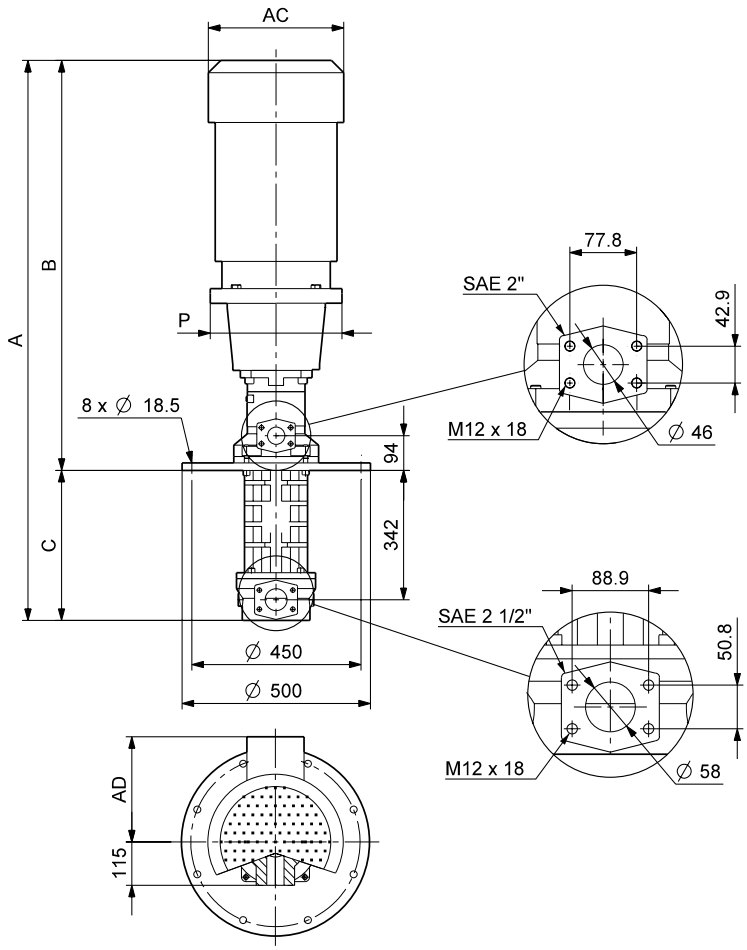

TM04 0145 0808

Dimensions and weights

Pump type	P2 [kW]	Dimensions [mm]						Net weight [kg]
		A	B	C	AC	AD	P	
MTS 210-20 R40 D 8.6	15	1347	397	950	320	197	350	182
MTS 210-30 R40 D 8.6	22	1471	397	1074	363	258	350	235
MTS 210-40 R40 D 8.6	30	1527.5	397	1130.5	402	305	400	289
MTS 210-50 R40 D 8.6	37	1527.5	397	1130.5	402	305	400	320
MTS 210-70 R40 D 8.6	45	1608	397	1211	442	325	450	437
MTS 210-90 R40 D 8.6	55	1660	397	1263	495	392	550	532
MTS 210-100 R40 D 8.6	75	1733	397	1336	555	432	550	642
MTS 210-20 R46 D 8.6	18.5	1387	397	990	320	197	350	202
MTS 210-30 R46 D 8.6	30	1527.5	397	1130.5	402	305	400	289
MTS 210-40 R46 D 8.6	37	1527.5	397	1130.5	402	305	400	320
MTS 210-50 R46 D 8.6	45	1608	397	1211	442	325	450	437
MTS 210-70 R46 D 8.6	55	1660	397	1263	495	392	550	532
MTS 210-90 R46 D 8.6	75	1733	397	1336	555	432	550	642

Performance range

Performance data at 1 mm²/s (emulsion)

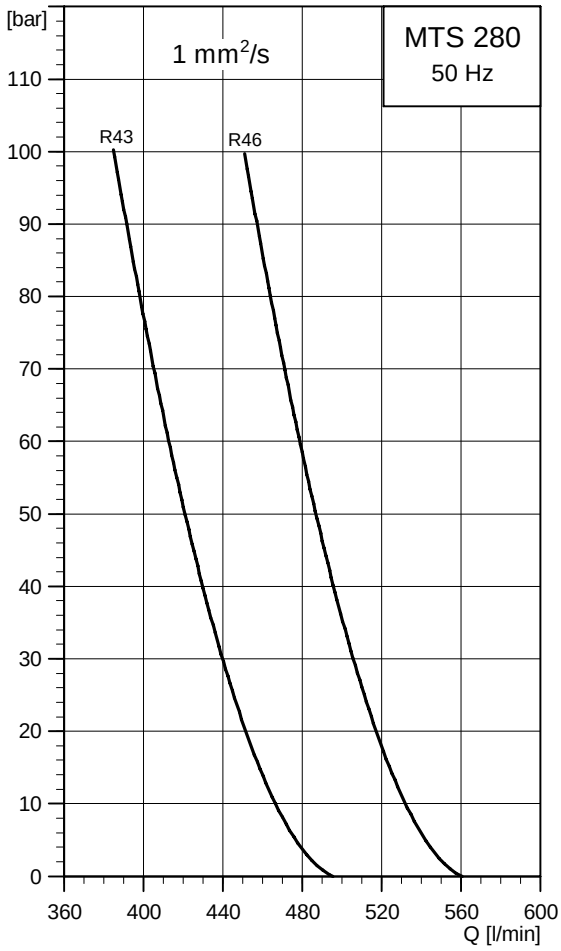

TM04 0030 4807

Performance data at 20 mm²/s (cutting oil with EP additives)

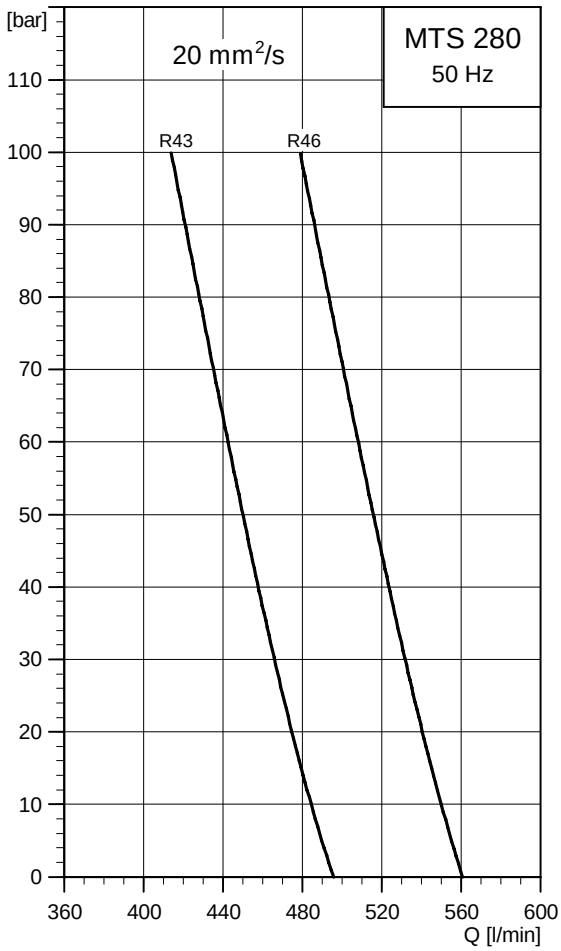

TM04 0031 4807

Performance table

Pressure	1 mm²/s (emulsion)				20 mm²/s (cutting oil with EP additives)			
	R43		R46		R43		R46	
	Q	P	Q	P	Q	P	Q	P
bar	l/min	kW	l/min	kW	l/min	kW	l/min	kW
0	496	2.8	561	2.8	496	5.9	561	5.9
10	466	11.1	532	12.2	484	14.1	550	15.2
20	452	19.4	517	21.5	475	22.4	540	24.6
30	440	27.6	506	30.9	466	30.7	532	33.9
40	430	35.9	496	40.2	458	38.9	524	43.3
50	421	44.1	487	49.6	450	47.2	516	52.7
60	413	52.4	479	59	443	55.5	508	62
70	405	60.7	471	68.3	435	63.7	501	71.4
80	398	68.9	464	77.7	428	72	493	80.7
90	392	77.2	457	87	421	80.2	486	90.1
100	385	85.5	451	96.4	414	88.5	479	99.4
110	-	-	-	-	-	-	-	-
120	-	-	-	-	-	-	-	-

Dimensional sketches

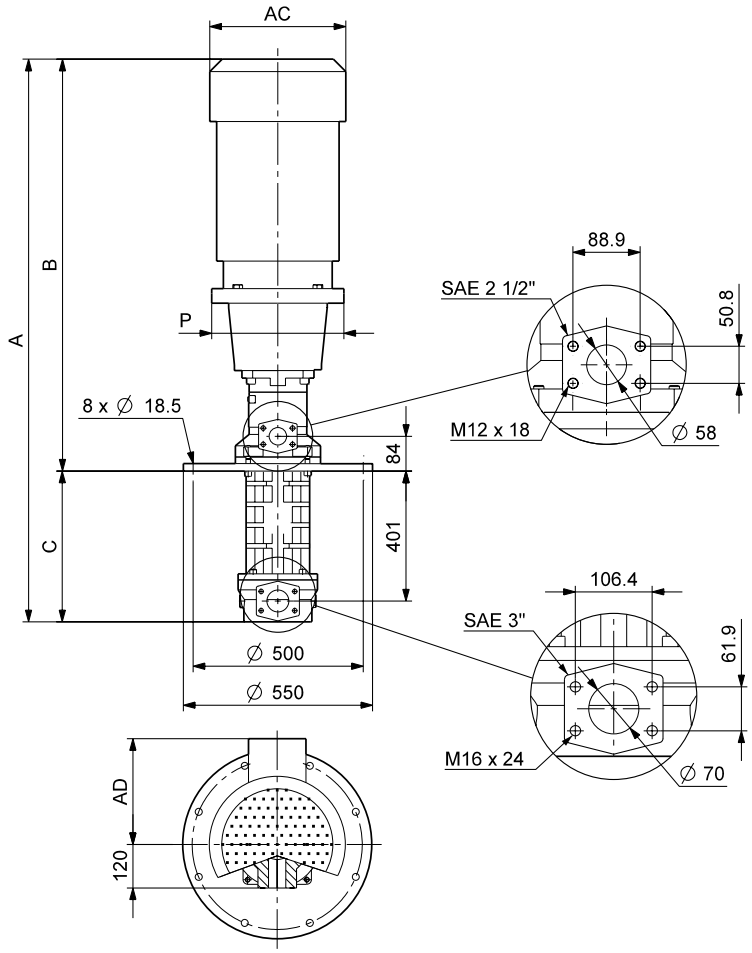

TM04 0629 0808

Dimensions and weights

Pump type	P2 [kW]	Dimensions [mm]						Net weight [kg]
		A	B	C	AC	AD	P	
MTS 280-20 R43 D 8.6	22	1605	467	1138	363	258	350	289
MTS 280-30 R43 D 8.6	30	1657.5	467	1190.5	402	305	400	343
MTS 280-40 R43 D 8.6	45	1714	467	1247	442	325	450	489
MTS 280-60 R43 D 8.6	55	1783	467	1316	495	392	550	582
MTS 280-80 R43 D 8.6	75	1856	467	1389	555	432	550	699
MTS 280-100 R43 D 8.6	90	1966	467	1499	555	432	550	784
MTS 280-20 R46 D 8.6	30	1657.5	467	1190.5	402	305	400	343
MTS 280-30 R46 D 8.6	37	1657.5	467	1190.5	402	305	400	371
MTS 280-40 R46 D 8.6	45	1714	467	1247	442	325	450	489
MTS 280-50 R46 D 8.6	55	1783	467	1316	495	392	550	582
MTS 280-70 R46 D 8.6	75	1856	467	1389	555	432	550	699
MTS 280-80 R46 D 8.6	90	1966	467	1499	555	432	550	784
MTS 280-90 R46 D 8.6	110	1978	467	1511	610	495	660	959
MTS 280-100 R46 D 8.6	110	1978	467	1511	610	495	660	959

Performance range

Performance data at 1 mm²/s (emulsion)

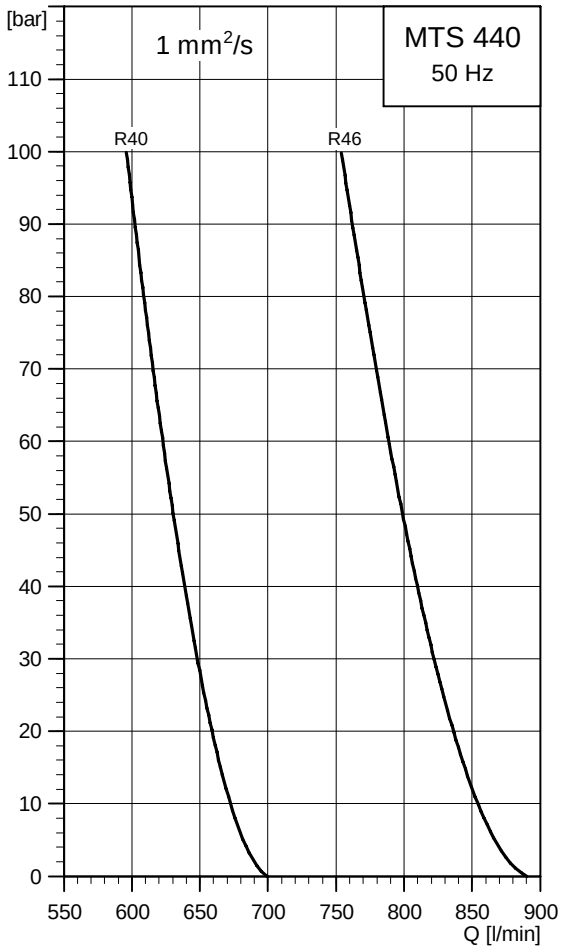

TM04 0030 4807

Performance data at 20 mm²/s (cutting oil with EP additives)

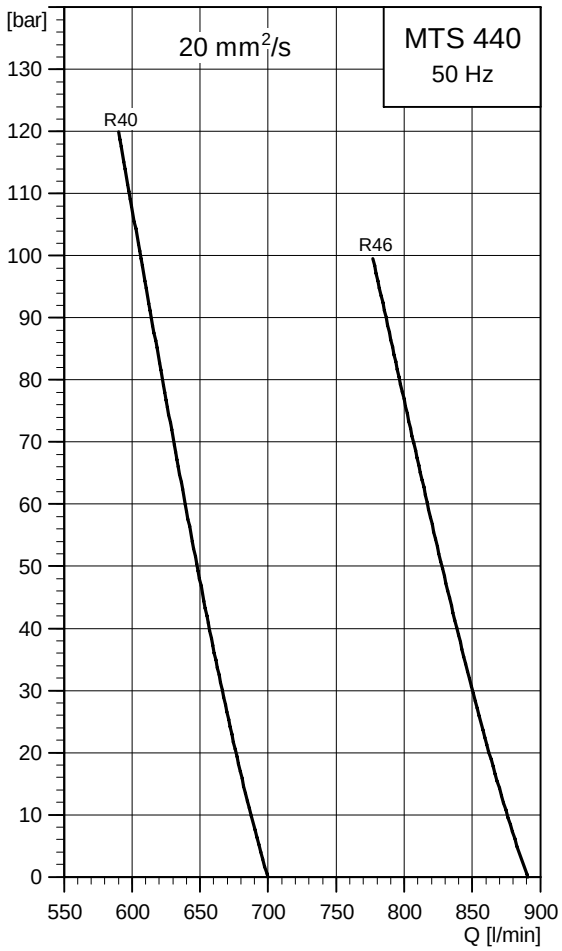

TM04 0031 4807

Performance table

Pressure	1 mm²/s (emulsion)				20 mm²/s (cutting oil with EP additives)			
	R40		R46		R40		R46	
	Q	P	Q	P	Q	P	Q	P
bar	l/min	kW	l/min	kW	l/min	kW	l/min	kW
0	700	4.4	891	4.4	700	9.1	891	9.1
10	672	16	854	19.2	687	20.8	875	24
20	659	27.7	836	34.1	676	32.5	862	38.8
30	648	39.4	822	48.9	666	44.1	850	53.7
40	639	51	810	63.8	657	55.8	839	68.6
50	630	62.7	799	78.6	648	67.5	828	83.4
60	623	74.4	789	93.5	639	79.2	817	98.3
70	615	86.1	779	108	631	90.8	807	113
80	609	97.7	770	123	622	103	796	128
90	602	109.4	762	138	614	114	786	143
100	596	121.1	754	153	606	126	777	158
110	-	-	-	-	598	138	-	-
120	-	-	-	-	590	149	-	-

Dimensional sketches

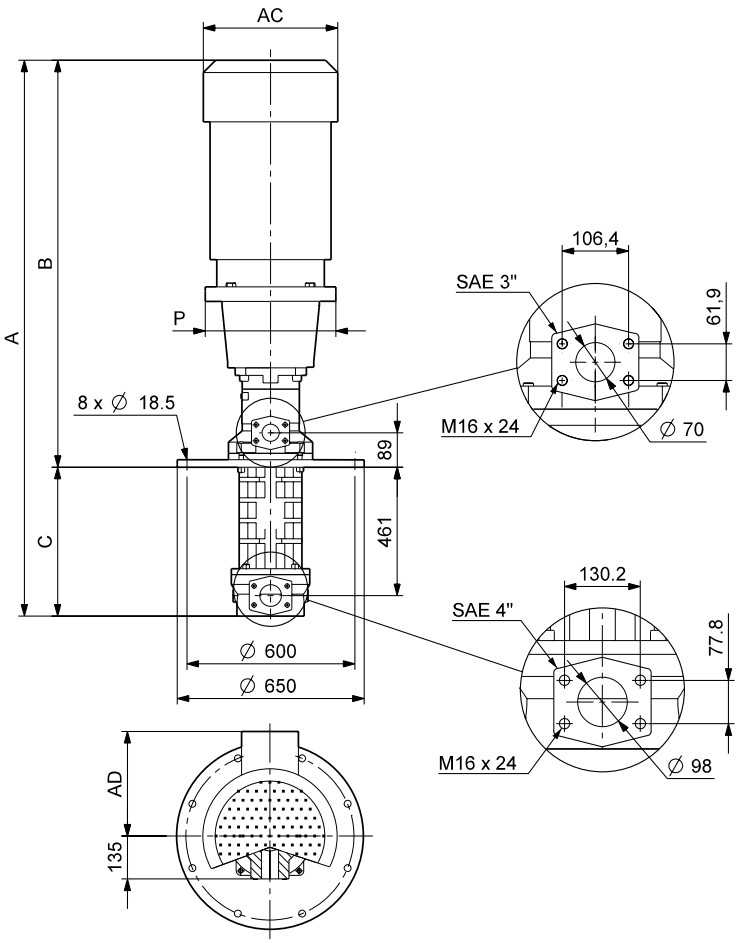

Dimensions and weights

Pump type	P2 [kW]	Dimensions [mm]						Net weight [kg]
		A	B	C	AC	AD	P	
MTS 440-20 R40 D 8.6	30	1735.5	546	1189.5	402	305	400	411
MTS 440-30 R40 D 8.6	45	1792	546	1246	442	325	450	554
MTS 440-40 R40 D 8.6	55	1861	546	1315	495	392	550	647
MTS 440-50 R40 D 8.6	75	1934	546	1388	555	432	550	764
MTS 440-70 R40 D 8.6	90	2044	546	1498	555	432	550	849
MTS 440-100 R40 D 8.6	132	2251	546	1705	610	495	660	1157
MTS 440-20 R46 D 8.6	37	1735.5	546	1189.5	402	305	400	436
MTS 440-30 R46 D 8.6	55	1861	546	1315	495	392	550	647
MTS 440-40 R46 D 8.6	75	1934	546	1388	555	432	550	764
MTS 440-50 R46 D 8.6	90	2044	546	1498	555	432	550	849
MTS 440-60 R46 D 8.6	110	2091	546	1545	610	495	660	1023
MTS 440-80 R46 D 8.6	132	2251	546	1705	610	495	660	1157
MTS 440-100 R46 D 8.6	160	2251	546	1705	610	495	660	1297

Performance range

Performance data at 1 mm²/s (emulsion)

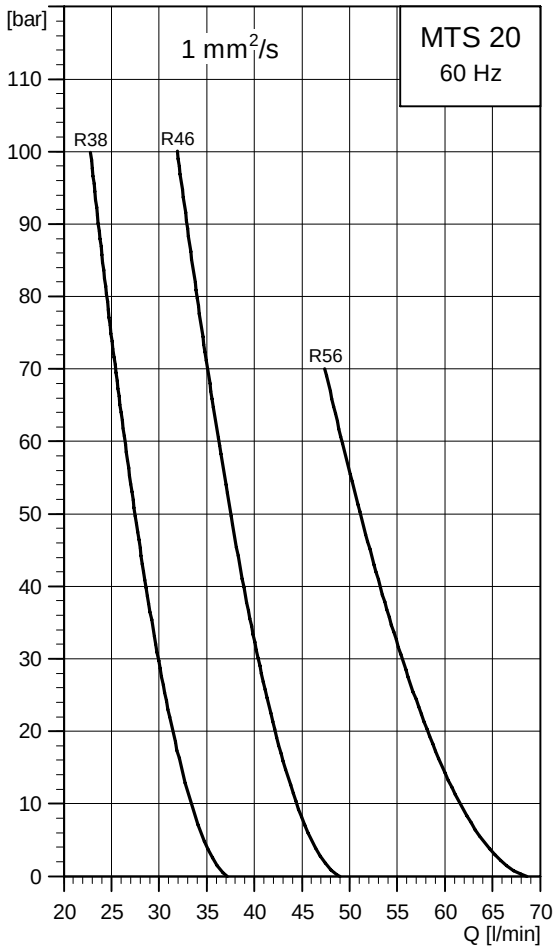

TM04 0030 4807

Performance data at 20 mm²/s (cutting oil with EP additives)

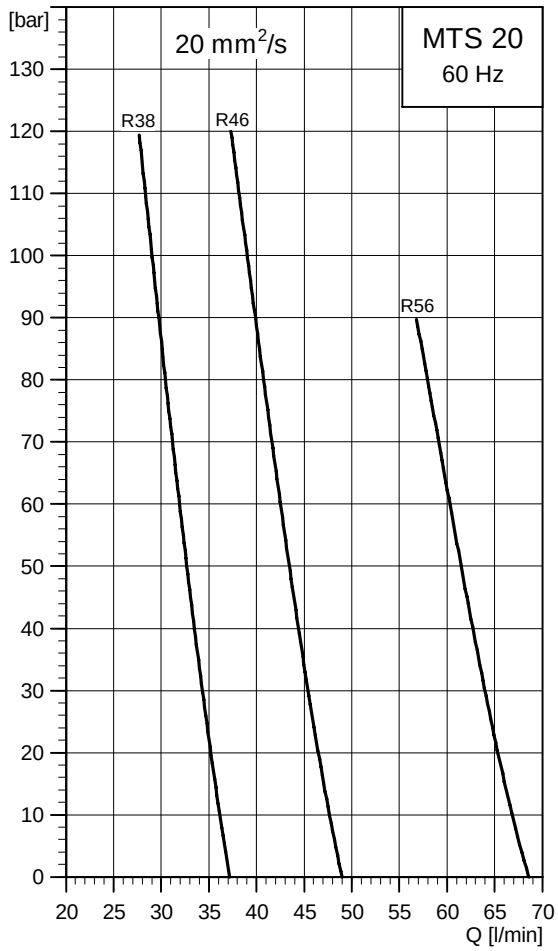

TM04 0031 4807

Performance table

Pressure	1 mm²/s (emulsion)						20 mm²/s (cutting oil with EP additives)					
	R38		R46		R56		R38		R46		R56	
	Q	P	Q	P	Q	P	Q	P	Q	P	Q	P
bar	l/min	kW	l/min	kW	l/min	kW	l/min	kW	l/min	kW	l/min	kW
0	37.2	0.4	49	0.4	68.6	0.4	37.2	0.4	49	0.4	68.6	0.4
10	33.3	1	44.4	1.2	61.6	1.6	36.1	1	47.6	1.2	66.8	1.6
20	31.5	1.7	42.2	2	58.2	2.7	35.2	1.7	46.5	2	65.3	2.7
30	29.9	2.3	40.4	2.9	55.5	3.8	34.3	2.3	45.4	2.9	64	3.8
40	28.6	2.9	38.9	3.7	53.2	5	33.5	2.9	44.4	3.7	62.7	5
50	27.5	3.5	37.5	4.5	51.1	6.1	32.7	3.5	43.5	4.5	61.5	6.1
60	26.4	4.1	36.2	5.3	49.2	7.3	31.9	4.1	42.5	5.3	60.3	7.3
70	25.4	4.8	35.1	6.1	47.4	8.4	31.2	4.8	41.6	6.1	59.1	8.4
80	24.5	5.4	34	6.9	-	-	30.5	5.4	40.7	6.9	57.9	9.6
90	23.6	6	32.9	7.8	-	-	29.7	6	39.9	7.8	56.8	10.7
100	22.8	6.6	31.9	8.6	-	-	29	6.6	39	8.6	-	-
110	-	-	-	-	-	-	28.3	7.2	38.2	9.4	-	-
120	-	-	-	-	-	-	27.7	7.9	37.3	10.2	-	-

Dimensional sketches

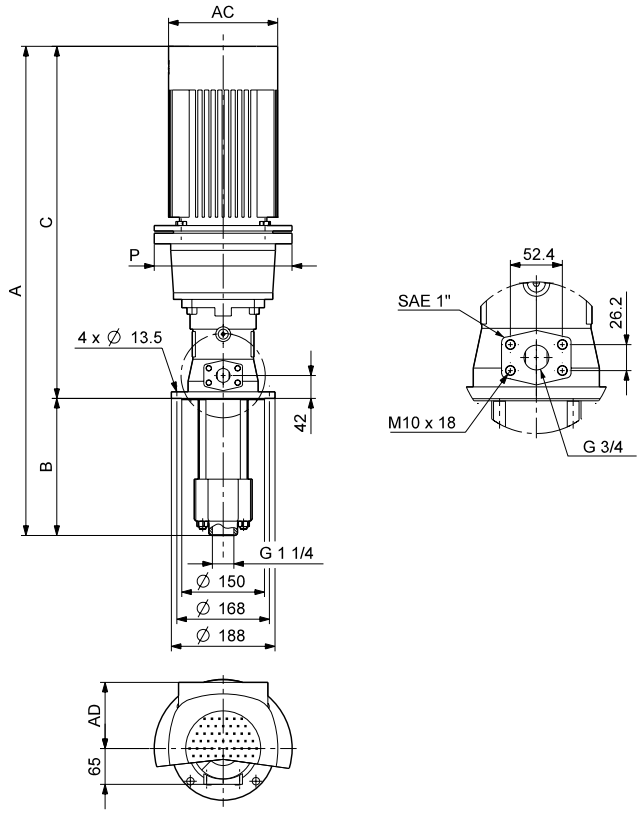

TM03 9163 3507

Dimensions and weights

Pump type	P2 [kW]	Dimensions [mm]						Net weight [kg]
		A	B	C	AC	AD	P	
MTS 20-50 R38 DQ	4	918	248	670	220	134	250	61
MTS 20-70 R38 DQ	5.5	961	248	713	220	134	300	70
MTS 20-100 R38 DQ	7.5	961	248	713	220	134	300	71
MTS 20-40 R46 DQ	4	918	248	670	220	134	250	61
MTS 20-50 R46 DQ	5.5	961	248	713	220	134	300	70
MTS 20-80 R46 DQ	7.5	961	248	713	220	134	300	71
MTS 20-100 R46 DQ	11	1078	248	830	260	172	350	99
MTS 20-30 R56 DQ	4	918	248	670	220	134	250	61
MTS 20-40 R56 DQ	5.5	961	248	713	220	134	300	70
MTS 20-50 R56 DQ	7.5	961	248	713	220	134	300	71
MTS 20-70 R56 DQ	11	1078	248	830	260	178	300	71

Performance range

Performance data at 1 mm²/s (emulsion)

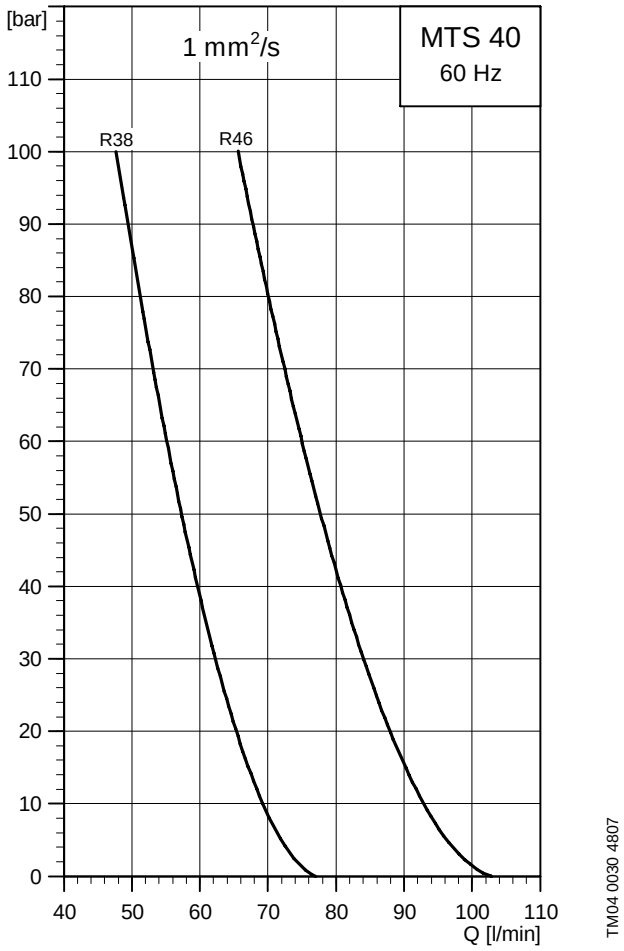

Performance data at 20 mm²/s (cutting oil with EP additives)

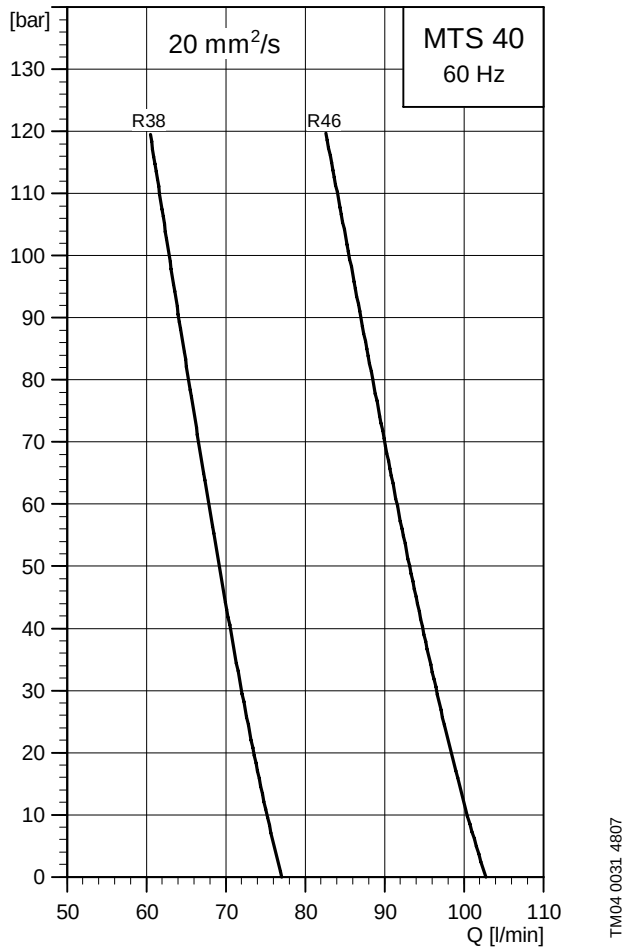

Performance table

Pressure	1 mm²/s (emulsion)				20 mm²/s (cutting oil with EP additives)			
	R38		R46		R38		R46	
	Q	P	Q	P	Q	P	Q	P
bar	l/min	kW	l/min	kW	l/min	kW	l/min	kW
0	77.1	0.5	103	0.5	77.1	1.1	102.8	1.1
10	69.2	1.8	92.8	2.2	75.1	2.4	100.3	2.8
20	65.3	3.1	87.9	4	73.5	3.7	98.4	4.6
30	62.3	4.4	84.1	5.7	72	5	96.5	6.3
40	59.7	5.7	80.7	7.4	70.5	6.3	94.8	8
50	57.3	6.9	77.7	9.1	69.2	7.5	93.2	9.7
60	55.1	8.2	75	10.8	67.9	8.8	91.6	11.4
70	53.1	9.5	72.4	12.5	66.6	10.1	90	13.1
80	51.2	10.8	70	14.2	65.3	11.4	88.5	14.8
90	49.4	12.1	67.8	15.9	64.1	12.7	87	16.5
100	47.7	13.4	65.6	17.7	62.8	14	85.5	18.3
110	-	-	-	-	61.6	15.3	84	20
120	-	-	-	-	60.5	16.5	82.6	21.7

Dimensional sketches

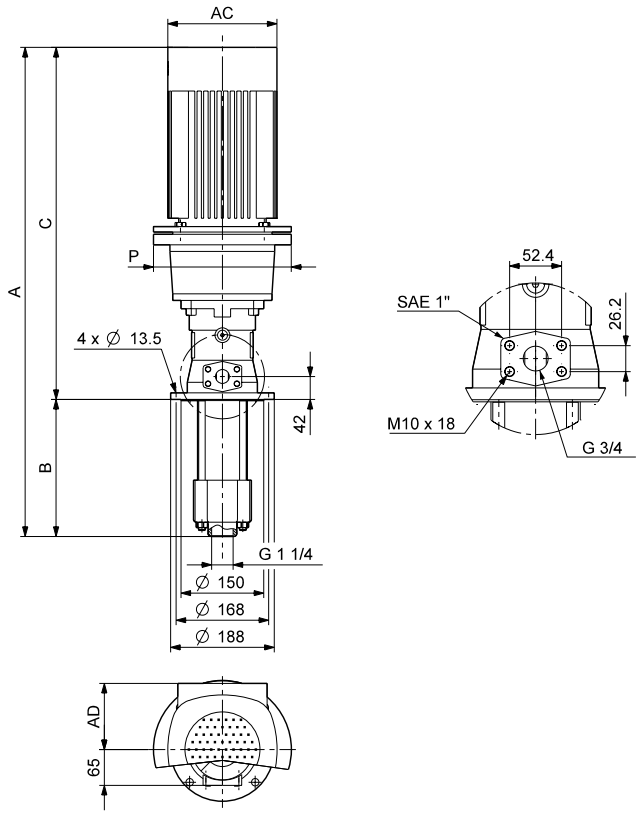

TM03 9163 3507

Dimensions and weights

Pump type	P2 [kW]	Dimensions [mm]						Net weight [kg]
		A	B	C	AC	AD	P	
MTS 40-30 R38 DQ	5.5	1011	286	725	220	134	300	75
MTS 40-50 R38 DQ	7.5	1011	286	725	220	134	300	76
MTS 40-70 R38 DQ	11	1128	286	842	260	172	350	104
MTS 40-100 R38 DQ	15	1142	286	856	320	197	350	117
MTS 40-30 R46 DQ	7.5	1011	286	725	220	134	300	76
MTS 40-50 R46 DQ	11	1128	286	842	260	172	350	104
MTS 40-80 R46 DQ	15	1142	286	856	320	197	350	117
MTS 40-100 R46 DQ	18.5	1182	286	896	320	197	350	137

Performance range

Performance data at 1 mm²/s (emulsion)

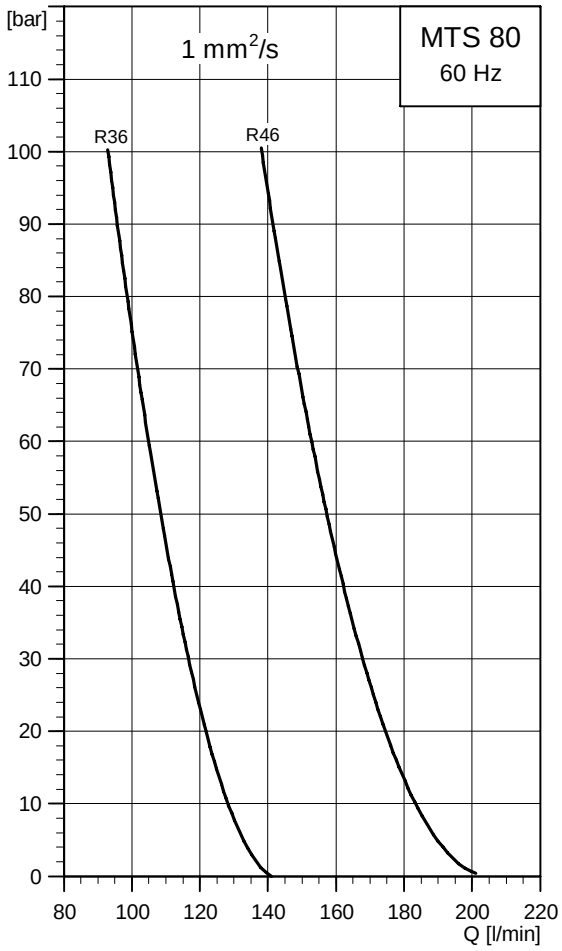

TM04 0030 4807

Performance data at 20 mm²/s (cutting oil with EP additives)

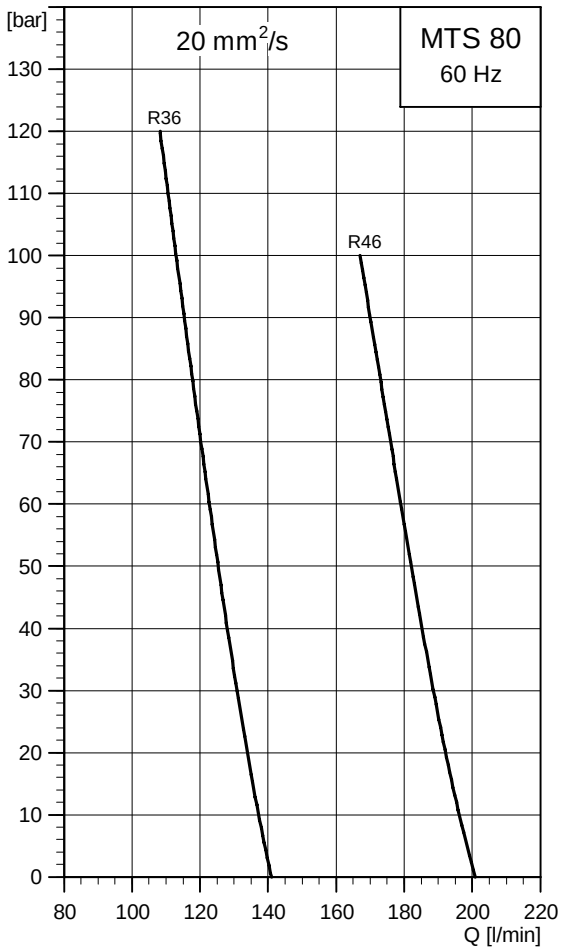

TM04 0031 4807

Performance table

Pressure	1 mm²/s (emulsion)				20 mm²/s (cutting oil with EP additives)			
	R36		R46		R36		R46	
	Q	P	Q	P	Q	P	Q	P
bar	l/min	kW	l/min	kW	l/min	kW	l/min	kW
0	141	0.8	201	0.8	141	1.8	201	1.8
10	128	3.2	184	4.2	137	4.1	196	5.1
20	122	5.5	176	7.5	134	6.4	192	8.5
30	117	7.8	161	10.9	131	8.8	189	11.8
40	112	10.2	164	14.2	128	11.1	185	15.1
50	108	12.5	158	17.6	125	13.5	182	18.5
60	105	14.9	154	20.9	123	15.8	179	21.8
70	102	17.2	150	24.2	120	18.2	176	25.2
80	98.6	19.6	145	27.6	118	20.5	173	28.5
90	95.7	21.9	142	30.9	115	22.8	170	31.9
100	92.9	24.2	138	34.3	113	25.2	167	35.2
110	-	-	-	-	111	27.5	-	-
120	-	-	-	-	108	29.9	-	-

Dimensional sketches

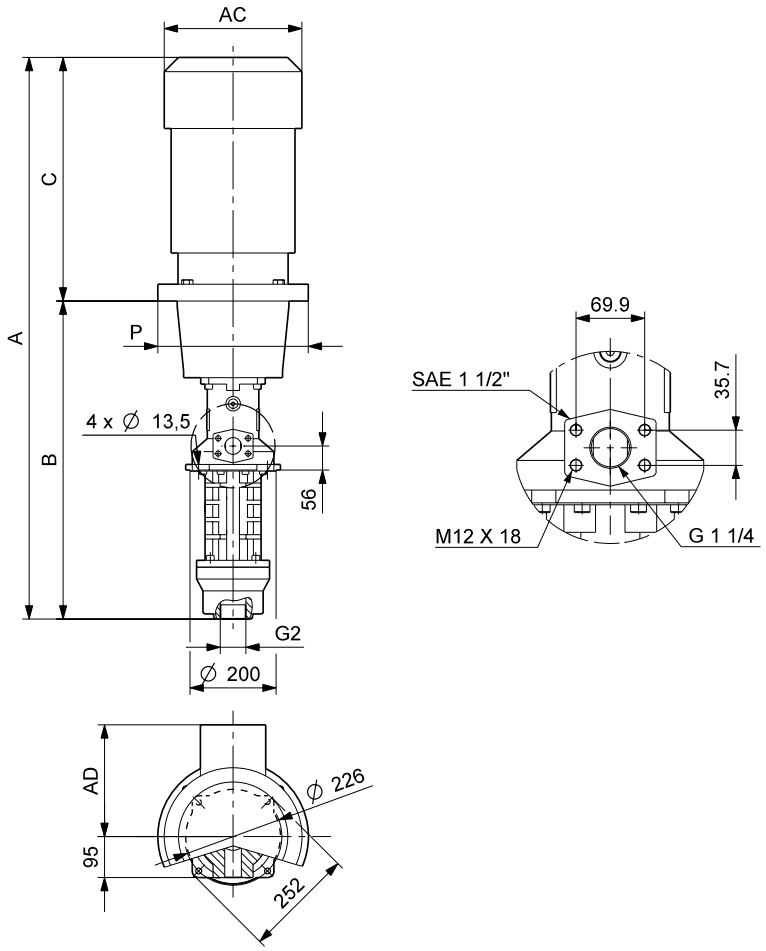

TM04 0144 0808

Dimensions and weights

Pump type	P2 [kW]	Dimensions [mm]						Net weight [kg]
		A	B	C	AC	AD	P	
MTS 80-30 R36 DQ	11	1200	335	865	260	172	350	124
MTS 80-50 R36 DQ	15	1214	335	879	320	197	350	137
MTS 80-70 R36 DQ	18.5	1254	335	919	320	197	350	157
MTS 80-80 R36 DQ	22	1354	335	1019	363	258	350	186
MTS 80-100 R36 DQ	30	1410.5	335	1075.5	402	305	400	240
MTS 80-40 R46 DQ	15	1214	335	879	320	197	350	137
MTS 80-50 R46 DQ	18.5	1254	335	919	320	197	350	157
MTS 80-60 R46 DQ	22	1354	335	1019	363	258	350	186
MTS 80-80 R46 DQ	30	1410.5	335	1075.5	402	305	400	240
MTS 80-100 R46 DQ	37	1410.5	335	1075.5	402	305	400	269

Performance range

Performance data at 1 mm²/s (emulsion)

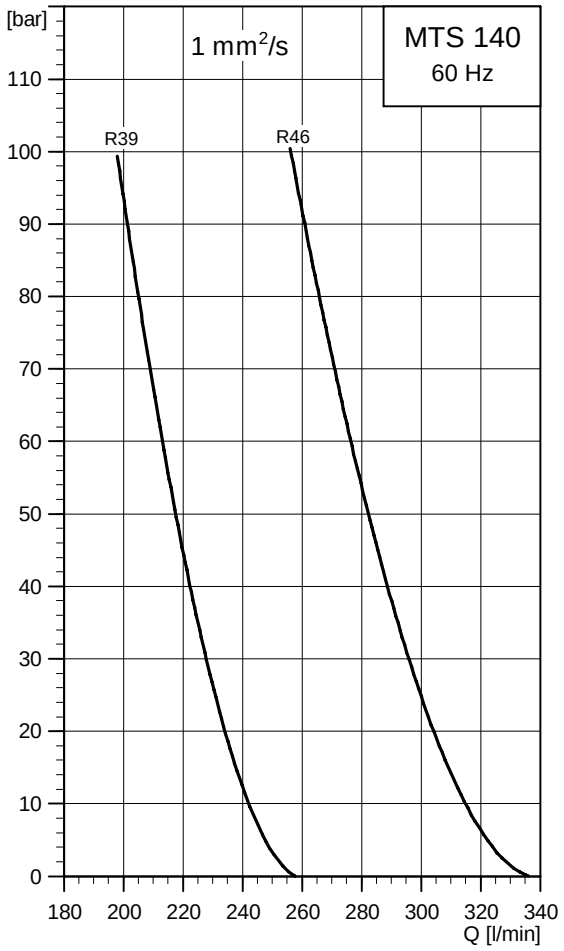

TM04 0030 4807

Performance data at 20 mm²/s (cutting oil with EP additives)

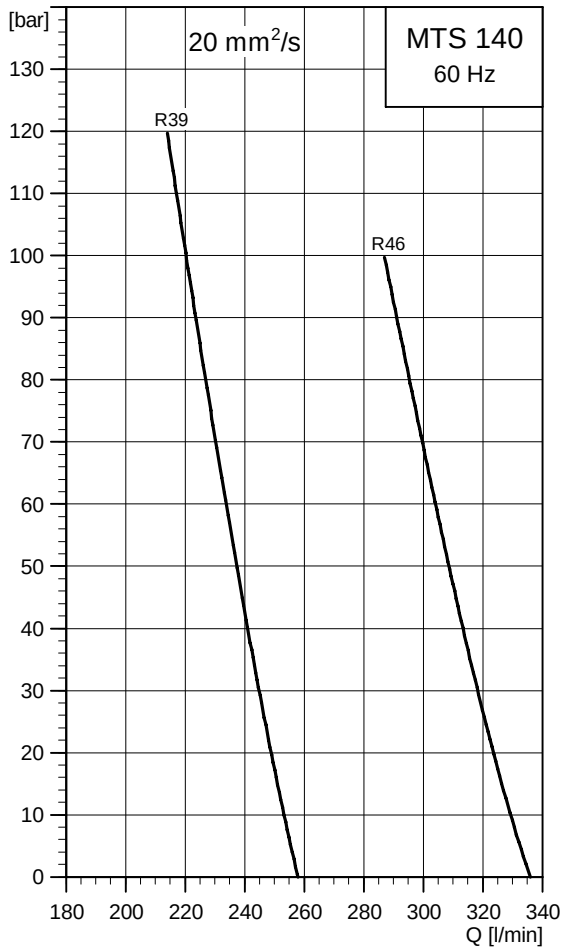

TM04 0031 4807

Performance table

Pressure	1 mm²/s (emulsion)				20 mm²/s (cutting oil with EP additives)			
	R39		R46		R39		R46	
	Q	P	Q	P	Q	P	Q	P
bar	l/min	kW	l/min	kW	l/min	kW	l/min	kW
0	258	1.3	336	1.3	258	2.7	336	2.7
10	242	5.6	315	6.9	253	7	329	8.3
20	234	9.9	304	12.5	249	11.3	324	13.9
30	228	14.2	296	18.12	245	15.7	318	19.5
40	222	18.5	289	23.7	241	20	313	25.1
50	218	22.8	282	29.3	237	24.3	309	30.7
60	213	27.1	276	34.9	234	28.6	304	36.3
70	209	31.4	271	40.5	230	32.9	300	41.9
80	205	35.7	266	46.1	227	37.2	295	47.6
90	201	40.1	261	51.7	224	41.5	291	53.2
100	198	44.4	256	57.3	220	45.8	287	58.8
110	-	-	-	-	217	50.1	-	-
120	-	-	-	-	214	54.4	-	-

Dimensional sketches

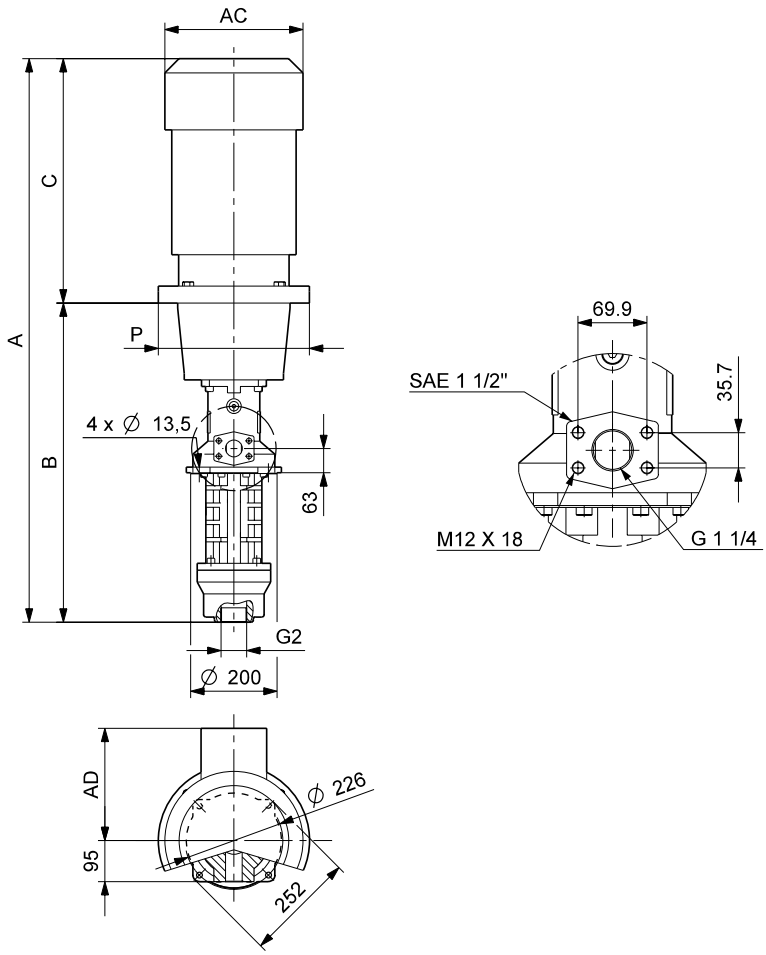

TM04 0628 0808

Dimensions and weights

Pump type	P2 [kW]	Dimensions [mm]						Net weight [kg]
		A	B	C	AC	AD	P	
MTS 140-20 R39 DQ	15	1314	386	928	320	197	350	157
MTS 140-30 R39 DQ	18.5	1354	386	968	320	197	350	177
MTS 140-40 R39 DQ	22	1438	386	1052	363	258	350	207
MTS 140-60 R39 DQ	30	1494.5	386	1108.5	402	305	400	260
MTS 140-80 R39 DQ	37	1494.5	386	1108.5	402	305	400	295
MTS 140-100 R39 DQ	45	1575	386	1189	442	325	450	412
MTS 140-30 R46 DQ	22	1438	386	1052	363	258	350	207
MTS 140-40 R46 DQ	30	1494.5	386	1108.5	402	305	400	260
MTS 140-60 R46 DQ	37	1494.5	386	1108.5	402	305	400	295
MTS 140-70 R46 DQ	45	1575	386	1189	442	325	450	412
MTS 140-80 R46 DQ	55	1627	386	1241	495	392	550	507
MTS 140-100 R46 DQ	75	1700	386	1314	555	432	550	617

Performance range

Performance data at 1 mm²/s (emulsion)

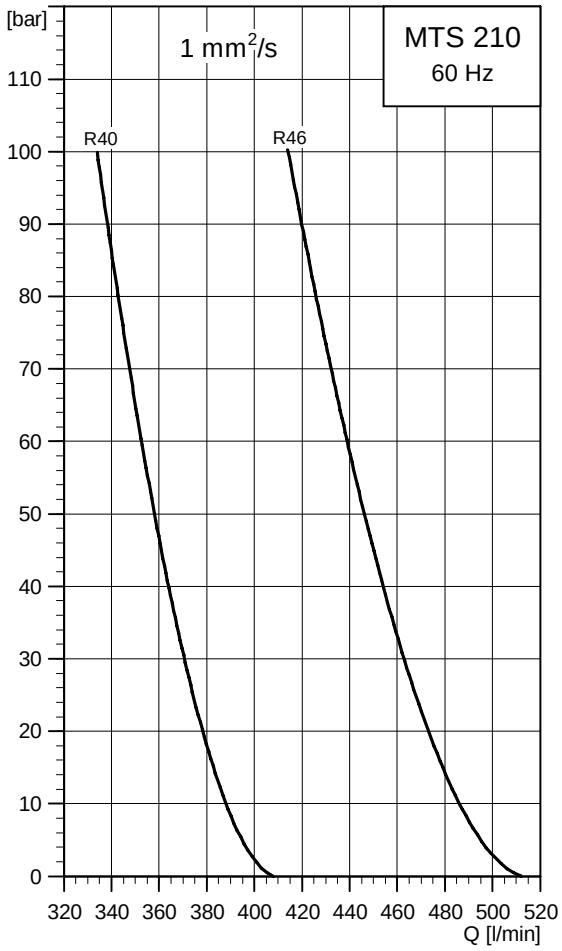

TM04 0030 4807

Performance data at 20 mm²/s (cutting oil with EP additives)

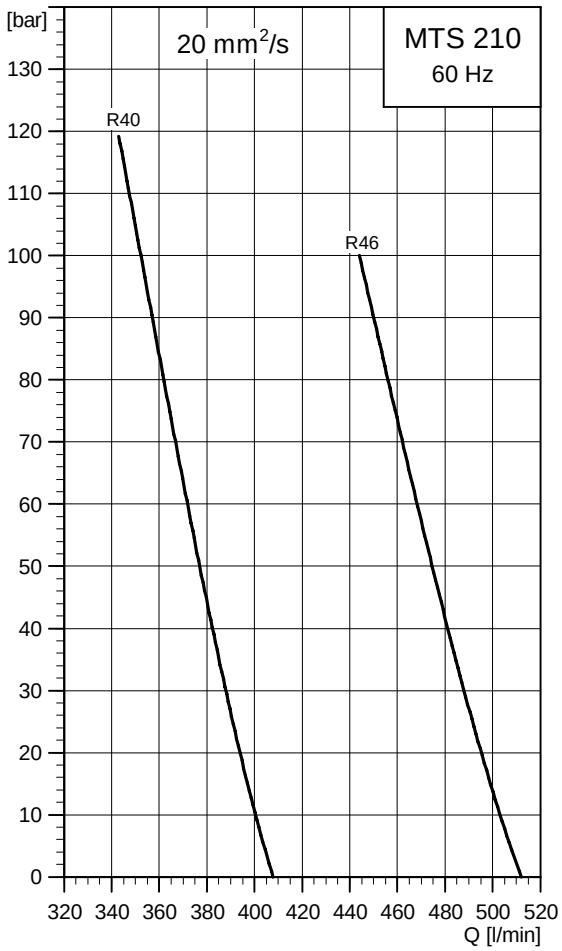

TM04 0031 4807

Performance table

Pressure	1 mm²/s (emulsion)				20 mm²/s (cutting oil with EP additives)			
	R40		R46		R40		R46	
	Q	P	Q	P	Q	P	Q	P
bar	l/min	kW	l/min	kW	l/min	kW	l/min	kW
0	408	2.3	512	2.3	408	4.7	512	4.7
10	388	9	486	10.8	400	11.5	503	13.2
20	378	15.8	473	19.3	394	18.3	495	21.8
30	371	22.6	463	27.9	388	25.1	488	30.3
40	364	29.4	454	36.4	382	31.9	481	38.8
50	358	36.2	446	44.9	377	38.7	475	47.4
60	352	43	439	53.5	372	45.5	468	55.9
70	348	49.8	432	62	367	52.3	462	64.5
80	343	56.6	426	70.6	362	59.1	456	73
90	338	63.4	420	79.1	357	65.9	450	81.5
100	334	70.2	414	87.6	352	72.7	444	90.1
110	-	-	-	-	347	79.5	-	-
120	-	-	-	-	343	86.3	-	-

Dimensional sketches

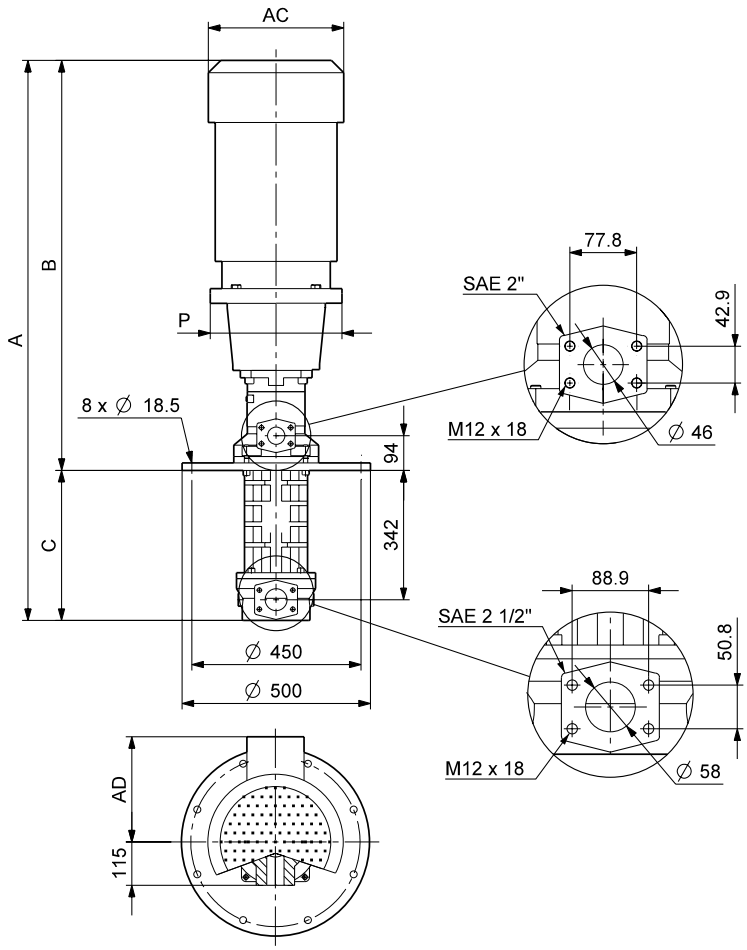

TM04 0145 0808

Dimensions and weights

Pump type	P2 [kW]	Dimensions [mm]						Net weight [kg]
		A	B	C	AC	AD	P	
MTS 210-30 R40 D 8.6	30	1527.5	397	1130.5	402	305	400	289
MTS 210-40 R40 D 8.6	37	1527.5	397	1130.5	402	305	400	320
MTS 210-50 R40 D 8.6	45	1608	397	1211	442	325	450	437
MTS 210-70 R40 D 8.6	55	1660	397	1263	495	392	550	532
MTS 210-100 R40 D 8.6	75	1733	397	1336	555	432	550	642
MTS 210-30 R46 D 8.6	37	1527.5	397	1130.5	402	305	400	320
MTS 210-40 R46 D 8.6	45	1608	397	1211	442	325	450	437
MTS 210-50 R46 D 8.6	55	1660	397	1263	495	392	550	532
MTS 210-70 R46 D 8.6	75	1733	397	1336	555	432	550	642
MTS 210-90 R46 D 8.6	90	1843	397	1446	555	432	550	727
MTS 210-100 R46 D 8.6	110	1872	397	1475	610	495	660	902

Performance range

Performance data at 1 mm²/s (emulsion)

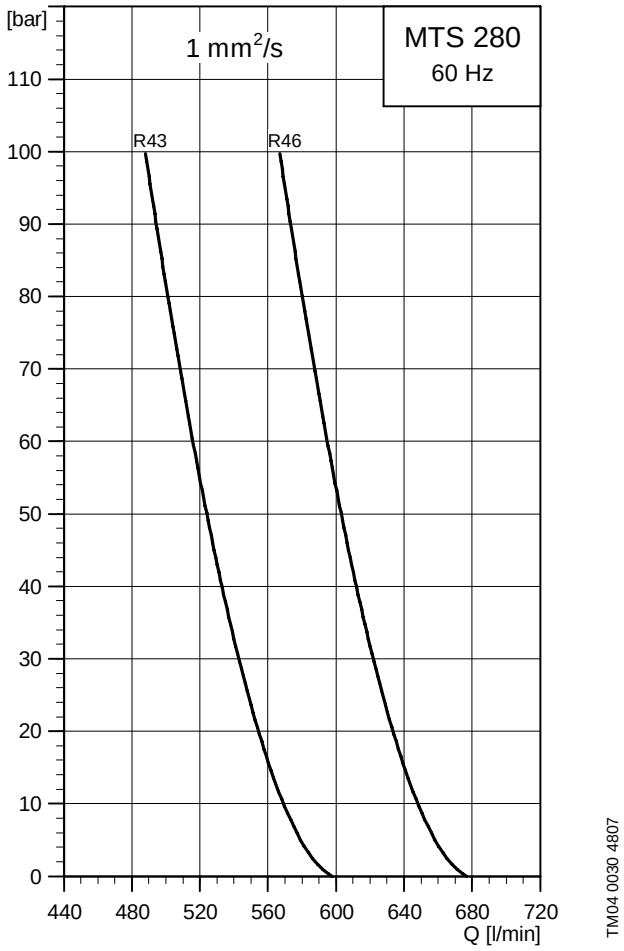

Performance data at 20 mm²/s (cutting oil with EP additives)

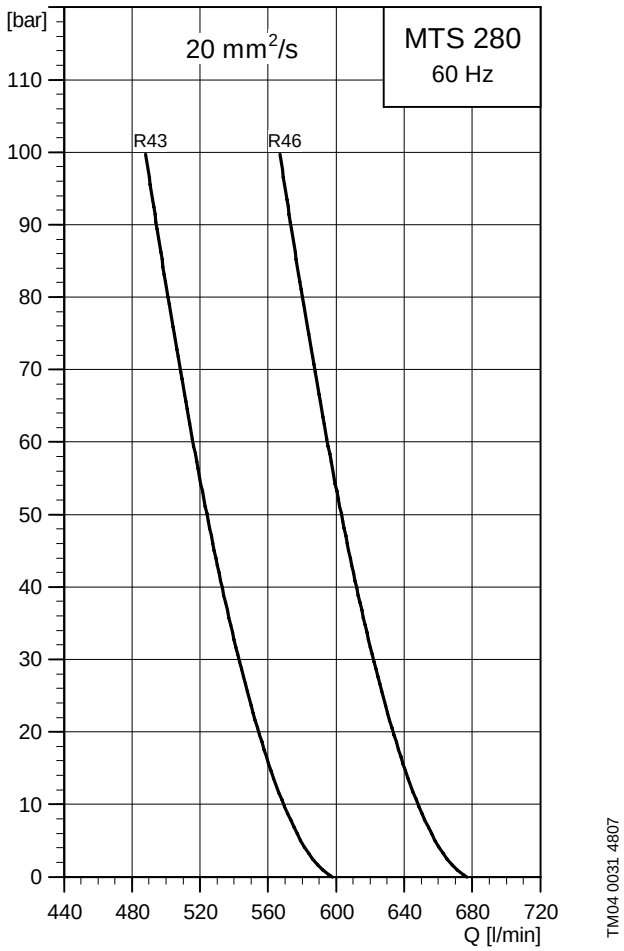

Performance table

Pressure	1 mm²/s (emulsion)				20 mm²/s (cutting oil with EP additives)			
	R43		R46		R43		R46	
	Q	P	Q	P	Q	P	Q	P
bar	l/min	kW	l/min	kW	l/min	kW	l/min	kW
0	598	3.8	677	3.8	598	7.8	677	7.8
10	569	13.7	648	15	587	17.8	666	19.1
20	554	23.7	633	26.3	577	27.7	657	30.4
30	543	33.7	622	37.6	569	37.7	648	41.7
40	533	43.6	612	48.9	561	47.7	640	53
50	524	53.6	603	60.2	553	57.7	632	64.2
60	516	63.6	595	71.5	545	67.6	624	75.5
70	508	73.6	587	82.8	538	77.6	617	86.8
80	501	83.5	580	94.1	530	87.6	609	98.1
90	494	93.5	573	105	523	97.6	602	109
100	488	104	567	117	516	108	595	121
110	-	-	-	-	-	-	-	-
120	-	-	-	-	-	-	-	-

Dimensional sketches

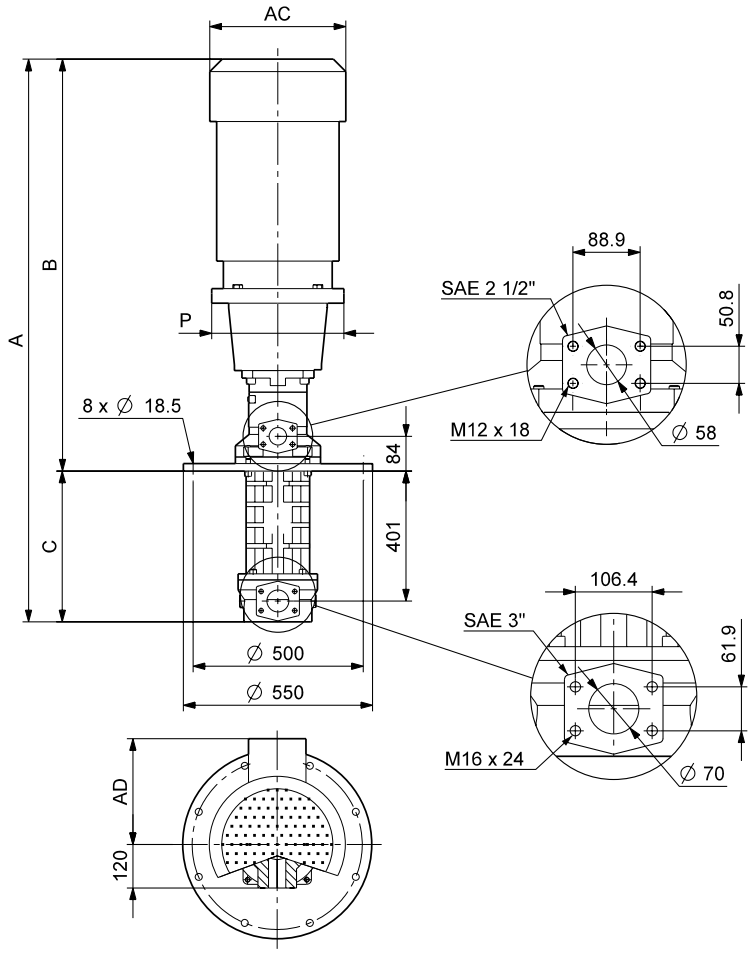

Dimensions and weights

Pump type	P2 [kW]	Dimensions [mm]						Net weight [kg]
		A	B	C	AC	AD	P	
MTS 280-30 R43 D 8.6	45	1714	467	1247	442	325	450	489
MTS 280-40 R43 D 8.6	55	1783	467	1316	495	392	550	582
MTS 280-60 R43 D 8.6	75	1856	467	1389	555	432	550	699
MTS 280-80 R43 D 8.6	90	1966	467	1499	555	432	550	784
MTS 280-100 R43 D 8.6	110	1978	467	1511	610	495	660	959
MTS 280-20 R46 D 8.6	37	1657.5	467	1190.5	402	305	400	371
MTS 280-30 R46 D 8.6	45	1714	467	1247	442	325	450	489
MTS 280-40 R46 D 8.6	55	1783	467	1316	495	392	550	582
MTS 280-50 R46 D 8.6	75	1856	467	1389	555	432	550	699
MTS 280-70 R46 D 8.6	90	1966	467	1499	555	432	550	784
MTS 280-80 R46 D 8.6	110	1978	467	1511	610	495	660	959
MTS 280-100 R46 D 8.6	132	2138	467	1671	610	495	660	1084

Performance range

Performance data at 1 mm²/s (emulsion)

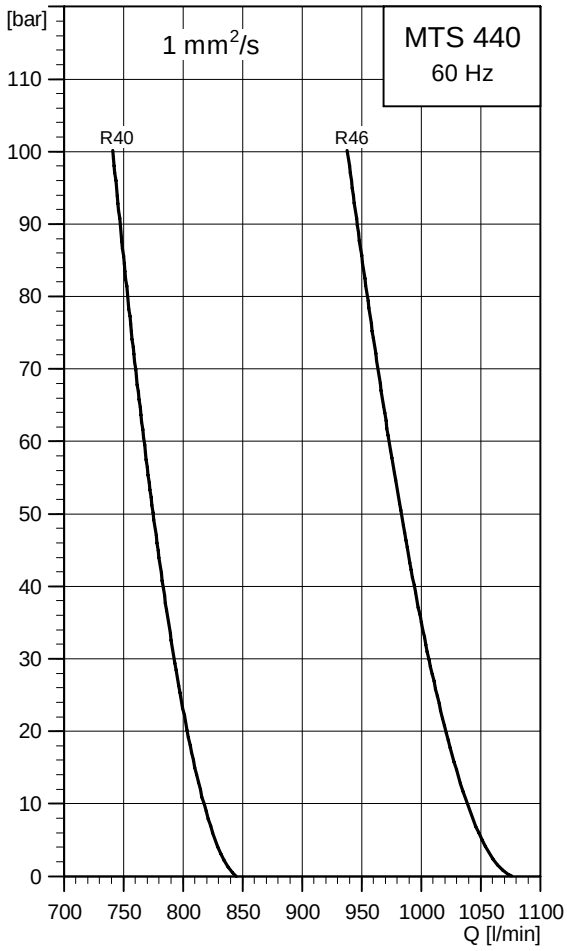

TM04 0030 4807

Performance data at 20 mm²/s (cutting oil with EP additives)

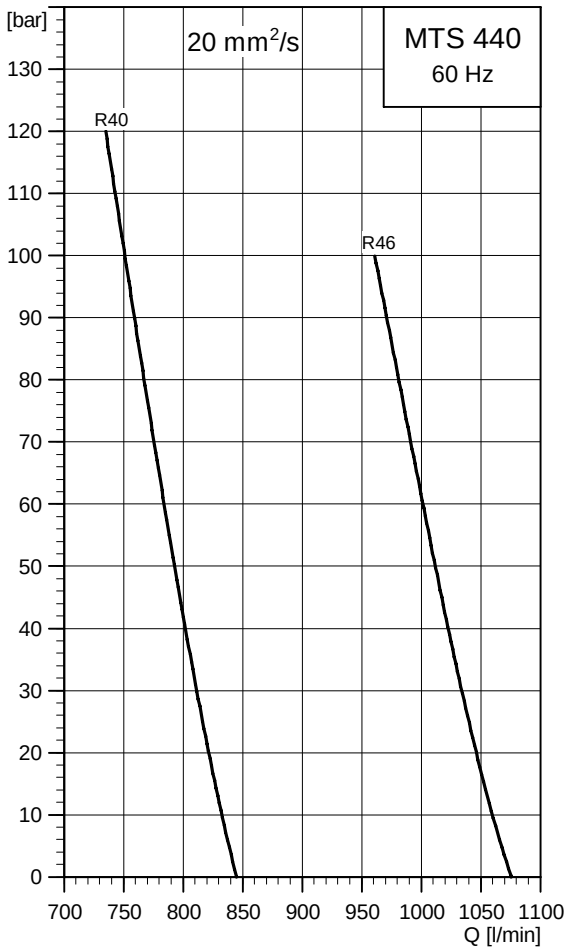

TM04 0031 4807

Performance table

Pressure	1 mm²/s (emulsion)				20 mm²/s (cutting oil with EP additives)			
	R40		R46		R40		R46	
	Q	P	Q	P	Q	P	Q	P
bar	l/min	kW	l/min	kW	l/min	kW	l/min	kW
0	845	5.8	1076	5.8	845	12.1	1076	12.1
10	817	19.9	1039	23.7	832	26.2	1059	30
20	804	33.9	1021	41.6	822	40.3	1046	48
30	793	48	1006	59.6	811	54.4	1034	65.9
40	783	62.1	994	77.5	802	68.5	1023	83.8
50	775	76.2	983	95.4	793	82.5	1012	102
60	767	90.3	973	113	784	96.6	1001	120
70	760	104	964	131	776	111	991	138
80	754	119	955	149	767	125	981	156
90	747	133	946	167	759	139	971	174
100	741	147	938	185	751	153	961	191
110	-	-	-	-	743	167	-	-
120	-	-	-	-	735	181	-	-

Dimensional sketches

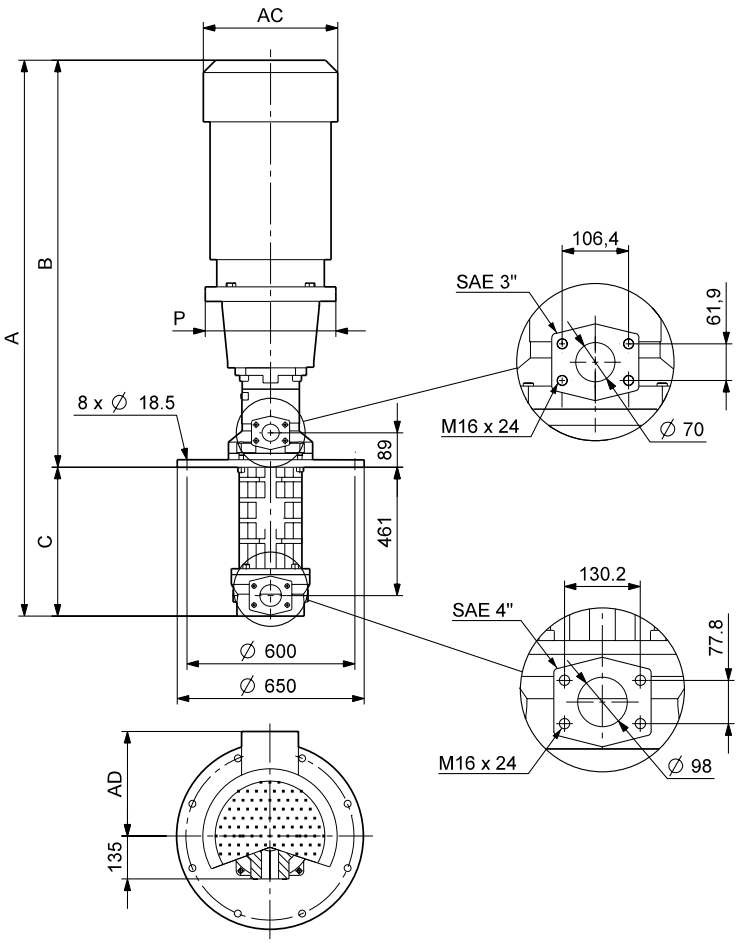

Dimensions and weights

Pump type	P2 [kW]	Dimensions [mm]						Net weight [kg]
		A	B	C	AC	AD	P	
MTS 440-20 R40 D 8.6	45	1792	546	1246	442	325	450	554
MTS 440-30 R40 D 8.6	55	1861	546	1315	495	392	550	647
MTS 440-40 R40 D 8.6	75	1934	546	1388	555	432	550	764
MTS 440-50 R40 D 8.6	90	2044	546	1498	555	432	550	849
MTS 440-60 R40 D 8.6	110	2091	546	1545	610	495	660	1024
MTS 440-80 R40 D 8.6	132	2251	546	1705	610	495	660	1157
MTS 440-100 R40 D 8.6	160	2251	546	1705	610	495	660	1297
MTS 440-20 R46 D 8.6	55	1861	546	1315	495	392	550	647
MTS 440-30 R46 D 8.6	75	1934	546	1388	555	432	550	764
MTS 440-40 R46 D 8.6	90	2044	546	1498	555	432	550	849
MTS 440-50 R46 D 8.6	110	2091	546	1545	610	495	660	1023
MTS 440-60 R46 D 8.6	132	2251	546	1705	610	495	660	1157
MTS 440-80 R46 D 8.6	160	2251	546	1705	610	495	660	1297
MTS 440-100 R46 D 8.6	200	2391	546	1845	610	495	660	1487

NPSH curves for MTS pumps

The performance curves refer to liquids without any air enclosed and show the beginning of aeration. For this reason, a safety margin of 0.5 m must be added to the NPSH value taken from the curve. For liquids with air inclusions (undissolved air), an additional value must be added to the NPSH value derived. When dealing with critical conditions in your plant, always consult Grundfos.

Maximum allowable air content

Emulsion:	10 %
Oil:	7 %.

Spindle 46

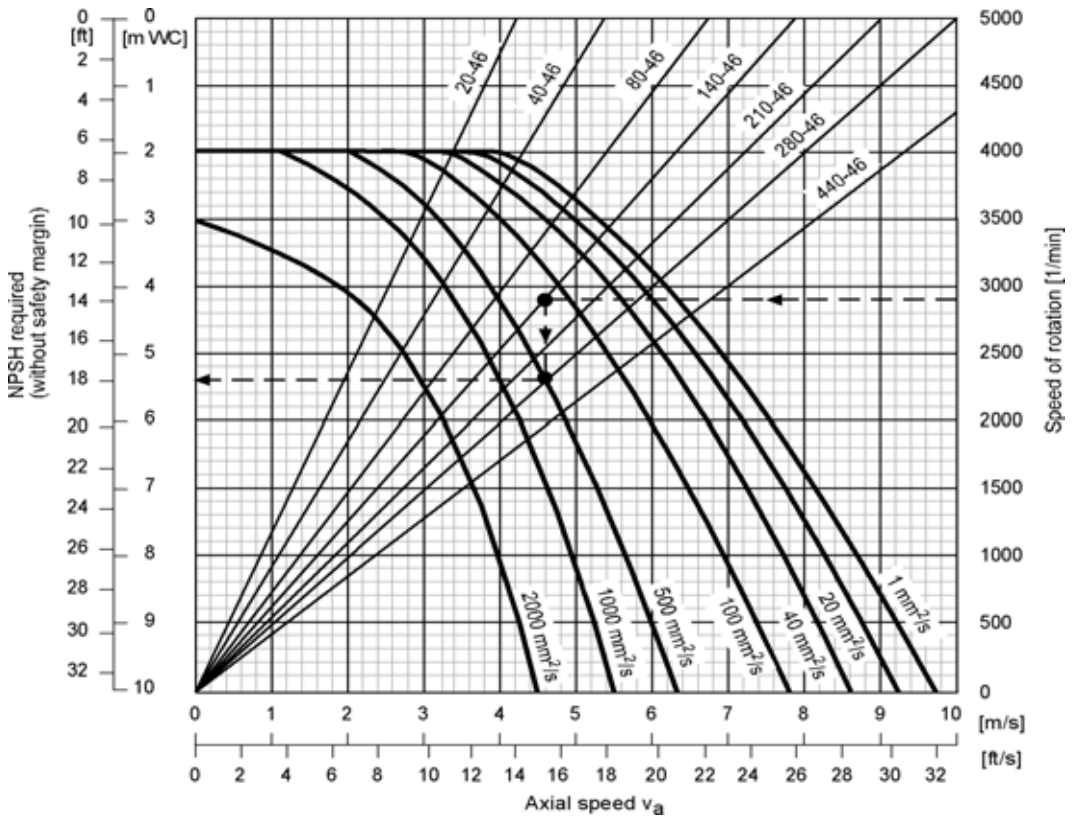

TM0

Example

Given:

Size	140-46
Speed	n = 2900 min^{-1}
Viscosity	ν = 500 mm^2/s

Wanted:

NPSH required.

Solution:

NPSH taken from curve = 5.4 m H
+ safety margin 0.5 m
= 5.9 m H.

NPSH curves

Small spindle 46

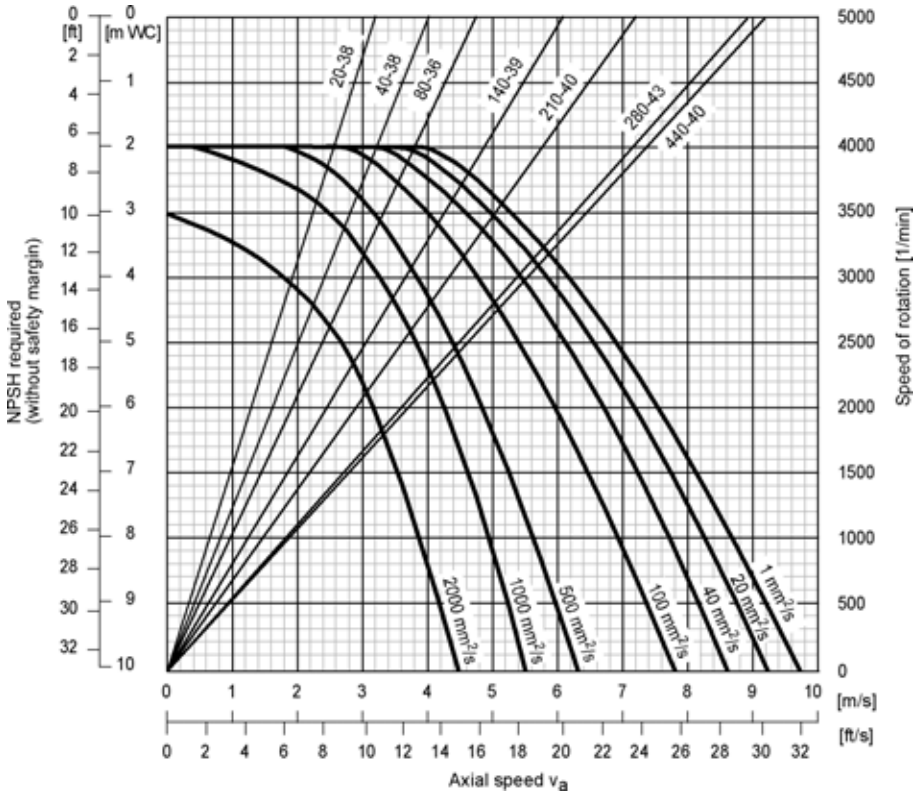

TM0

Spindle 56

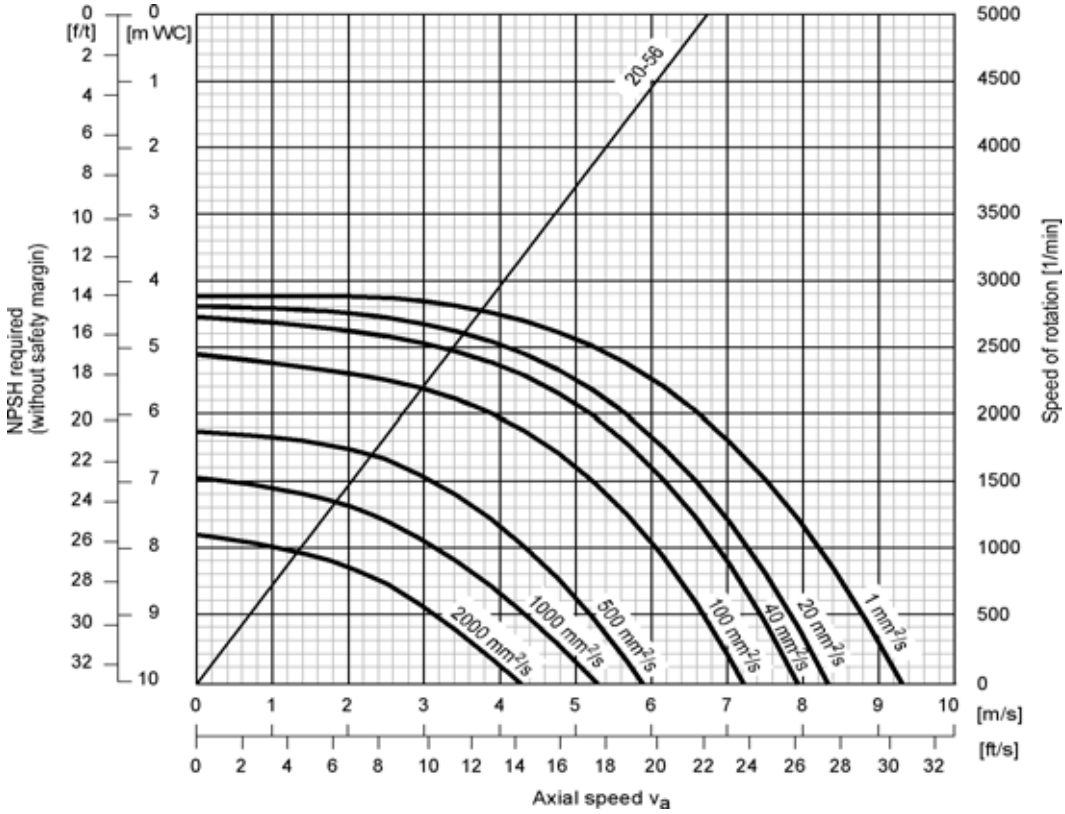

TM04 0188 0808

Pumped liquids

List of pumped liquids

The composition, oil content (ability to provide lubrication) and cooling effect of the liquid determine the pump maintenance intervals and maximum permissible performance data.

Cooling lubricants according to DIN 51 385 are divided into three groups according to water and oil content. Pump also pump cooling lubricants with a very low lubricating effect, but very high cooling performance (“main group”).

Cooling lubricant main group	Subgroup	Effect at the processing spot
L Solutions	Solutions of inorganic materials in water	Higher cooling effect, lower lubricating effect
	Solutions, dispersions of organic (synthetic materials in water)	
E Emulsions	Oil-in-water emulsions (Oil content E 2 % to E 20 %	Cooling-lubricating effect
S Petroleum-based cutting and grinding oils (natural and synthetic)	Cutting oils without additives (pure)	Higher lubricating effect, lower cooling effect
	Cutting oils with polar (physically effective) additives	
	Cutting oils with mild-effect (lubricating film forming) EP additives	Better surface adhesion provides protection against corrosion
	Cutting oils with polar and mild-effect EP additives	
	Cutting oils with active (chemical) EP additives	Higher temperature and pressure resistance
	Cutting oils with polar and active EP additives	

Filtration

To reach an acceptable pump life, we recommend the cooling lubricants be filtrated to following cleanness classes according ISO 4406/99. The recommended cleanness class depends on pumping pressure and abrasive class 1 to 7.
There are process examples for abrasive classes given below the table.

The additional specifications to filter mesh and mass proportion are guide values for orientation. Decisive factor is the cleanness of the liquid indicated by the cleanness class.

To avoid damage by coarse particles, it is advisable to use a filter mesh of 65 µm (nominal, two dimensional) and finer.

	Abrasive class						
	1	**2**	**3**	**4**	**5**	**6**	**7**
material	steel, GG, Al	steel, GG, Al	Al (Si > 5%)	steel	steel, hard.	hard metal	titanium
process	drilling	turning/milling	turning/milling	grinding	grinding	grinding	grinding
tool	HSS	hard metal	hard metal	corundum	corundum	CBN	diamond
Pressure stage							
≤ 120 bar	**21/19/16** ≤ 30 µm ≤ 30 mg/l	**21/19/16** ≤ 25 µm ≤ 25 mg/l	**21/19/16** ≤ 20 µm ≤ 20 mg/l	**20/18/15** ≤ 17 µm ≤ 15 µm	**20/18/15** ≤ 15 µm ≤ 10 mg/l	**19/17/14** ≤ 10 µm ≤ 5 mg/l	**18/16/13** ≤ 6 µm ≤ 3 mg/l
≤ 90 bar	**22/20/17** ≤ 50 µm ≤ 60 mg/l	**22/20/17** ≤ 45 µm ≤ 50 mg/l	**22/20/17** ≤ 40 µm ≤ 40 mg/l	**21/19/16** ≤ 30 µm ≤ 30 µm	**21/19/16** ≤ 20 µm ≤ 20 mg/l	**20/18/15** ≤ 15 µm ≤ 10 mg/l	**19/17/14** ≤ 10 µm ≤ 5 mg/l
≤ 60 bar	**23/21/18** ≤ 80 µm ≤ 120 mg/l	**23/21/18** ≤ 75 µm ≤ 100 mg/l	**23/21/18** ≤ 60 µm ≤ 80 mg/l	**22/20/17** ≤ 50 µm ≤ 60 µm	**22/20/17** ≤ 40 µm ≤ 40 mg/l	**21/19/16** ≤ 20 µm ≤ 20 mg/l	**20/18/15** ≤ 15 µm ≤ 10 mg/l
≤ 30 bar	**24/22/19** ≤ 150 µm ≤ 250 mg/l	**24/22/19** ≤ 120 µm ≤ 200 mg/l	**24/22/19** ≤ 100 µm ≤ 160 mg/l	**23/21/18** ≤ 80 µm ≤ 120 µm	**23/21/18** ≤ 60 µm ≤ 80 mg/l	**22/20/17** ≤ 40 µm ≤ 40 mg/l	**21/19/16** ≤ 20 µm ≤ 20 mg/l

Mains-operated motors for MTS, 50 Hz

Motor P_2 [kW]	Frame size	Efficiency class	Standard voltage [V]	$I_{1/1}$ [A]	Cos $\varphi_{1/1}$	η [%]	$\frac{I_{start}}{I_{1/1}}$ [%]
3.0	100	2	380-415Δ	6.35	0.87-0.80	85	880-800
4.0	112	2		8.00	0.90-0.87	86	950-870
5.5	132	2		11.0	0.89-0.86	87.5	970-890
7.5	132	1	3x380-415Δ/ 660-690Y	14.8-13.6/ 8.5-8.1	0.89-0.88	89.5-90.5	780-910
11	160	1		21.2-19.6/ 12.2-11.6	0.90-0.88	90.7-91.7	660-780
15	160M	1		28.5-26-0/ 16.2-15.6	0.91-0.90	91.2-92.3	660-780
18.5	160L	1		35.0-32.0/ 20.0-19.2	0.91-0.90	91.6-92.6	710-850
22	180M	1		41.5-38.5/ 23.8-22.8	0.91-0.89	91.9-92.8	750-890

MG

TM03 1711 2805

Motor P_2 [kW]	Frame size	Efficiency class	Standard voltage [V]	$I_{1/1}$ [A]	Cos $\varphi_{1/1}$	η [%]	$\frac{I_{start}}{I_{1/1}}$ [%]
30	200L	1	3x380-415Δ/ 660-690Y	52.0/30.0	0.89	93.5	700
37	200L	1		64.0/37.0	0.89	94.0	700
45	225M	1		77.0/44.5	0.89	94.9	730
55	250M	1		93.0/53.7	0.90	95.3	680
75	280S	1		128/73.9	0.89	95.2	700
90	280M	1		150/86.6	0.90	95.6	760
110	315S	-		182/105	0.91	95.8	690
132	315M	-		220/127	0.91	96.0	710
160	315L	-		260/150	0.92	96.4	710
200	315L	-		320/185	0.93	96.5	690

Siemens

TM03 1710 2805

Mains-operated motors for MTS, 60 Hz

Motor P_2 [kW]	Frame size	Efficiency class	Standard voltage [V]	$I_{1/1}$ [A]	Cos $\varphi_{1/1}$	η [%]	$\frac{I_{start}}{I_{1/1}}$ [%]
3.0	100	2	380-480Δ	6.25-5.45	0.90-0.79	83-85	1100-750
4.0	112	2		7.85-6.60	0.92-0.85	86-87	1200-800
5.5	132	2		10.8-9.00	0.92-0.85	86.5-88.5	1240-820
7.5	132	1		14.4-12.0/ 8.3-8.1	0.91-0.85	90.0-91.5	680-1050
11	160	1		21.2-17.2/ 12.2-11.6	0.91-0.87	90.0-92.5	580-890
15	160M	1	3x380-480Δ/ 660-690Y	29.0-22.8/ 16.6-15.8	0.92-0.89	90.0-92.5	580-890
18.5	160L	1		35.0-28.0/ 20.2-19.2	0.92-0.89	90.5-93.0	610-970
22	180M	1		42.0-33.5/ 24.2-22.8	0.92-0.89	90.0-92.5	650-1040

MG

TM03 1711 2805

Motor P_2 [kW]	Frame size	Efficiency class	Standard voltage [V]	$I_{1/1}$ [A]	Cos $\varphi_{1/1}$	η [%]	$\frac{I_{start}}{I_{1/1}}$ [%]
15	160M	1	3x380-480Δ/ 660-690Y	27.0-22.0/ 15.6-14.8	0.94-0.89	89.9-91.2	680-1080
18.5	160L	1		32.5-26.5/ 18.8-18.0	0.94-0.91	91-92.3	650-1040
22	180M	1		40.0-32.5/ 23.0-22.0	0.92-0.88	91.5-92.4	670-1050
30	200L	1		54.0-44.0/ 31.0-29.5	0.91-0.88	92.6-93.6	670-1060
37	200L	1		66.0-54.0/ 38.0-36.0	0.91-0.88	93.5-94.2	660-1050
45	225M	1		81.0-65.0/ 46.5-44.0	0.90-0.87	94.3-95.1	570-900
55	250M	1		97.0-79.0/ 56.0-53.0	0.91-0.88	94.6-95.2	540-830
75	280S	1		134-108/ 77.0-73.0	0.90-0.87	94.8-95.3	550-860
90	280M	1		160-128/ 92.0-87.0	0.90-0.89	95.2-95.6	590-930
110	315S	-		194-154/ 112-106	0.91-0.90	95.2-95.6	540-850
132	315M	-		230-184/ 134-126	0.91-0.90	95.3-95.9	560-890
160	315L	-		275-220/ 158-152	0.92-0.90	95.8-96.2	550-900
200	315L	-		345-270/ 198-188	0.92-0.92	95.6-96.1	470-760

Siemens

TM03 1710 2805

Counter flanges for discharge port

A set consists of one counter flange one O-ring, bolts and lock washers

SAE flange		Pump type	SAE size	Description	Rated pressure	Pipework connection	Product number
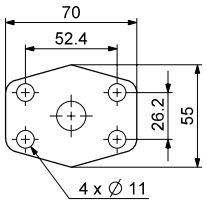	TM04 1963 1508	MTS 20 MTS 40	1”	Threaded For welding	345 bar 160 bar	G1 25 mm, nominal	96397165 96397171
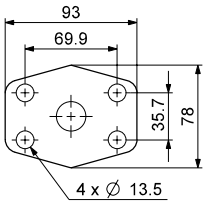	TM04 1964 1508	MTS 80 MTS 140	1 1/2”	Threaded For welding	207 bar 160 bar	G1 1/2 38 mm, nominal	96397166 96397172
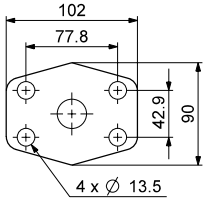	TM04 1965 1508	MTS 210	2”	Threaded For welding	207 bar 160 bar	G2 49 mm, nominal	96397167 96397173
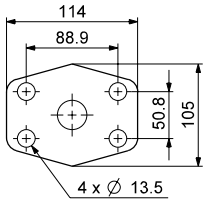	TM04 1966 1508	MTS 280	2 1/2”	Threaded For welding	172 bar 160 bar	G2 1/2 62 mm, nominal	96397168 96397174
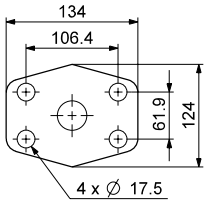	TM04 1967 1508	MTS 440	3”	Threaded For welding	138 bar 160 bar	G3 62 mm, nominal	96397169 96397175

Accessories

Counter flanges for suction port (only D8.6)

A set consists of one counter flange one O-ring, bolts and lock washers

SAE flange		Pump type	SAE size	Description	Rated pressure	Pipework connection	Product number
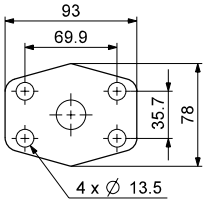	TM04 1964 1508	MTS 20 MTS 40	1 1/2”	Threaded For welding	207 bar 160 bar	G1 1/2 38 mm, nominal	96397166 96397176
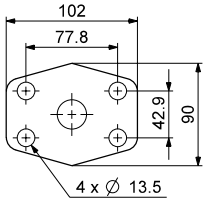	TM04 1965 1508	MTS 80 MTS 140	2”	Threaded For welding	207 bar 160 bar	G2 49 mm, nominal	96397167 96397177
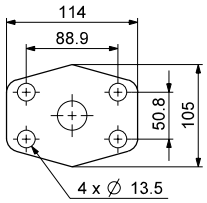	TM04 1966 1508	MTS 210	2 1/2”	Threaded For welding	172 bar 160 bar	G2 1/2 62 mm, nominal	96397168 96397178
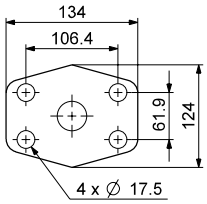	TM04 1967 1508	MTS 280	3”	Threaded For welding	138 bar 160 bar	G3 74 mm, nominal	96397169 96397179
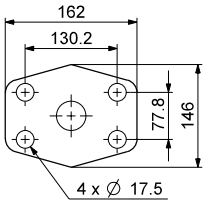	TM04 1968 1508	MTS 440	4”	Threaded For welding	345 bar 160 bar	G4 102 mm, nominal	96397170 96397180

Accessories

Variants

MTS pumps come in three variants for three types of installation. See the next three sections and section *Installation*.

Tank-top installation

The pump is equipped with a bracket, and the discarge port is above the tank cover. This type of installation is especially easy and economical.

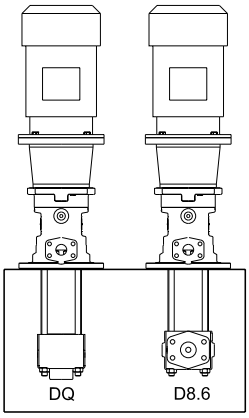

TM04 4565 1609

Fig. 1 Tank-top installation

In-tank installation

The pump is equipped with a bracket. This type of installation saves space, maintenance compared with the dry installation. Any leakage remains in the tank.

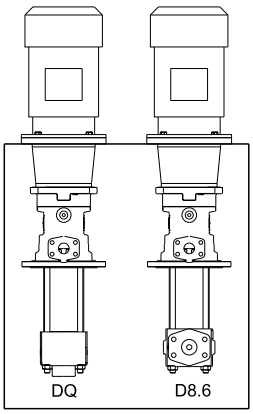

TM04 4566 1609

Fig. 2 In-tank installation

Dry installation

The pump is equipped with a bracket and mounting foot. This type of installation is well-suited for operation with inlet pressure and easily accessible for maintenance. A silicon carbide mechanical shaft seal ensures a long service life.

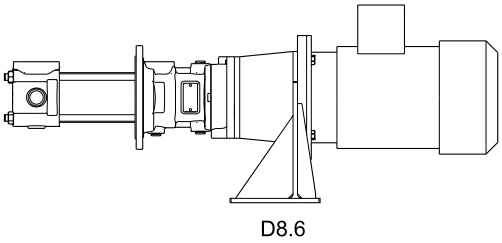

TM04 4567 1609

Fig. 3 Dry installation