Pioneering for You

Wilo-Atmos GIGA-I/-D/-B

带集装式机械轴封 • With cartridge mechanical seal

zh-CHS 安装及操作说明

en Installation and operating instructions

2231993 • Ed.01/2023-08

Fig. I

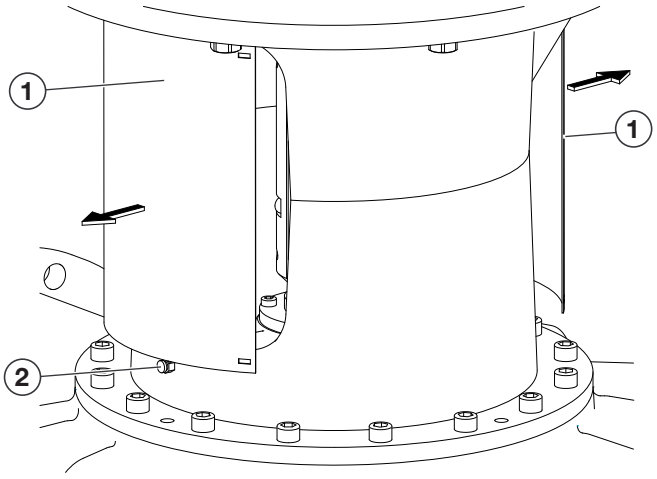

Fig. II

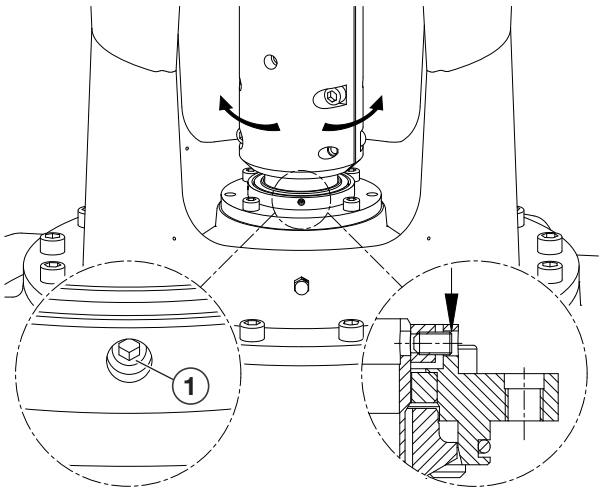

Fig. III

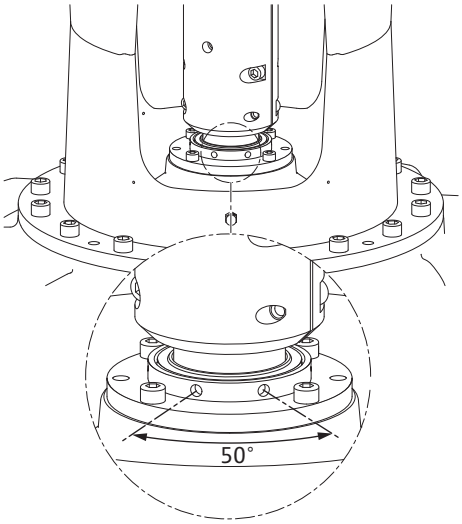

Fig. IV

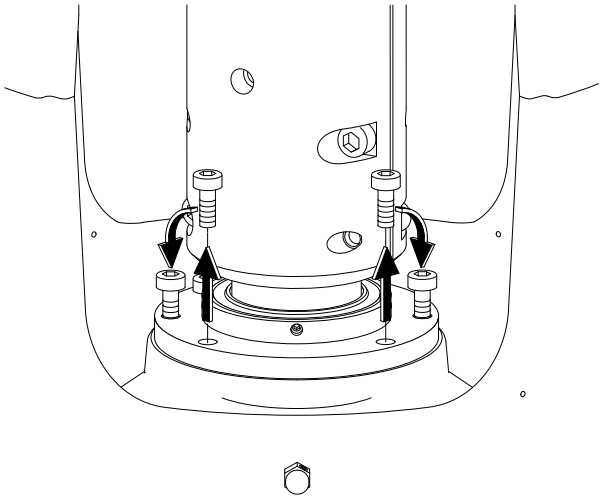

Fig. V

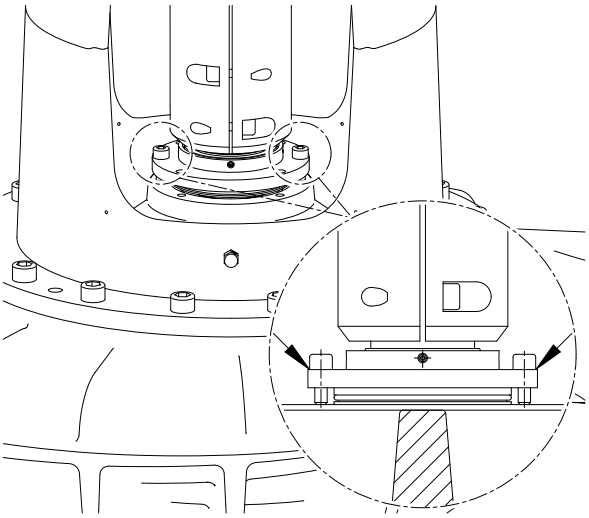

Fig. VI

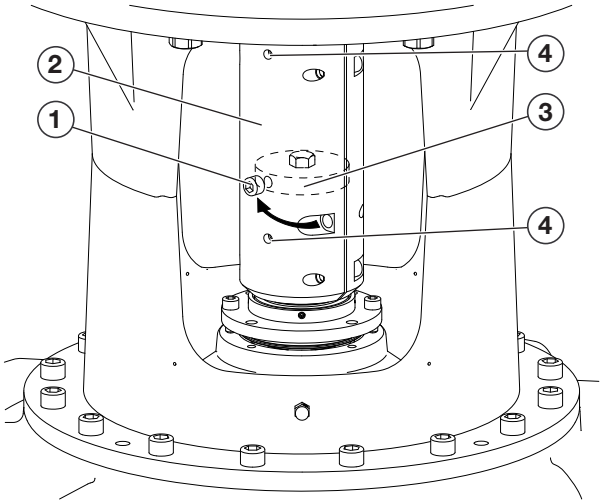

Fig. VII

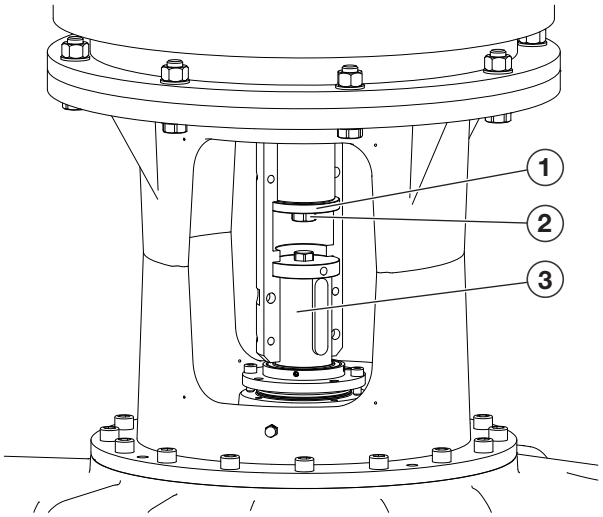

Fig. VIII

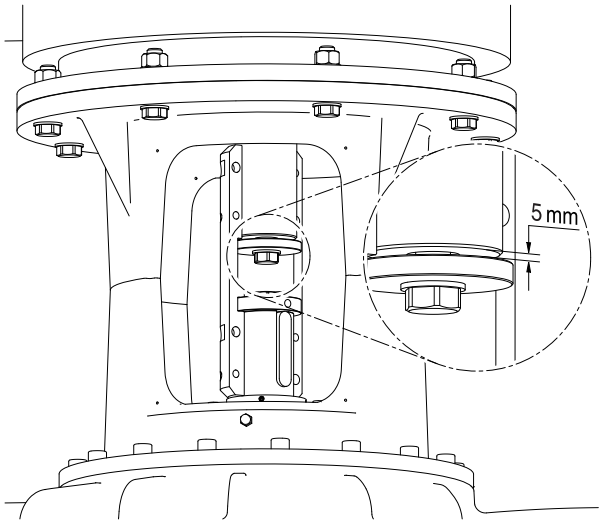

Fig. IX

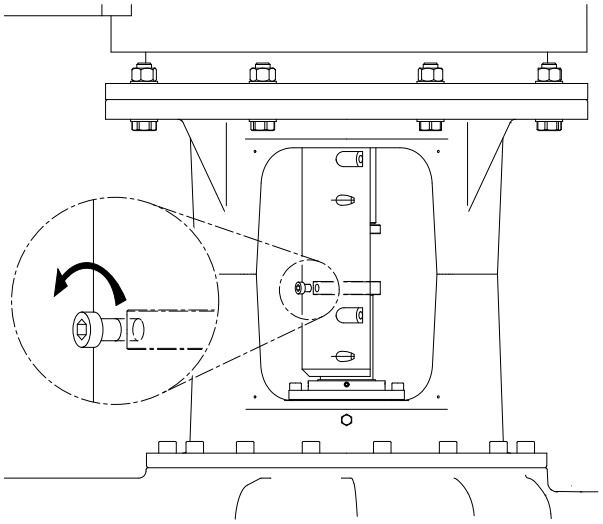

Fig. X

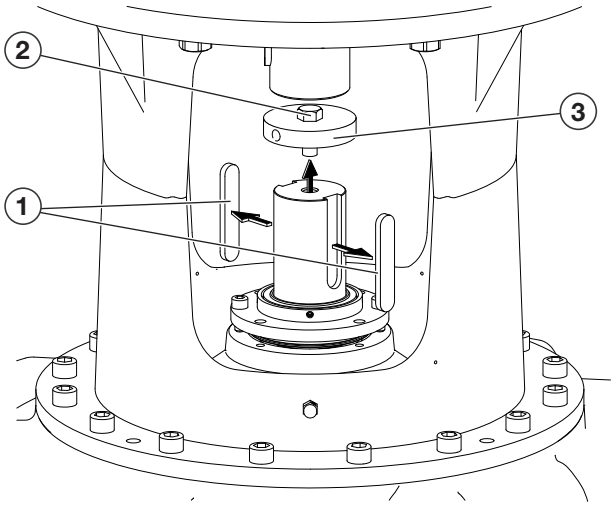

Fig. XI

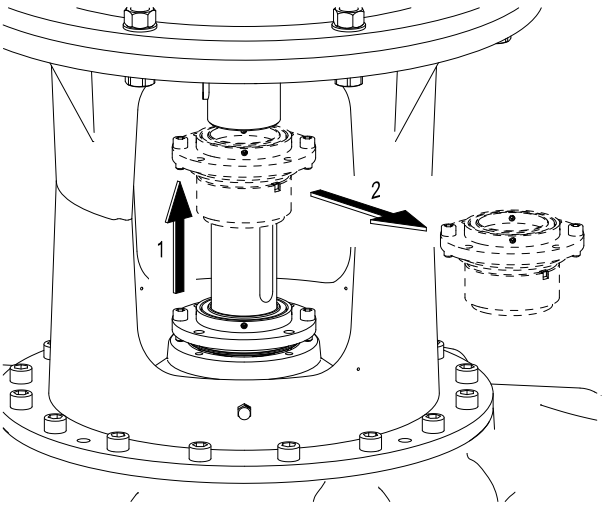

Fig. XII

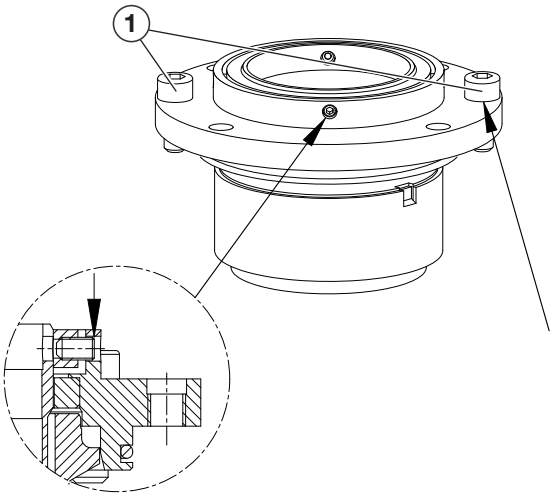

Fig. XIII

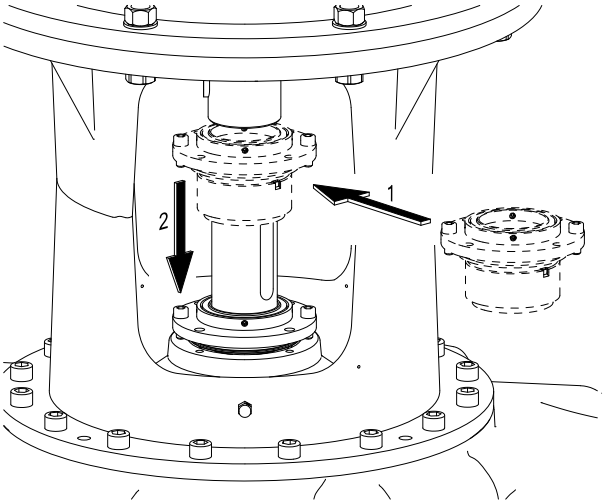

Fig. XIV

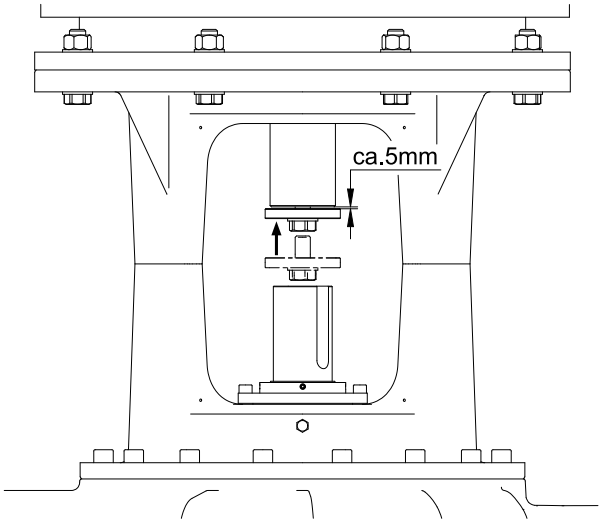

Fig. XV

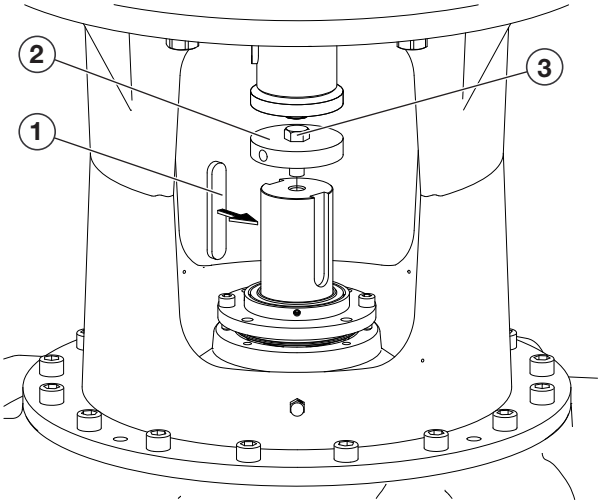

Fig. XVI

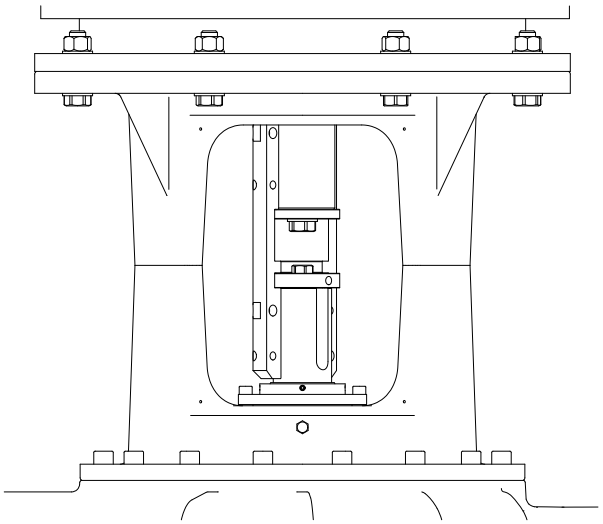

Fig. XVII

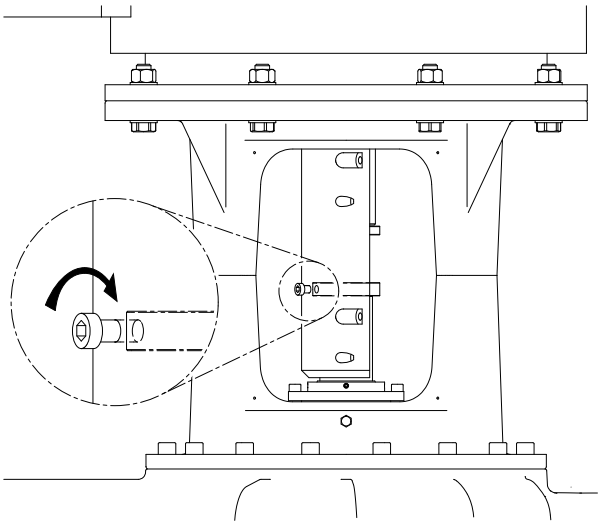

Fig. XVIII

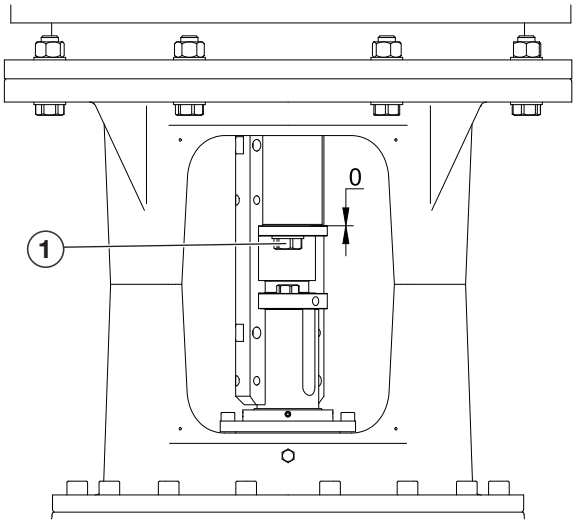

Fig. XIX

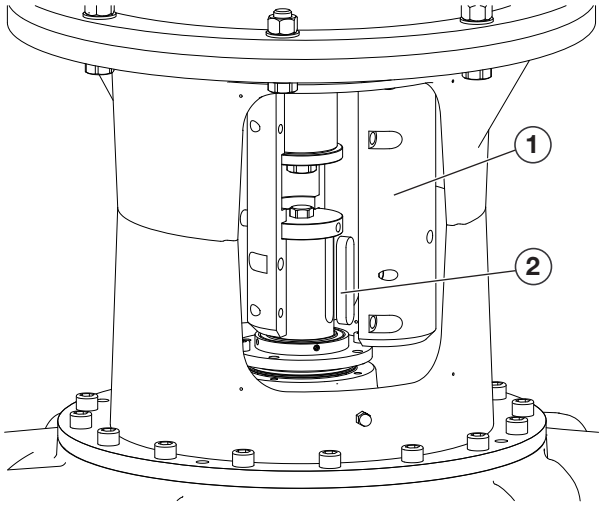

Fig. XX

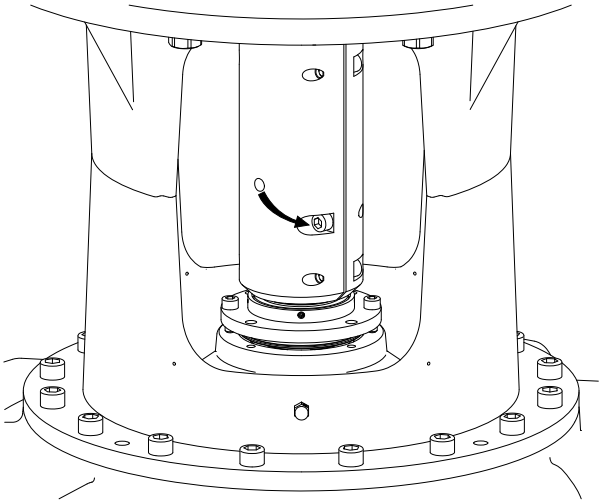

Fig. XXI

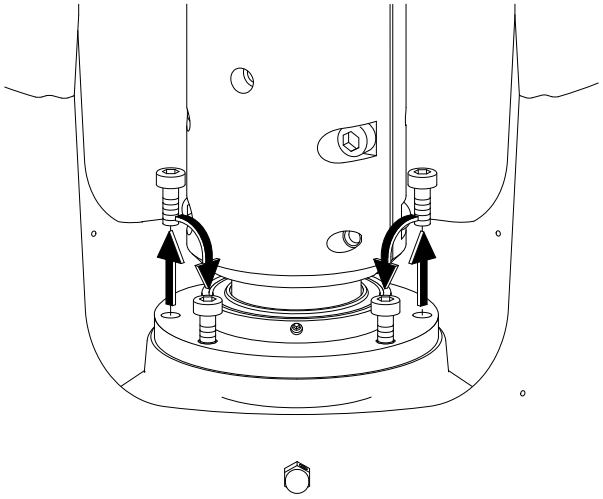

Fig. XXII

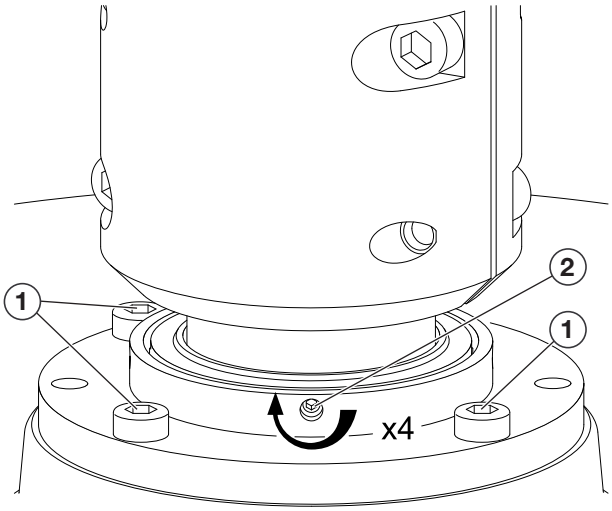

Fig. XXIII

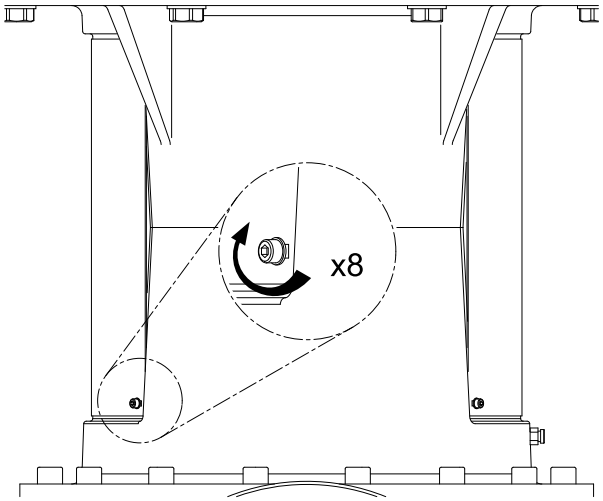

Fig. XXIV

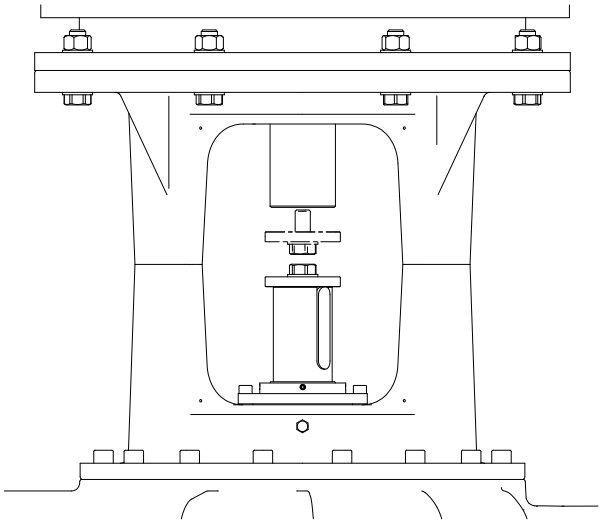

Fig. XXV

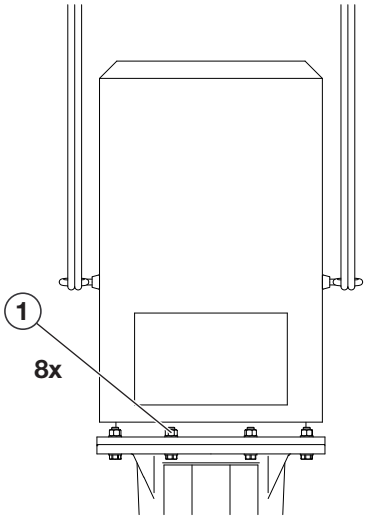

Fig. XXVI

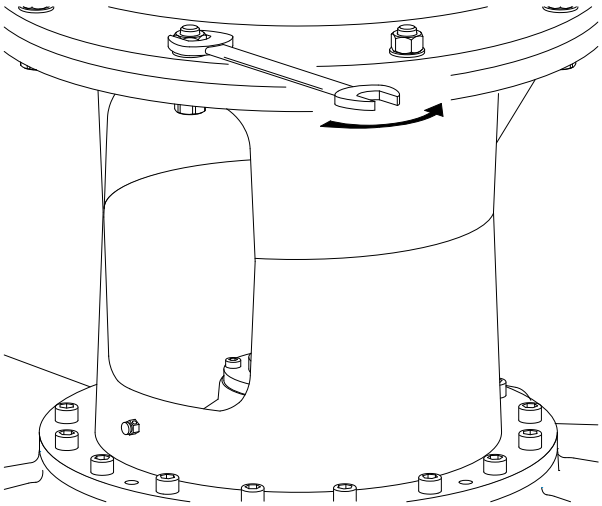

Fig. XXVII

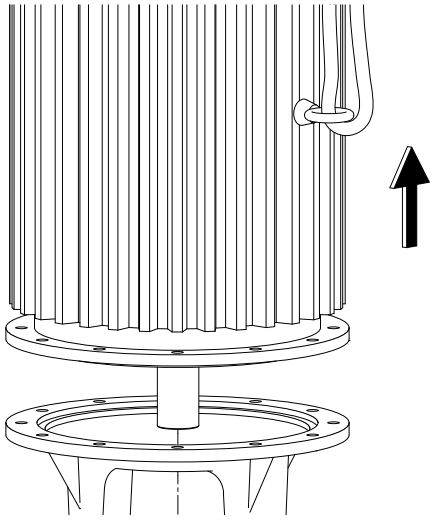

Fig. XXVIII

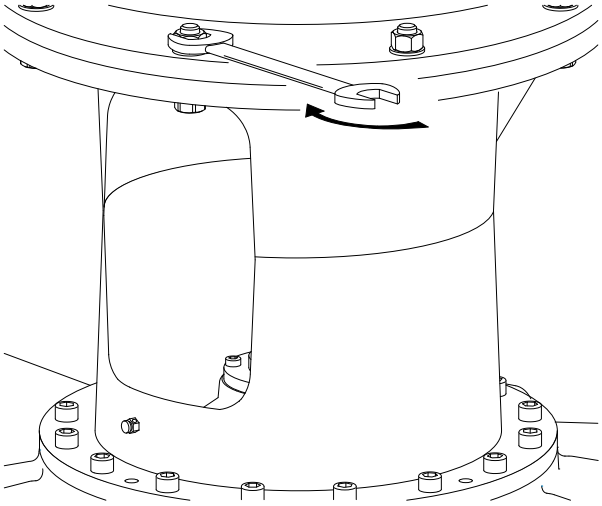

Fig. XXIX: Atmos GIGA-I Cartridge

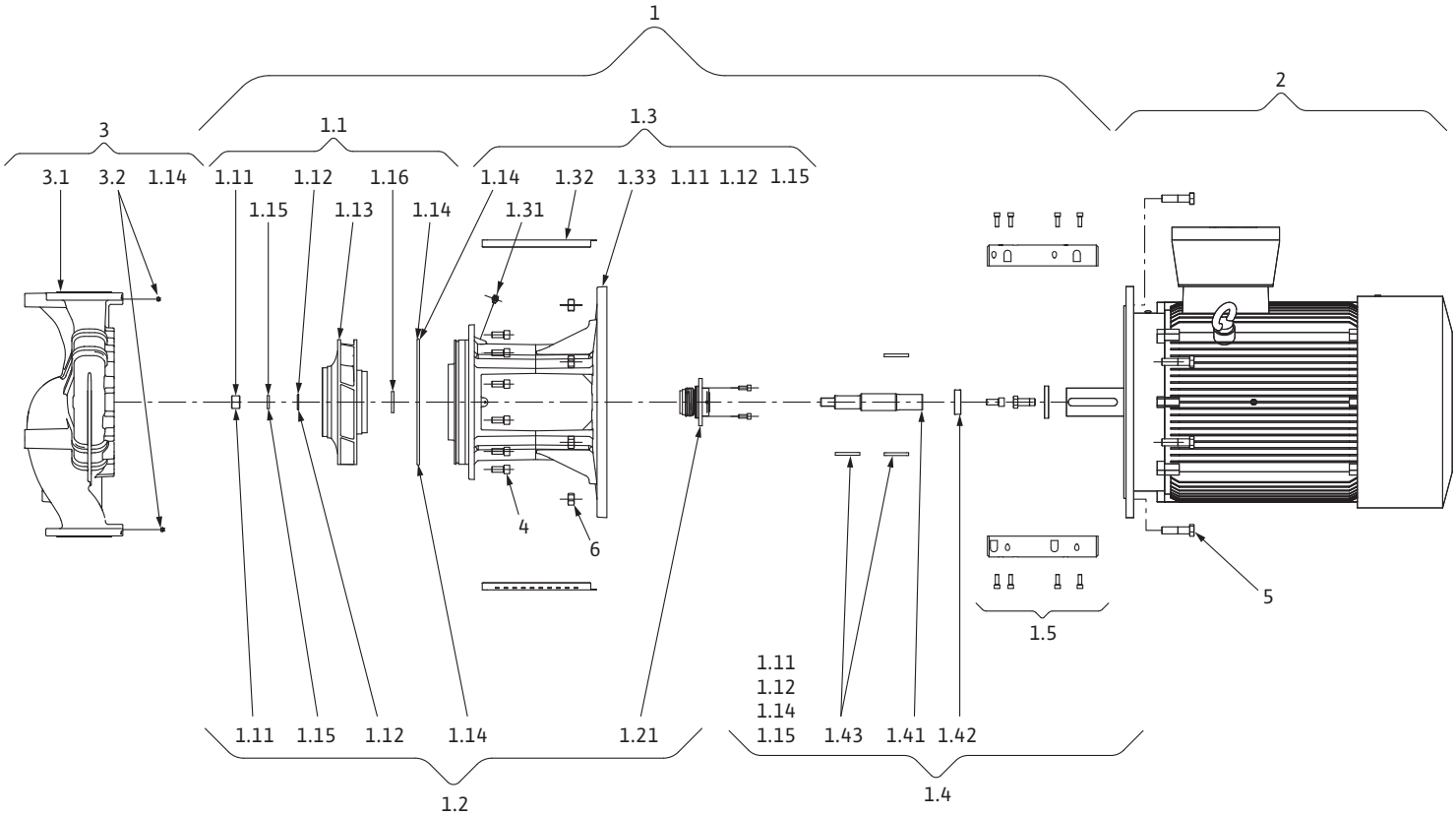

Fig. XXX: Atmos GIGA-B Cartridge

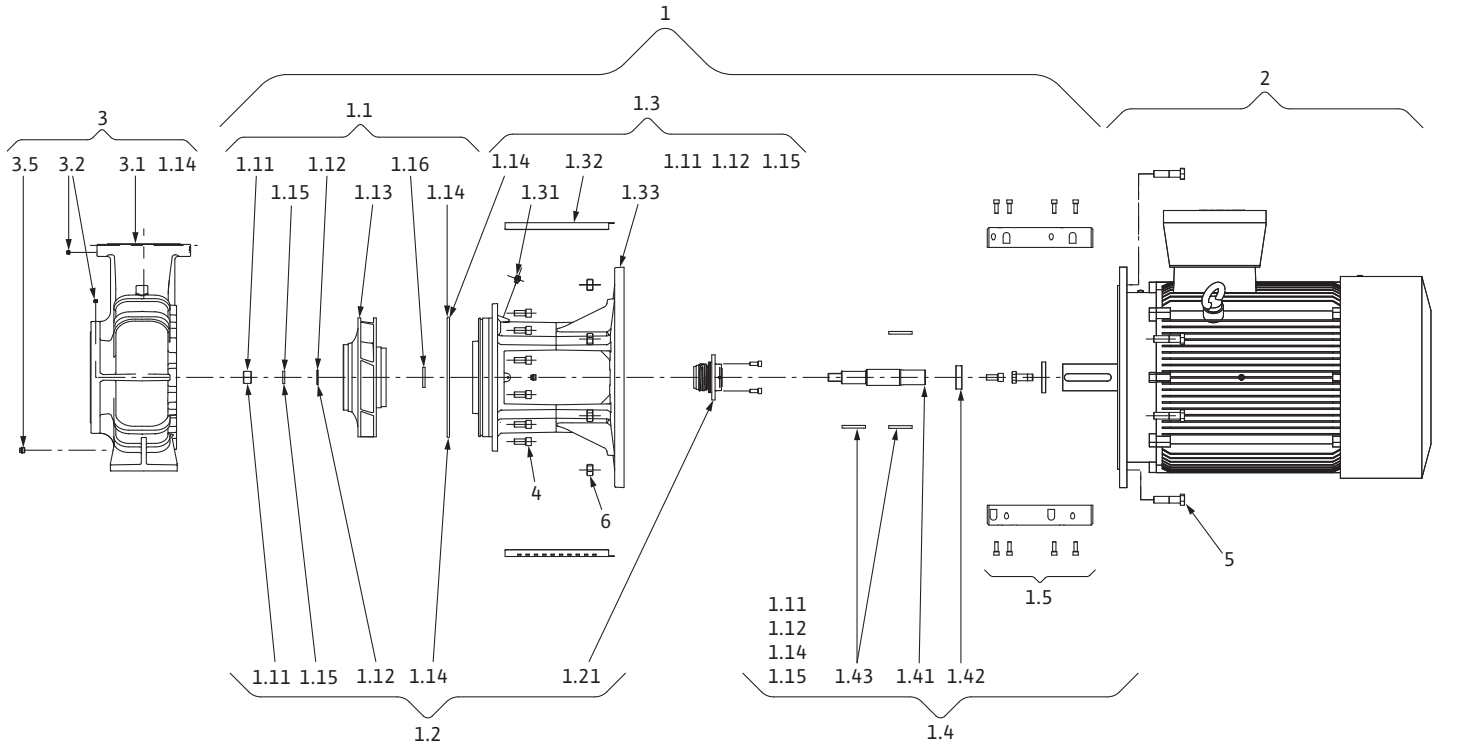

Fig. XXXI: Atmos GIGA–I 250

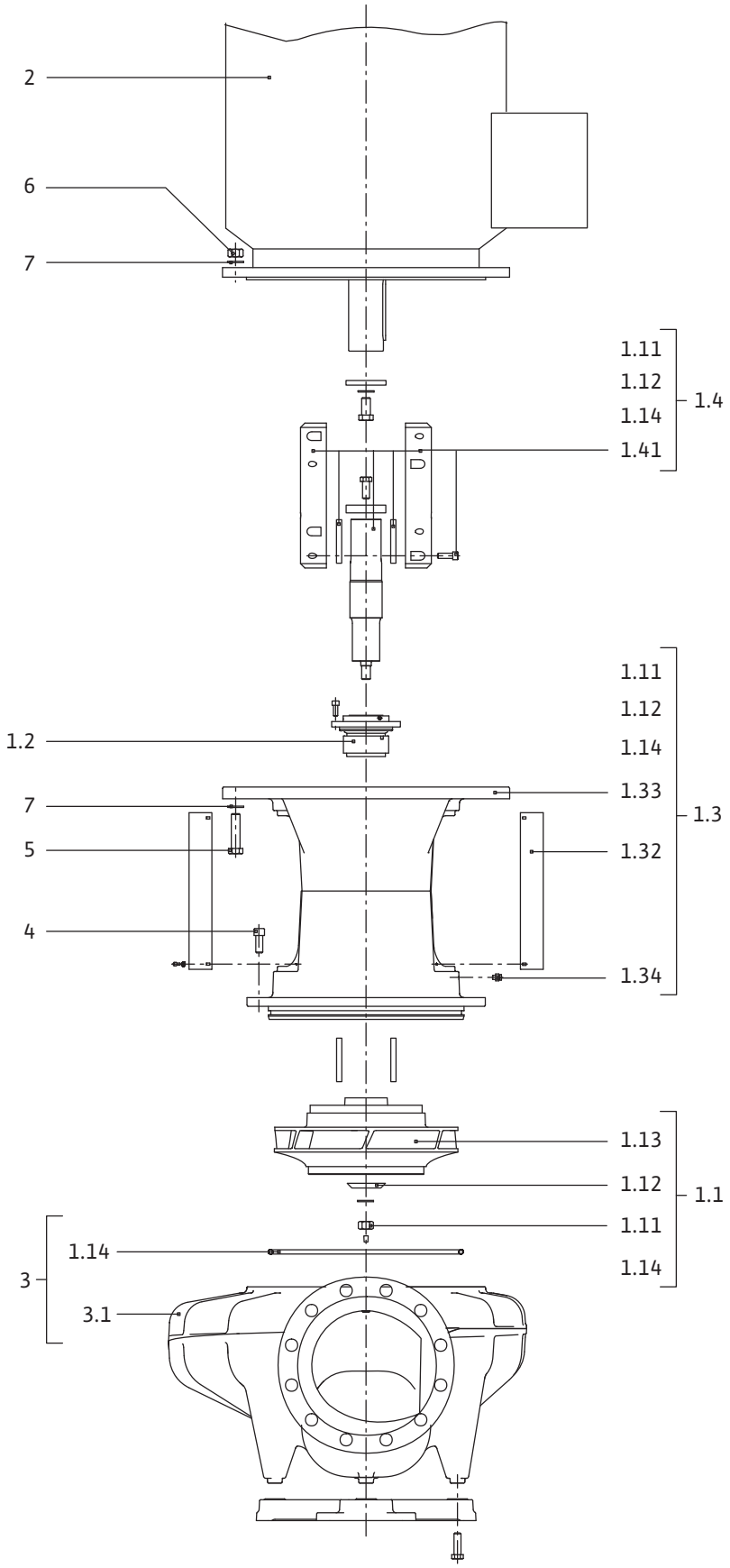

Fig. XXXII: Atmos GIGA-D Cartridge

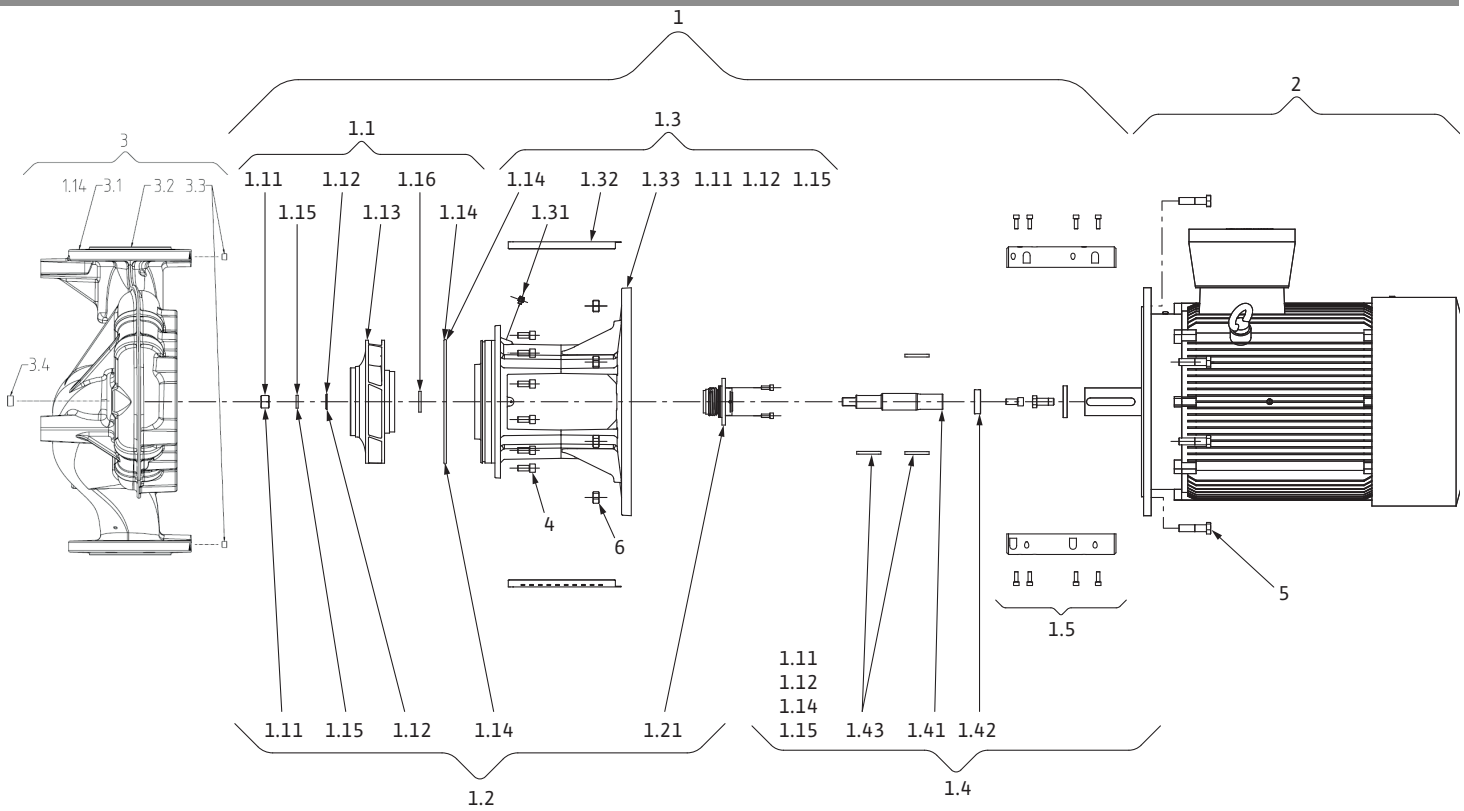

Fig. XXXIII: DN 150 / DN 200

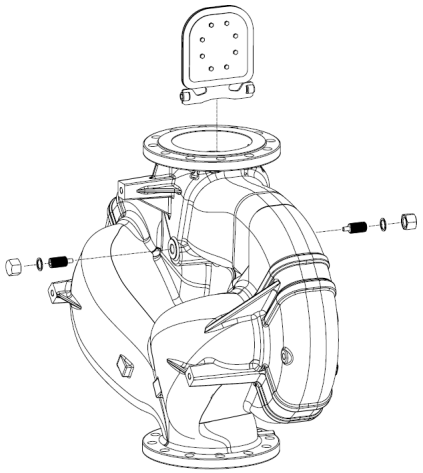

Chinese **12**

English **41**

目录

1 概述 13
1.1 关于本说明书 13
1.2 版权 13
1.3 保留更改权力 13

2 安全 13
2.1 安全说明的标识 13
2.2 工作人员资格鉴定 14
2.3 电气作业 14
2.4 运输 14
2.5 安装/拆卸工作 15
2.6 运行期间 15
2.7 保养工作 15
2.8 运营者的责任 16

3 运输和存放 16
3.1 发货 16
3.2 运输检验 16
3.3 存放 16
3.4 为了安装/拆卸目的运输 17

4 规定用途和滥用 18
4.1 规定用途 18
4.2 滥用 18

5 产品相关数据 19
5.1 型号代码 19
5.2 技术数据 19
5.3 供货范围 20
5.4 附件 21

6 水泵说明 21
6.1 预期噪声水平 21

7 安装 22
7.1 工作人员资格鉴定 22
7.2 运营者的责任 22
7.3 安全 22
7.4 水泵法兰处允许的力和扭矩 23
7.5 准备安装 25

8 电气连接 28
8.1 停机加热装置 30

9 试运行 30
9.1 预调试 31
9.2 填充和排气 31
9.3 开启 32
9.4 关闭 32
9.5 运行 32

10 保养 33
10.1 供风装置 34
10.2 维护工作 34

11 故障、原因、排除方法 37

12 备件 38

13 废弃处置 39
13.1 油和润滑剂 40
13.2 关于收集损耗的电气产品和电子产品的相关信息 40

1 概述

1.1 关于本说明书

本安装及操作说明书是产品的固定组成部分。开始操作之前，请先阅读说明书并将其妥善保存在方便易取之处。严格遵守说明书中列出的要求和操作步骤，是按规定使用及正确操作产品的前提条件。
注意遵守产品上标注的所有参数和标识。排印时，安装及操作说明书符合装置的规格和基本安全技术规程及标准的最新版本。

原版操作说明书以德语撰写。所有其他语种的说明书均为其翻译件。

1.2 版权

WILO SE © 2023

除非明确允许，否则禁止转发和复制本文档，以及使用和传播其内容。若出现违规行为，则有义务支付损失赔偿。保留所有权利。

1.3 保留更改权力

Wilo保留更改所述数据的权利，恕不另行通知，对于技术性描述不准确和/或遗漏不承担任何责任。说明书中使用的图片可能与实际设备存在偏差，仅用于举例介绍产品。

2 安全

本章节主要介绍产品各寿命阶段适用的基础提示信息。不遵守提示会导致下列危险：

- 电气、机械和细菌作用以及电磁场危害人身安全
- 有害物质泄漏会污染环境
- 物资损失
- 产品重要功能失灵
- 规定的保养和维修方法无效

不遵守提示信息会导致丧失索赔权利。

此外也应遵守其他章节列出的各项指导说明和安全说明！

2.1 安全说明的标识

本安装及操作说明针对物资损失和人身安全问题列举了多项安全说明，其表现形式各有不同：

- 涉及到人身安全问题的安全说明以一个信号词作为开端，而且配套使用相应的**符号**。
- 涉及到物资损失问题的安全说明也以一个信号词作为开端，但是**没有**符号。

信号词

- **危险！**
  如不注意，会导致死亡或重伤！
- **警告！**
  如不注意，可能导致人员受（重）伤！
- **小心！**
  如不遵守，可能造成物资损失，甚至导致全损。
- **提示！**
  操作产品时有用的注意事项

图标

在本说明书中使用以下图标：

一般性危险图标

电击危险

高温表面警告

高压警告

提示

2.2 工作人员资格鉴定

工作人员必须：

- 了解当地现行的事故预防条例。
- 已阅读安装及操作说明书并且理解其中内容。

工作人员必须具备下列资质：

- 电气作业：电气作业必须由专业电工执行。
- 安装/拆卸工作：必须由专业人员执行，而且要求该人员接受过相关培训，了解工作中会用到的工具以及固定材料。
- 操作人员必须了解整台设备的工作原理。
- 保养工作：必须由熟悉所使用工作介质及其废弃处置的专业人员执行。

“专业电工”定义

所谓“专业电工”，是指接受过相关培训，具备所需知识和经验，能够发现并且规避电力危险的人员。

运营者必须确保相关人员的责任范围、职责并对其进行监督。如果操作人员不具备必要的知识，则必须接受培训和指导。如果有必要，运营者可以委托产品的生产商进行培训和指导。

2.3 电气作业

- 电气作业由专业电工负责执行。
- 接入本地电网时，遵守所在国颁布的现行指令、标准和法规，以及当地能源供应公司的相关规定。
- 在对产品开始任何作业之前，都应先将其断电并采取措施防止重新接通。
- 告知相关人员电气连接方式和如何关闭产品。
- 使用漏电断路器 (RCD) 保证电气连接的安全性。
- 遵守本安装及操作说明以及铭牌上给出的技术参数。
- 将产品接地。
- 将产品连接到电气开关设备时，注意遵守生产商的规定。
- 接线电缆一旦损坏，必须立刻安排专业电工进行更换。
- 切勿取下操作元件。
- 如果使用启动控制器（比如软启动或变频器等），注意遵守电磁兼容性规定。如果需要，考虑采取专业措施（屏蔽电缆、滤波器等）。

2.4 运输

- 佩戴防护装备：
  - 安全手套，用以预防切割伤害
  - 安全鞋
  - 封闭式护目镜
  - 安全头盔（使用提升设备的情况下）
- 只使用合法且获得认证的提升装置。
- 根据实际情况（天气、吊装孔、负载等）选择提升装置。

- 始终将提升装置固定到指定的吊装孔（如吊孔）上。
- 放置提升设备，确保使用过程中的稳定性。
- 使用提升设备时，如果需要（比如视线受阻），必须安排另外一位工作人员负责协调。
- 切勿在悬挂物下停留。悬挂物**切勿**从有人员停留的工作位置上方经过。

2.5 安装/拆卸工作

- 佩戴防护装备：
  - 安全鞋
  - 安全手套，用以预防切割伤害
  - 安全头盔（使用提升设备的情况下）
- 遵从当地有关作业安全和事故防范措施的现行法律法规。
- 遵守安装及操作说明书中所描述的关闭产品/设备的步骤。
- 将产品断电并采取安全措施防止意外接通。
- 所有旋转零部件均须保持静止。
- 关闭入口和压力管路中的截止阀。
- 在封闭的空间内需提供足够的通风条件。
- 进行所有焊接作业或使用电气装置工作时，确保不存在爆炸风险。

2.6 运行期间

- 一旦发生故障或者出现异常，操作人员必须立即报告主管。
- 一旦出现危及人身安全的缺陷，操作人员必须立刻关闭设备：
  - 安全和监控设备故障
  - 外壳部件损坏
  - 电气装置损坏
- 一旦发生流体和工作介质泄露事故，立即收集泄漏物并按照当地现行法规进行废弃处理。
- 只能将工具和其他物体保管在指定位置。

2.7 保养工作

- 佩戴防护装备：
  - 封闭式护目镜
  - 安全鞋
  - 安全手套，用以预防切割伤害
- 遵从当地有关作业安全和事故防范措施的现行法律法规。
- 遵守安装及操作说明书中所描述的关闭产品/设备的步骤。
- 只执行本安装及操作说明书中列出的保养工作。
- 进行维护和维修时，只能使用生产商提供的原装部件。由于使用非原装部件而造成的任何损失，生产商概不承担任何责任。
- 将产品断电并采取安全措施防止意外接通。
- 所有旋转零部件均须保持静止。
- 关闭入口和压力管路中的截止阀。
- 一旦发生流体和工作介质泄露事故，立即收集泄漏物并按照当地现行法规进行废弃处理。

- 将工具保管在指定位置。
- 工作结束后，重新安装所有安全和监控设备，并检查其功能是否正确。

2.8 运营者的责任

- 为工作人员提供以其母语写成的安装及操作说明。
- 为工作人员提供必要的培训，确保其能胜任指派的工作。
- 确保工作人员的责任范围和职责。
- 提供必要的防护装备并保证工作人员佩戴防护装备。
- 使产品上安装的安全和信息标志牌长期保持清晰可读状态。
- 使工作人员了解设备的功能原理。
- 排除触电危险。
- 为危险部件（极冷、极热、旋转等）配备安装方提供的防护装置。
- 如果危险（例如易爆、有毒、灼热）的流体发生泄漏，要将其妥善排放，避免对人员和环境造成危害。遵守国家法规。
- 高度易燃材料应始终与产品保持安全距离。
- 确保遵守事故防范规定。
- 确保遵守当地或通用法规 [如 IEC、VDE 等]，以及当地能源供应公司的指示。

遵守直接贴在产品上的说明，并使其保持清晰可辨：

- 警告和危险提示
- 型号铭牌
- 旋转方向箭头/流向符号
- 接口标记

此设备可由 8 岁以上的儿童及生理、感知或心理有缺陷或缺少经验和相关知识的人员进行操作，但前提是有人对其进行监管或其经过有关安全使用设备的培训且已了解操作设备可能带来的危险。禁止将此装置当做儿童玩具。在无人监管的情况下，禁止由儿童进行清洁和维护。

3 运输和存放

3.1 发货

出厂时水泵装在纸壳箱内或固定在托盘上，并已做好防尘及防潮保护措施。

3.2 运输检验

到货后立即检查产品有无受损以及是否完整。如有缺陷，必须标注在运单上！在到货当天，将所有损坏情况告知运输公司或者生产商。如果不在当天通知，就会丧失索赔权利。

为了避免水泵在运输途中受损，到达使用地之后再拆除包装。

3.3 存放

小心

运输和存放时操作不当会导致产品损坏！

运输和临时存放时，避免产品受潮、受霜冻影响和出现机械损伤。

如果有盖子，将盖子盖到管道接口上，避免污物和其他异物进入水泵壳体。

每周用套筒扳手旋转一次泵轴，避免轴承擦伤、泵轴粘住。

如果需要存放较长时间，请联系 Wilo 公司咨询应采取哪些防腐措施。

警告

错误运输可能导致人员受伤！

若以后再次运输该水泵，则须将其正确包装以保证安全运输。为此应使用原厂包装，或者使用与此相当的包装。

3.4 为了安装/拆卸目的运输

警告

人身伤害危险！

不规范地运输可能会导致人身伤害！

- 根据尺寸和类型不同，用叉车或者索环卸载包装箱、木质板条箱、托盘或者纸壳箱。
- 始终使用符合当地法规的升降装置吊起重量超过 30 kg 的重型件。
  – 承载能力必须与重量相符！
- 必须使用允许的吊具（例如滑轮组、吊车等）运输水泵。吊具必须固定在水泵法兰上，必要时固定在电机外径上。
  – 其中必须采取安全措施，防止滑脱！
- 在用吊环起吊机器或部件时，只能使用符合当地安全规程的羊角吊钩或卸扣。
- 电机上的运输吊环只允许用于运输电机，不允许用于运输整个水泵。
- 吊链或者吊绳在通过吊环上方或者穿过吊环，或者通过锋利边缘上方时，要使用保护装置。
- 使用滑轮组或类似升降装置时，注意垂直提升吊重。
- 避免提升起来的吊重摆动。
  – 使用第二套滑轮组可以避免摇摆。操作期间，两套滑轮组的牵引方向与垂直方向的夹角必须小于 30°。
- 绝不能使羊角吊钩、吊环或卸扣承受弯曲力，其负重轴必须在拉力方向上！
- 提升时注意，吊绳的负重极限在斜拉中会降低。
  – 使所有承重元件尽可能朝垂直方向承受负荷，能在最大程度上保证绳具的安全性和有效性。如果有必要就使用一个起吊臂，吊绳可以垂直固定在上面。
- 应划出一个安全区，避免在吊重或者吊重的一部分滑落，或者吊具断裂或者有裂纹时，发生任何危险状况。
- 绝不能将吊重保持在升高位置上超过必要时间！在起吊过程中进行加速和制动时，避免危及人身安全。

在用吊车起吊时，必须如图所示，使用适当的皮带或吊绳缠绕水泵。将水泵套在皮带或吊绳套圈中，皮带或吊绳套圈在水泵重力的作用下拉紧。

电机上的运输吊环在此只用于起吊时穿引吊具！

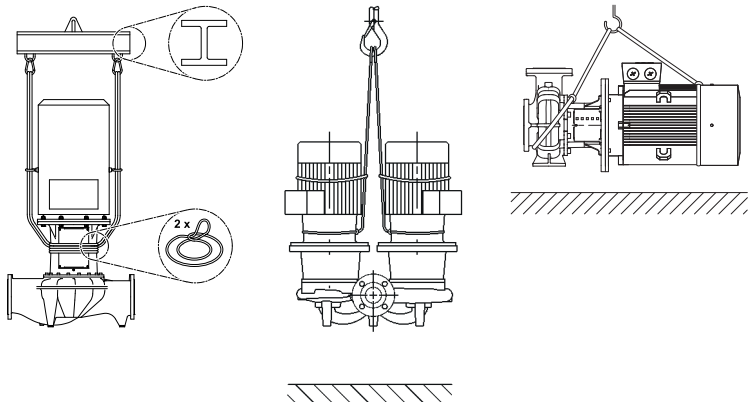

警告

损坏的运输吊环可能发生断裂，造成重大人身伤害。

- 每次使用时，都必须检查运输吊环有无损坏，以及固定是否牢固。

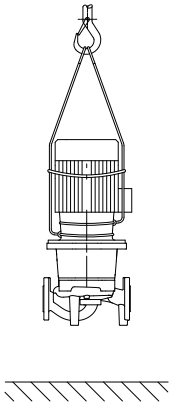

运输水泵

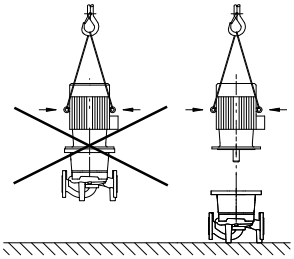

运输电机

电机上的运输吊环只允许用于运输电机，不允许用于运输整个水泵！

危险

零件掉落导致生命危险！

水泵本身以及水泵的零件可能具有很大的自重。零件掉落会造成割伤、挤伤、挫伤或者可能发生致人死亡的撞击。

- 始终使用适当的提升设备，并固定住零件防止其掉落。
- 严禁在悬吊的吊重下逗留。
- 存放和运输时，以及开始所有安装和装配工作之前，确保水泵位置稳定或者固定良好。

警告

如因未固定而导致水泵掉落，会造成人身伤害！

带螺纹孔的支脚只用于固定用途。在未经固定状态下，水泵可能稳定性不足。

- 切勿使水泵在未经固定状态下依靠支脚站立。

4 规定用途和滥用

4.1 规定用途

Atmos GIGA-I（管道单头泵）、Atmos GIGA-D（管道双头泵）和 Atmos GIGA-B（直联泵）系列的干转子泵设计用作建筑楼宇技术领域的循环泵。

允许用于：

- 热水供暖系统
- 冷却水和冷水循环回路
- 工业用水系统
- 工业循环系统
- 热载体循环回路

按规定使用还包括遵守本说明书的规定以及水泵上的参数和标识。
任何超出所述范围的使用都视为滥用，滥用会导致质保失效。

4.2 滥用

只有符合安装及操作说明书“规定用途”章节中的要求时，才能保证产品运行可靠。切勿超过或低于目录/数据表中给出的极限值。

警告！ 滥用水泵可能导致危险情况和损失。

- 切勿使用其他未经生产商许可的流体。
- 流体中不允许存在的物质可能造成水泵损坏。研磨性固体（例如沙子）会增大水泵的磨损。
- 未经防爆许可，水泵不适合在潜在爆炸环境中使用。

- 将高度易燃材料/流体与产品保持安全距离。
- 切勿执行未获许可的作业。
- 切勿超出规定的应用范围。
- 切勿擅自改装。
- 请只使用获得授权的附件和原装备件。

典型的安装地点是设备间，设备间位于建筑物内部，安装有其他建筑设备。不允许将本水泵直接安装在具有其他用途的室内（起居间和工作间）。

只有相应的特殊版本（电机备有停机加热装置）方可安装在室外。参见“连接停机加热装置”章节。

5 产品相关数据

5.1 型号代码

示例：	
Atmos GIGA-I 250/420-110/4 **Atmos GIGA-D 150/315-45/4** **Atmos GIGA-B 125/315-45/4/6**	
Atmos GIGA-I Atmos GIGA-D Atmos GIGA-B	法兰端水泵作为管道单头泵 法兰端水泵作为管道双头泵 法兰端水泵作为直联泵
250	法兰接口的公称直径 DN，单位 mm （Atmos GIGA-B：压力侧）
420	叶轮标称直径，单位 mm
110	电机额定功率 P2，单位 kW
4	电机极数
6	60 Hz 规格

表 *1:* 型号代码

5.2 技术数据

特性	数值	备注
额定转速	50 Hz 规格： • Atmos GIGA-I/-D/-B（2/4 极）：2900 rpm 或 1450 rpm	取决于水泵型号
额定转速	60 Hz 规格： • Atmos GIGA-I/-B（2 极/4 极）：3500 rpm 或 1750 rpm	取决于水泵型号
公称直径 DN	Atmos GIGA-I：32 ~ 250 mm Atmos GIGA-D： 32 ~ 200 mm Atmos GIGA-B： 32 ~ 150 mm（压力侧）	
管道接口和测压接口	符合 DIN EN 1092-2 标准的 PN 16 法兰，带符合 DIN 3858 标准的 Rp ⅛ 测压接口。 部分采用 PN 25，取决于水泵类型	
允许的最高/最低介质温度	-20 °C ~ +140 °C	取决于流体和工作压力（针对较低温度，部分应要求设计为特殊版本）
运行时的最低/最高环境温度	0 °C ~ +40 °C	更低或更高环境温度敬请垂询
存放时的最低/最高温度	-30 °C ~ +60 °C	

特性	数值	备注
允许的最大工作压力	最高 DN 200： 16 bar（最高 + 120 °C） 13 bar（最高 + 140 °C） （版本 ... -P4：25 bar） DN 250： 16 bar（最高 + 140 °C）	版本 ... -P4 (25 bar) 作为特殊版本另行收费（可用性取决于水泵类型）
绝缘等级	F	
防护等级	IP55	
允许的介质	符合 VDI 2035 第 1 和 2 部分的暖气水 工业用水 冷却水/制冷水 乙二醇体积含量最高 40% 的水-乙二醇混合物	标准规格 标准规格 标准规格 标准规格
允许的介质	热载油	特殊版本或辅助设备（另行收费）
允许的介质	其他介质（敬请垂询）	特殊版本或辅助设备（另行收费）
电气连接	3~400 V，50 Hz	标准规格 （50 Hz 版本）
电气连接	3~380 V，60 Hz	部分标准规格 （60 Hz 版本）
特殊电压/频率	使用不同电压或其他频率电机的水泵请垂询。	特殊版本或辅助设备（另行收费）
PTC 热敏电阻传感器	5.5 kW 以上标准规格	其他电机功率需另行收费
转速调节，换极	Wilo 控制器（比如 Wilo-CC-HVAC 系统）	标准规格
转速调节，换极	换极	特殊版本或辅助设备（另行收费）

表 *2:* 技术数据

凭电机商品号即可在此查阅符合欧盟指令EU2019/1781的详尽电机数据：https://qr.wilo.com/motors

补充说明 **CH**	允许的流体
供暖泵	暖气水 （符合 VDI 2035/VdTÜV Tch 1466/**CH：符合 SWKI BT 102-01）** ... 无除氧剂，无化学密封剂（注意防腐密封设备符合 VDI 2035 **(CH: SWKI BT 102-01)**；需处理泄漏位置）。

介质

水-乙二醇混合物或者黏度与纯水不同的介质会使水泵的功耗升高。只能使用含缓蚀剂的混合物。**注意遵守相应的生产商说明！**

- 必要时调节电机功率。
- 流体必须不含沉淀物。
- 如果使用其他介质，需要 Wilo 公司的许可。
- 使用水-乙二醇混合物时，一般建议使用带有相应机械密封的S1款型。
- 标准密封/标准机械密封与流体的兼容性通常在常规设备条件下给出。
  特殊情况下可能需要特殊密封，比如：
  - 流体中含有固体、油或腐蚀 EPDM 的物质，
  - 系统中含有空气等

注意所输送流体的安全数据表！

5.3 供货范围

- 水泵
  （Atmos GIGA-I 250 包括用于水泵安放和地基固定的安装底脚）

- 安装及操作说明书

5.4 附件

附件必须单独订购：

Atmos GIGA-I/-D/-B：

- 用于开关柜安装的 PTC 热敏电阻跳闸单元

Atmos GIGA-I/-D：

- 3 个托架，带用于地基安装的固定材料

Atmos GIGA-D：

- 用于修理插件的盲法兰

Atmos GIGA-B：

- 对于 5.5 kW 及以上的额定功率，带用于地基或底座安装的垫板

详细列表请参见产品目录及备件资料。

6 水泵说明

这里所述的所有水泵都是结构紧凑、连接了电机的低压离心泵。机械密封免维护。这些水泵既可以作为管道泵直接安装在充分固定的管路中，也可以放在地基基座上。安装方式取决于水泵规格。合适的 Wilo 控制器（例如 Wilo-CC-HVAC 系统）可以连续调节水泵的功率。这样便可根据系统需要理想调节水泵功率，实现经济的水泵运行。

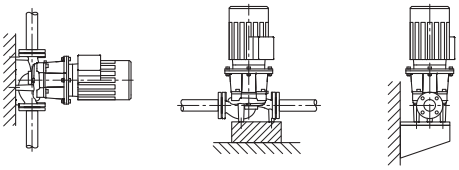

Fig. 1: Atmos GIGA-I 视图

Atmos GIGA-I 规格

水泵壳体采用串联结构形式，也就是入口侧和出口侧的法兰位于同一条中线上。所有泵壳都配有支脚。对于 5.5 kW 及以上额定功率，建议安装到地基基座上。

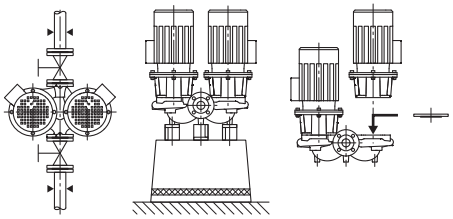

Fig. 2: Atmos GIGA-D 视图

Atmos GIGA-D 规格

将两个水泵放置在共同的外壳中（双头泵）。水泵壳体采用串联结构形式。所有泵壳都配有支脚。对于 4 kW 及以上额定功率，建议安装到地基基座上。

与一个控制器相连接，只能使基本负荷水泵在控制模式下运行。在满负荷运行中，第二个水泵可用作高峰负荷泵组。发生故障时，第二个水泵可承担备用功能。

注意

Atmos GIGA-D 系列水泵，无论哪种型号，哪种外壳规格，都可订购盲法兰（附件）。使用盲法兰的情况下，更换电机叶轮组（配备叶轮和接线盒的电机）时，驱动装置可以保持运转。

注意

为了确保备用水泵的运行就绪状态，必须每 24 个小时，或者至少每周一次，将其投入运行。

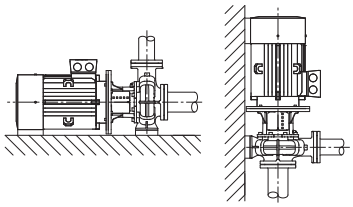

Fig. 3: Atmos GIGA-B 视图

Atmos GIGA-B 规格

尺寸符合 DIN EN 733 标准的蜗壳泵。

水泵壳体上铸造有支脚。对于 5.5 kW 以上的电机功率：电机上铸造有支脚，或采用螺栓连接方式连接支脚。

对于 5.5 kW 及以上额定功率，建议安装到地基基座上。

6.1 预期噪声水平

电机功率 [kW]	测量平面声压级 Lp，A [dB(A)] [1]	
	2900 rpm	1450 rpm
	Atmos GIGA-I/-D/-B	Atmos GIGA-I/-D/-B
37	77	70

电机功率 [kW]	测量平面声压级 Lp，A [dB(A)] [1]	
	2900 rpm	1450 rpm
45	72	72
55	77	74
75	77	74
90	77	72
110	79	72
132	79	72
160	79	74
200	79	75
250	85	–

[1]) 在距离电机表面 1 m 处的一个方形测量面上测得的声压级空间平均值

表 *3:* 预期噪声水平 (50 Hz)

7 安装

7.1 工作人员资格鉴定

- 安装/拆卸工作：必须由专业人员执行，而且要求该人员接受过相关培训，了解工作中会用到的工具以及固定材料。

7.2 运营者的责任

- 遵守国家和地区法规！
- 遵守本地现行的同业工伤事故保险联合会的事故防范规定和安全规定。
- 提供防护装备并保证工作人员佩戴防护装备。
- 遵守与处理重物有关的所有法律法规。

7.3 安全

危险

缺失防护装置导致生命危险！

如果缺失接线盒的防护装置或者联轴器/电机区域内缺失防护装置，则电击或者接触正在旋转的部件都可能导致致命伤害。

- 开始试运行之前，必须将先前拆卸的防护装置，例如联轴器罩壳等重新安装好！

危险

零件掉落导致生命危险！

水泵本身以及水泵的零件可能具有很大的自重。零件掉落会造成割伤、挤伤、挫伤或者可能发生致人死亡的撞击。

- 始终使用适当的提升设备，并固定住零件防止其掉落。
- 严禁在悬吊的吊重下逗留。
- 存放和运输时，以及开始所有安装和装配工作之前，确保水泵位置稳定或者固定良好。

警告

高温表面！

整个水泵的温度可能极高。有烫伤危险！

- 执行任何工作前都应先使水泵冷却！

警告

烫伤危险！

如果流体温度和系统压力高，应先将水泵冷却并使系统进入无压状态。

小心

过热会损坏水泵！

不允许在没有流量的情况下运行水泵超过 1 分钟。能量堆积会产生热量，可能损坏轴、叶轮和机械密封。

- 确保不低于最小体积流量 Q_{min}。

Q_{min} 的计算公式：

Q_{min} = 10% x Q_{max} 水泵

7.4 水泵法兰处允许的力和扭矩

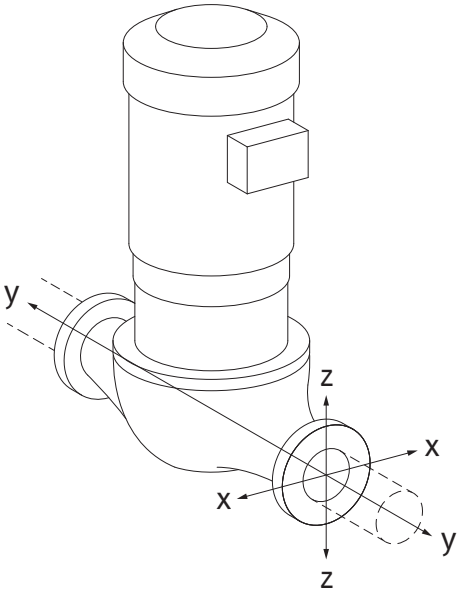

Fig. 4: 荷载条件16A，EN ISO 5199，附录B

悬挂在管路中的水泵，荷载条件16A

DN	力 F [N]				扭矩 M [Nm]			
	F_X	F_Y	F_Z	Σ 力 F	M_X	M_Y	M_Z	Σ 扭矩 M
压力和吸入法兰								
32	450	525	425	825	550	375	425	800
40	550	625	500	975	650	450	525	950
50	750	825	675	1300	700	500	575	1025
65	925	1050	850	1650	750	550	600	1100
80	1125	1250	1025	1975	800	575	650	1175
100	1500	1675	1350	2625	875	625	725	1300
125	1775	1975	1600	3100	1050	750	950	1525
150	2250	2500	2025	3925	1250	875	1025	1825
200	3000	3350	2700	5225	1625	1150	1325	2400
250	3725	4175	3375	6525	2225	1575	1825	3275
数值符合*ISO/DIN 5199-II*级（*2002*）附录*B*								

表 *4:* 垂直管路中的水泵法兰处允许的力和扭矩

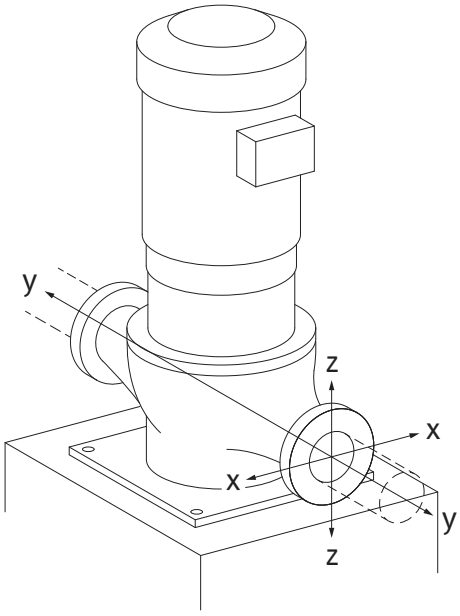

Fig. 5: 荷载条件17A， EN ISO 5199， 附录B

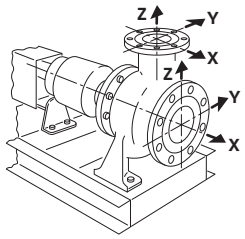

Fig. 6: 荷载条件1A

固定在水泵支脚上的立式水泵，荷载条件17A

DN	力 F [N]				扭矩 M [Nm]			
	F_X	F_Y	F_Z	Σ 力 F	M_X	M_Y	M_Z	Σ 扭矩 M
压力和吸入法兰								
32	338	394	319	619	300	125	175	550
40	413	469	375	731	400	200	275	700
50	563	619	506	975	450	250	325	775
65	694	788	638	1238	500	300	350	850
80	844	938	769	1481	550	325	400	925
100	1125	1256	1013	1969	625	375	475	1050
125	1331	1481	1200	2325	800	500	700	1275
150	1688	1875	1519	2944	1000	625	775	1575
200	2250	2513	2025	3919	1375	900	1075	2150
250	2794	3131	2531	4894	1975	1325	1575	3025
数值符合*ISO/DIN 5199-II*级（*2002*）附录*B*								

表 *5:* 水平管路中的水泵法兰处允许的力和扭矩

卧式水泵，套管在X轴线上呈轴向，荷载条件1A

DN	力 F [N]				扭矩 M [Nm]			
	F_X	F_Y	F_Z	Σ 力 F	M_X	M_Y	M_Z	Σ 扭矩 M
吸入侧法兰								
50	578	525	473	910	490	350	403	718
65	735	648	595	1155	525	385	420	770
80	875	788	718	1383	560	403	455	823
100	1173	1050	945	1838	613	438	508	910
125	1383	1243	1120	2170	735	525	665	1068
150	1750	1575	1418	2748	875	613	718	1278
200	2345	2100	1890	3658	1138	805	928	1680
数值符合*ISO/DIN 5199-II*级（*2002*）附录*B*								

表 *6:* 水泵法兰处允许的力和扭矩

卧式水泵，套管在z轴线上部，荷载条件1A

DN	力 F [N]				扭矩 M [Nm]			
	F_X	F_Y	F_Z	Σ 力 F	M_X	M_Y	M_Z	Σ 扭矩 M
压力侧法兰								
32	315	298	368	578	385	263	298	560
40	385	350	438	683	455	315	368	665
50	525	473	578	910	490	350	403	718
65	648	595	735	1155	525	385	420	770
80	788	718	875	1383	560	403	455	823
100	1050	945	1173	1838	613	438	508	910
125	1243	1120	1383	2170	735	525	665	1068
150	1575	1418	1750	2748	875	613	718	1278
数值符合*ISO/DIN 5199-II*级（*2002*）附录*B*								

表 *7:* 水泵法兰处允许的力和扭矩

如果并非所有起作用的负荷均达到了允许的最大值，则这些负荷中可有一个在遵守相应前提的情况下超出常规极限值。前提是指确保能够满足以下附加条件：

- 所有组件的力或扭矩最高可达允许的最大值的 1.4 倍。
- 作用于每个法兰上的力和扭矩满足补偿方程式的条件。

$$\left(\frac{\sum|F|_{\text{effective}}}{\sum|F|_{\text{max. permitted}}}\right)^2 + \left(\frac{\sum|M|_{\text{effective}}}{\sum|M|_{\text{max. permitted}}}\right)^2 \leq 2$$

Fig. 7: 补偿方程式

$\Sigma F_{有效值}$和$\Sigma M_{有效值}$是两个水泵法兰（入口和出口）有效值的算术总和。$\Sigma F_{max.\ permitted}$ 和 $\Sigma M_{max.\ permitted}$ 是两个水泵法兰（入口和出口）最大允许值的算术总和。补偿方程式中不考虑 Σ F 和 Σ M 的代数符号。

材料和温度的影响

允许的最大力和扭矩适用于基本材料灰口铸铁和初始温度为20 °C的情况。
如果温度更高，必须根据其弹性模量的比率对数值进行如下修正：

$E_{t,\,GG} / E_{20,\,GG}$

$E_{t,\,GG}$ =所选温度下灰口铸铁的弹性模量

$E_{t,\,GG}$ =20 °C时灰口铸铁的弹性模量

7.5 准备安装

检查水泵是否与交货通知上的说明一致；如果零件有损坏或者缺失，必须立即通知 Wilo 公司。检查木质板条箱/纸板箱/包装纸中是否有与水泵可能包装在一起的备件或者附件。

警告

因不当操作会造成人身和物品损伤危险！

- 只有完成所有焊接和钎焊工作以及可能需要执行的管道系统冲洗之后，才能安装水泵。
  – 污物可能使水泵工作不正常。

安放位置

- 将水泵安装在不受气候影响、无雾、无尘、通风良好、隔振、没有爆炸危险的环境内。切勿露天放置水泵！注意遵守“规定用途”章节的说明！
- 将水泵安装在容易够到的位置。方便日后检查、保养（比如更换机械密封等）或者更换。
  注意墙壁和电机风扇罩之间的轴向最小间距：自由拆卸尺寸为最小 200 mm + 风扇罩直径。
- 在水泵安放地点上方，安装一台用于放置升降装置的装置。水泵总重：见目录或数据表。

地基

小心

地基不当或整泵安放错误！

地基不当或整泵未正确安放在地基上可能导致水泵损坏。

- 这类损坏不在保修范围内。
- 绝对不可将整泵放在未固定或不承重的平面上。

注意

针对个别水泵类型要进行隔振安装，此时需要用一个弹性隔垫（如软木塞或MAFUND®板）将地基板与建筑物同时分开。

警告

操作不当会造成人身伤害和物资损失！

如果承载重量过大，安装在电机外壳上的运输吊环会断裂。这可造成人员重伤，产品受损！

- 只能使用经过许可的吊具（比如滑轮组、吊车等）提升水泵。参见“运输和存放”章节。
- 电机外壳上安装的运输吊环只允许用于运输电机！

注意

简化日后对整泵的工作！

- 在水泵前后安装止回阀，这样就无需排空整个设备。

必要时应配备止回阀。

冷凝水排放

- 在空气调节或冷却系统中使用水泵：
  联接架内产生的冷凝水可以有针对性地通过一个现有的钻孔排出。也可以在这个孔上连接一根排水管，用于排放溢出的少量液体。
- 通气阀（Fig. XXIX/XXX/XXXII，位置1.31）必须始终朝上。

安装位置

Atmos GIGA-I/-D

允许的/不允许的安装位置

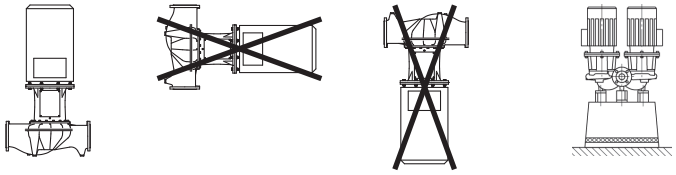

- 安装位置：
  只允许立式安装。

Atmos GIGA B

允许的安装位置

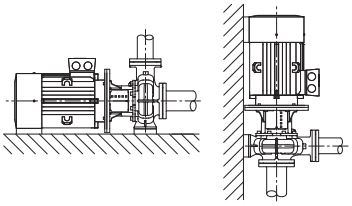

注意

将Atmos GIGA-B系列的直联泵安放在承重力足够大的地基或支架上（Fig. 3）。
电机功率超过18.5 kW的电机必须采取支撑措施。（参见 Atmos GIGA-B 安装示例）。

必须支撑水泵壳体和电机。为此，可使用 Wilo 附件产品系列中适当的垫板。

电机处于竖直安装状态时，必须拧紧水泵壳体支脚和电机外壳支脚，而且必须无张力拧紧。

为了实现无张力安装，必须对电机壳体支脚和水泵壳体支脚之间的高度差进行补偿，使其平衡。

注意

电机接线盒不得指向下方。需要时可以在松开六角头螺钉后旋转电机或电机叶轮组。注意旋转时不要损坏壳体 O 型圈密封件。

Atmos GIGA-B 安装示例：

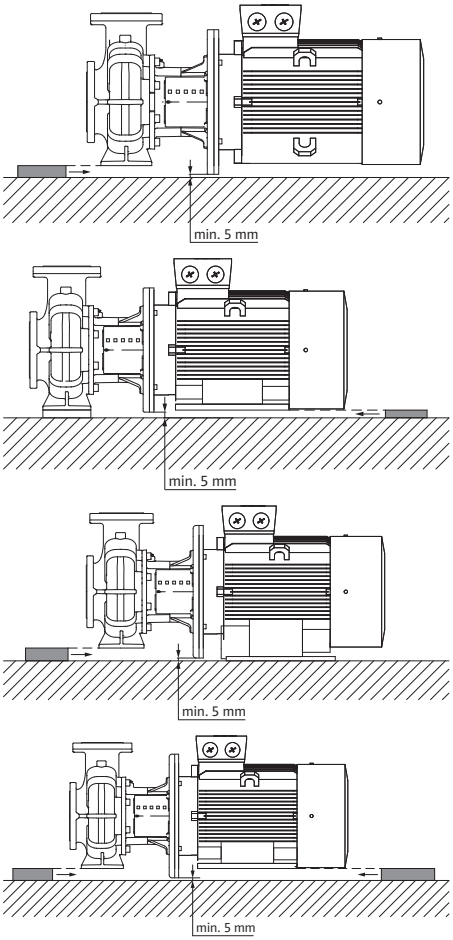

支撑泵壳

电机被支撑

支撑泵壳，电机固定在地基上

支撑泵壳和电机

注意

从开放式蓄水罐（比如冷却塔等）输送流体时，注意保证液位始终充分超过水泵的进水口。这样可以避免水泵干转运行。必须遵守最小进流压力。

注意

对于采取绝缘措施的设备，只允许将水泵壳体绝缘。切勿将联接架和电机绝缘。

地基螺纹连接示例

- 将水泵安放到地基上时，用水准仪（在轴/出水口上）校准成套整泵。
- 将垫板 (B) 始终安装在底座 (E) 和地基 (D) 之间的固定材料（例如地脚螺栓 (A)）左右两边。
- 均匀用力，拧紧固定材料。
- 如果距离 > 0.75 m，则在固定元件之间的中间位置为底座进行支撑。

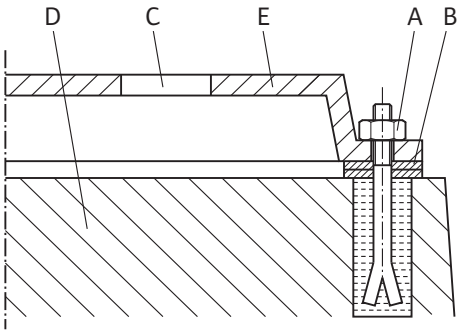

Fig. 8: 地基螺纹连接示例

连接管路

小心

操作不当可能导致损坏！

切勿将水泵用作管路的固定点。

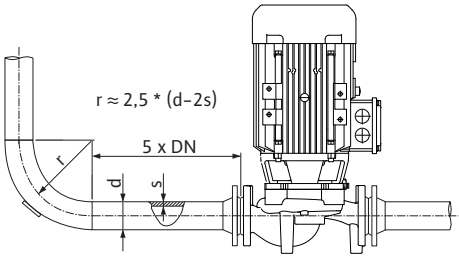

Fig. 9: 水泵前面、后面的稳定管段

- 整套设备现有的汽蚀余量必须始终超过水泵所需的汽蚀余量。
- 由管路系统施加在水泵法兰上的力和力矩（例如由于扭曲、热膨胀）不得超过允许的力和力矩。
- 在没有机械应力的情况下安装管路和水泵。
- 在固定管路时应注意不要使水泵承受管道的重量。
- 吸入管路要尽可能短。吸入管路在通向水泵时应始终向上敷设，在进水口处则向下敷设。避免进入空气。
- 如果在吸入管路中需要一个挡泥板，则其自由截面必须相当于管路截面的 3-4 倍。
- 对于短管路，公称直径必须至少相当于水泵接口的公称直径。对于长管路，则选择最为经济的公称直径。
- 为了避免出现压力损失较高的情况，较大公称直径的转接器应设计为具有大约 8° 的扩展角。

注意

避免空穴现象！

- 在水泵的前、后均安装直管路作为稳定管段。稳定管段的长度必须大于 5 倍泵法兰公称直径。

- 在安装管路之前，拆下水泵入口管和压力喷嘴上的法兰盖。

终检

再次根据“安装”章节所述，检查整泵的对中情况。

- 如果有必要，补充拧紧地脚螺栓。
- 检查所有接口是否正确及功能是否正常。
- 联轴器/轴必须可以用手转动。

如果联轴器/轴无法转动：

- 松开联轴器，并用规定的扭矩将其重新拧紧。

如果这个措施无效：

- 拆卸电机（参见“更换电机”章节）。
- 清洁电机定心装置和法兰。
- 重新安装电机。

8 电气连接

危险

触电导致生命危险！

建议使用热过载防护装置！

执行电气作业时不按规定操作，会发生电击致死事故！

- 电气连接工作须由具备资质的专业电工按照现行法规执行！
- 注意遵守事故防范法规！
- 在产品上作业之前先确认水泵和驱动装置均已断电。
- 确认作业结束之前无人能重新接通电源。
- 电气设备必须接地。接地方式必须适合驱动装置，并符合现行的标准和规定。接地端和固定件的尺寸必须合适。
- 注意附件的安装及操作说明书！

危险

触电造成生命危险！

触摸通电部件会导致死亡或重伤！

即便断开连接，由于电容器未放电，接线盒内仍会出现较高的接触电压。因此必须先等待 5 分钟，之后才能开始在接线盒模块上作业！

- 全极切断电源电压，采取安全措施防止重新接通！
- 检查所有接口（以及无电势触点）有无电压！
- 切勿将钉子、螺丝刀、电线等物体插入接线盒开孔中！
- 重新安装之前拆下的防护装置（例如接线盒盖等）！

小心

电气连接不当会导致物资损失！
电源规格不足会由于电源过载而导致系统失灵和电缆火灾事故！

- 在进行与所用电缆横截面和保险丝有关的电网设计时，必须考虑到在多泵运行模式下可能出现所有水泵短暂同时运行的情况。

准备工作/提示

- 使用一根固定的接线电缆建立电气连接，该接线电缆应配有一个插接装置或者接触窗口开口宽度至少达到 3 mm 的全极开关（VDE 0730/第 1 部分）。
- 为了杜绝由于渗漏水造成损失，同时消除电缆螺纹接头的应力，应使用外径足够大的接线电缆并牢牢拧紧。
- 在螺纹接头附近弯折电缆，使其形成一个排水回路，排出形成的水滴。
  定位电缆螺纹接头并相应敷设电缆，以此确保没有水滴进入接线盒内。必须用生产商规定的塞子封住没有占用的电缆接头。
- 敷设接线电缆，确保既不会接触管路，也不会接触水泵。
- 如果流体温度高于 90 °C，需要使用耐热的接线电缆。
- 电源连接的电流类型和电压必须与型号铭牌上的说明一致。
- 电源侧保险丝：取决于电机标称电流。
- 连接外部变频器时，注意安装及操作说明书的相关说明！如果放电电流较高，必要时进行辅助接地。
- 必须安装电机保护开关或 PTC 热敏电阻跳闸单元（附件）防止电机过载。

标准泵连接外部变频器

如果将标准泵连接在外部变频器上使用，注意下面几项涉及绝缘系统和绝缘轴承的说明：

400 V 电网
Wilo 使用的干转子泵电机适合连接外部变频器运行。
强烈建议按照 IEC TS 60034-25:2014 标准进行安装和运行。由于变频器领域的发展快速，WILO SE 不保证电机连接第三方变频器能无故障运行。

500 V/690 V 电网
Wilo 标配的干转子泵电机在 500 V/690 V 电网中不适合连接第三方变频器运行。
在 500 V 或 690 V 电网中使用时，需要使用装备相应线圈和增强型绝缘系统的电机。订购时必须详细说明。必须按照 IEC TS 60034-25:2014 标准执行整个安装过程。

绝缘轴承
由于变频器的切换过程越来越快，因此即便是小功率电机，也可能通过电机轴承导致电压降。如果由于轴承电流导致过早断电，则使用电流绝缘轴承！

将变频器连接在电机上时，必须注意下列事项：

- 注意变频器生产商提供的安装指南。
- 注意变频器安装及操作说明书给出的不同电缆长度的上升时间和峰值电压。
- 使用截面足够大的合适电缆（最大 5% 电压损失）。
- 根据变频器生产商建议，连接正确的屏蔽。
- 与主电缆隔离铺设数据线（比如 PTC 评估）。
- 必要时与变频器生产商协议，使用正弦波滤波器 (LC)。

注意

电气连接的接线图张贴在接线盒盖内。

设置电机保护开关：

- 根据电机铭牌上标注的参数设置电机标称电流。
  星三角启动：如果电机保护开关切换到星三角接触器组合的馈电线，则设置和直接启动时一样。
  如果电机保护开关切换到电机馈电线的一条支线（U1/V1/W1 或 U2/V2/W2），则需将电机保护开关设置为 0.58 x 电机标称电流的值。
- 将 PTC 热敏电阻传感器连接到 PTC 热敏电阻跳闸单元上。

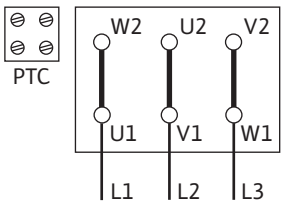

Fig. 10: 星三角启动

小心

物资损失危险！

在 PTC 热敏电阻传感器端子上，最大只允许施加 7.5 V 的直流电压。更高的电压会破坏 PTC 热敏电阻传感器。

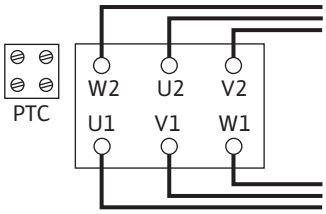

Fig. 11: 三角形电路

- 电源连接取决于电机功率 P2、供电电压和启动方式。接线盒中连接桥所需的电路参见下表以及Fig. 10和Fig. 11。

启动方式	供电电压 3~ 400 V
星三角启动（标准）	取下连接桥（Fig. 10）。
通过软启动器启动	三角形电路（Fig. 11）

表 *8:* 端子的分配

- 在连接自动工作的开关设备时，注意相应的安装及操作说明书。
- 对于带有星三角电路的交流电机，确保星形和三角形电路之间的切换点要在时间上间隔紧密。**切换时间较长可能导致水泵损坏。**
  建议的星三角启动时间设置：

电机功率	待设置的时间
> 30 kW	< 5 秒

小心

即使暂时的干转运行也会损坏机械密封！

只有在设备充满水之后才能进行旋转方向检查！

注意

建议使用软启动器，以限制启动电流，避免触发过电流保护装置。

8.1 停机加热装置

针对由于气候条件而存在冷凝危险的电机，建议配备停机加热装置。具体涉及比如潮湿环境中处于停机状态的电机、承受剧烈温度波动的电机等。出厂时配备停机加热装置的电机，可作为特殊版本订购。停机加热装置用于保护电机绕组，避免电机由于冷凝水进入内部而受到损坏。

- 将停机加热装置连接到接线盒的 HE/HE 端子上（连接电压：1~230 V/50 Hz）。

小心

操作不当可能导致损坏！

电机运行期间不得接通停机加热装置。

9 试运行

- 电气作业：电气作业必须由专业电工执行。
- 安装/拆卸工作：必须由专业人员执行，而且要求该人员接受过相关培训，了解工作中会用到的工具以及固定材料。
- 操作人员必须了解整台设备的工作原理。

危险

缺失防护装置导致生命危险！

如果缺失接线盒的防护装置或者联轴器/电机区域内缺失防护装置，则电击或者接触正在旋转的部件都可能导致致命伤害。

- 开始试运行之前，必须将接线盒盖或联轴器罩壳等之前拆下的防护装置重新安装好！
- 开始试运行之前，必须先由获得授权的专业人员对水泵和电机上的安全装置进行功能检查！

警告

喷射出的流体和松动的部件可能导致人员受伤！

水泵/设备安装不当，可能在试运行阶段导致人员重伤！

- 必须谨慎执行所有作业！
- 在试运行过程中保持距离！
- 执行所有作业时，都要穿戴防护服、佩戴防护手套和护目镜。

注意

建议由 Wilo 公司客户服务人员将水泵投入运行。

准备工作

在试运行之前，水泵的环境温度必须适当。

9.1 预调试

- 检查轴是否可以转动而没有摩擦。如果叶轮锁死或者有摩擦，则松开联轴器螺栓，以规定的扭矩将其重新拧紧。（参见表格“螺栓拧紧扭矩”）。
- 正确为设备充气和排气。

9.2 填充和排气

小心

干转运行会损坏机械密封！可能导致泄漏。

- 禁止水泵空运行。

警告

接触水泵/设备有烫伤或因低温而粘住的危险。

视水泵和设备的运行状态而定（流体温度），整个水泵可能温度很高或温度很低。

- 在运行过程中保持距离！
- 使设备和水泵冷却至室温！
- 执行所有作业时，都要穿戴防护服、佩戴防护手套和护目镜。

危险

特别热或者冷的受压液体会造成人身及物品损伤危险！

根据流体温度的不同，完全打开排气装置时可能有液态或者气态的、温度超高或温度超低的流体溢出。根据系统压力的不同，流体可能在高压下喷出。

- 打开排气装置时必须小心谨慎。

正确灌注设备和排气。

1. 为此，松开通气阀并为水泵排气。
2. 排气结束后重新拧紧通气阀，使水不再流出。

注意

- 务必遵守最小进流压力！

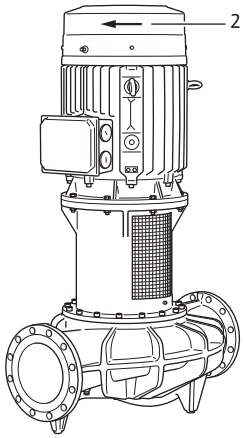

Fig. 12: 检查旋转方向

- 为了避免产生气蚀噪音和造成损坏，必须保证水泵的进水口达到最小进流压力。最小进流压力取决于水泵的运行状况和工况点。必须相应地规定最小进流压力。
- 用于规定最小进流压力的主要参数包括水泵在其工况点时的 NPSH 值以及流体的蒸汽压力。NPSH 值参见不同型号水泵的技术文档。

1. 通过短暂地通电，检查旋转方向是否与风扇罩上的箭头一致。若旋转方向错误，则进行如下操作：

- 如果是直接启动：交换电机接线端子板上的两个相（例如 L1 与 L2 互换）。
- 如果是星三角启动：
  在双绕组电机的接线端子板上，交换绕组各自的始端和末端（例如 V1 与 V2 互换、W1 与 W2 互换）。

9.3 开启

- 只有在出口侧断流装置关闭时才能开启整泵！达到满载转速后，再慢慢打开断流装置，并将其调节到工况点。

整泵的运行必须平稳、无振动。
机械密封保证密闭无泄漏，不需要特别的设置。在密封的磨合阶段结束后，起初可能会有的微小泄漏完全消失。

危险

缺失防护装置导致生命危险！

如果缺失接线盒的防护装置或者联轴器/电机区域内缺失防护装置，则电击或者接触正在旋转的部件都可能导致致命伤害。

- 在结束所有工作之后，必须重新安装和启用所有规定的安全和防护装置！

9.4 关闭

- 关闭压力管中的断流装置。

注意

如果压力管中安装了止回阀而且存在背压，断流装置就可以保持打开状态。

小心

操作不当可能导致损坏！

在关闭水泵时，吸入管路中的断流装置不得处于关闭状态。

- 关闭电机，让其完全惯性运行。注意惯性运行要平稳。
- 如果较长时间停机，则关闭吸入管路中的断流装置。
- 如果较长时间停机和/或有冻结危险，将水泵排空，然后采取措施防止冻结。
- 将拆卸的水泵保存在干燥且无尘的环境中。

9.5 运行

注意

水泵必须始终平稳、无振动地运行，不应在与产品目录 / 数据表中所述不一样的条件下运行。

危险

缺失防护装置导致生命危险！

如果缺失接线盒的防护装置或者联轴器/电机区域内缺失防护装置，则电击或者接触正在旋转的部件都可能导致致命伤害。

- 在结束所有工作之后，必须重新安装和启用所有规定的安全和防护装置！

警告

接触水泵/设备有烫伤或因低温而粘住的危险。

视水泵和设备的运行状态而定（流体温度），整个水泵可能温度很高或温度很低。

- 在运行过程中保持距离！
- 使设备和水泵冷却至室温！
- 执行所有作业时，都要穿戴防护服、佩戴防护手套和护目镜。

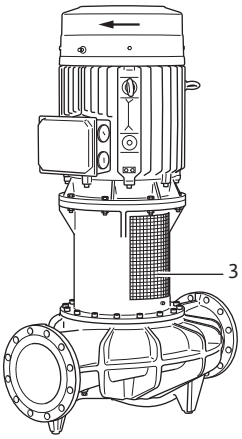

Fig. 13: 安装的联轴器防护板

可以使用不同的方式和方法开启和关闭水泵。具体取决于运行条件和安装的自动化程度。为此注意下列事项：

停止过程：

- 避免水泵内的流体回流。
- 不要以太微小的流量长时间工作。

开始过程：

- 确保水泵内已经充满流体。
- 不要以太微小的流量长时间工作。
- 为了能够正常运行，较大的水泵需要达到最低流量。
- 在断流装置关闭时运行，可能导致蜗壳中过热或者轴封损坏。
- 用足够大的汽蚀余量保证水泵的进流持续不断。
- 避免由于背压太小导致电机过载。
- 为了避免电机内部的温度急剧升高以及水泵、联轴器、电机、密封和轴承超负荷，每小时开启次数最多不可超过 10 次。

10 保养

- 保养工作：必须由熟悉所使用工作介质及其废弃处置的专业人员执行。
- 电气作业：电气作业必须由专业电工执行。
- 安装/拆卸工作：必须由专业人员执行，而且要求该人员接受过相关培训，了解工作中会用到的工具以及固定材料。

建议由 Wilo 公司客户服务部门保养和检查水泵。

危险

触电导致生命危险！

执行电气作业时不按规定操作，会发生电击致死事故！

- 对电气装置进行的工作只能由专业电工执行。
- 进行任何工作之前，将整泵断电并防止重新接通。
- 只能让专业电工排除水泵接线电缆的损坏。
- 注意水泵、液位调节装置和其他附件的安装及操作说明书。
- 切勿凿击电机上的开孔或在开孔中插入物体。
- 工作结束后，重新安装先前拆卸的防护装置，例如接线盒盖或联轴器罩壳等。

危险

零件掉落导致生命危险！

水泵本身以及水泵的零件可能具有很大的自重。零件掉落会造成割伤、挤伤、挫伤或者可能发生致人死亡的撞击。

- 始终使用适当的提升设备，并固定住零件防止其掉落。
- 严禁在悬吊的吊重下逗留。
- 存放和运输时，以及开始所有安装和装配工作之前，确保水泵位置稳定或者固定良好。

危险

工具被甩出造成生命危险！

维护电机轴所使用的工具可能在接触旋转部件时被甩出。进而导致人员受伤甚至死亡！

- 在水泵试运行之前，必须取出在维护工作时所使用的工具！

警告

接触水泵/设备有烫伤或因低温而粘住的危险。

视水泵和设备的运行状态而定（流体温度），整个水泵可能温度很高或温度很低。

- 在运行过程中保持距离！
- 使设备和水泵冷却至室温！
- 执行所有作业时，都要穿戴防护服、佩戴防护手套和护目镜。

10.1 供风装置

应定期检查电机外罩上的供风装置。污染影响电机冷却。如有必要，清理污染，恢复顺畅的空气供应。

10.2 维护工作

危险

零件掉落造成生命危险！

水泵或者某些部件掉落可能导致致命伤害！

- 安装时使用适当的吊具固定水泵部件，防止掉落。

危险

触电会导致生命危险！

检查是否无电压，盖住或者拦住旁边带电的零件。

10.2.1 更换机械密封

在磨合阶段，可能会出现少量滴漏。在水泵正常运行期间个别位置出现少量泄漏也是常见现象。
此外还应定期目检。如有明显泄漏，则要更换密封件。
Wilo 提供的修理套件中包括更换所需的零件。

拆卸：**Fig. I ... XI**

警告

烫伤危险！

如果流体温度和系统压力高，应先将水泵冷却并使系统进入无压状态。

1. 将设备断电，采取措施防止意外重新接通。
2. 检查是否无电压。
3. 将工作区域接地和短路。

4. 关闭水泵前面、后面的断流装置。
5. 断开电源线。
6. 打开通气阀（Fig. XXIX/XXX/XXXII，位置1.31），使水泵进入无压状态。

注意

执行下列所有作业时，注意为不同螺纹类型规定的拧紧扭矩（参见“拧紧扭矩”表）！

7. 使用合适的工具（比如螺丝刀）拆卸联轴器防护板（Fig. I，编号 1）。
8. 旋转联轴器/轴，使四个内六角螺栓（防扭转装置；Fig. II，编号 1）对准盖板钻孔。
9. 依次先后拧出内六角螺栓（止动销），直到头部有一半沉埋于盖罩的凸缘中（Fig. II 或 Fig. III，取决于水泵类型）。
10. 旋出全部四个盖罩螺栓 (Fig. IV)。
11. 将其中两个盖罩螺栓拧入压出孔，直至止挡位，从而可以将盖罩从其所在位置上压出 (Fig. IV/V)。
12. 拧出其中一个联轴器螺栓，将其全部拧入其中一个安装孔（Fig. VI，编号 1）。这样就使半联轴器被保持垫圈（Fig. VI，编号 3）固定在叶轮轴上。
13. 拧出其他联轴器螺栓，取出松动的联轴器半体。必要时使用规定的压出孔（Fig. VI，编号 4）。叶轮轴现在被保持垫圈（Fig. VII，编号 1）固定在上方。
14. 旋出电机轴上的六角头螺钉（Fig. VII，编号 2），以降低保持垫圈（Fig. VII，编号 1）以及叶轮/叶轮轴（Fig. VII，编号 3）。如果叶轮已经完全降低（Fig. VIII，在大约 5 mm 行程后），完全取出六角头螺钉和保持垫圈。
15. 从安装孔中旋出联轴器螺栓，取下剩下的半联轴器 (Fig. IX)。必要时使用规定的压出孔。
16. 旋出叶轮轴的中央螺栓（Fig. X，编号 2），连同保持垫圈（Fig. X，编号 3）一起取出。
17. 取出叶轮轴的两个平键（Fig. X，编号 1）。
18. 小心地从叶轮轴上拔下机械密封 (Fig. XI)，然后取出。

安装：Fig. XII ... XXIII

注意

小心地清洁叶轮轴和联接架的配合面/支承面。如果轴已经损坏，则必须将其更换。始终将新的螺栓用于防扭转保护。用新的 O 形圈更换盖槽和轴套槽中的 O 形圈。

1. 将盖罩螺栓（Fig. XII，编号 1）完全旋入两个压出孔。
2. 确保所有的内六角螺栓（止动销）已经有一半沉埋到盖罩的凸缘中 (Fig. XII)。
3. 将机械密封放到叶轮轴上，使盖罩螺栓的四个钻孔对准螺纹 (Fig. XIII)。注意：如果止动销的钻孔未互相呈 90° 排列，则注意安装位置。钻孔必须指向联接架窗口，便于能够接触螺纹销钉（Fig. II 或 Fig. III，取决于水泵类型）。推动机械密封，直到压紧螺钉放在外壳上。可以用常见的餐具清洗剂作为润滑剂。
4. 检查电机轴上的平键是否固定牢固。
5. 推入电机轴的保持垫圈，用中央螺栓将其固定住 (Fig. XIV)。确保电机轴的保持垫圈在中央螺栓完全拧入时固定牢固，并且中央螺栓的螺纹在此时处于电机轴螺纹中至少 12 mm 的位置。如果有必要，使用随附的垫圈。
6. 旋出中央螺栓，使电机轴的保持垫圈下降大约 5 mm (Fig. XIV)。
7. 将第一个平键（Fig. XV，编号 1）插入叶轮轴，放上叶轮轴的保持垫圈（Fig. XV，编号 2），然后将六角头螺钉（Fig. XV，编号 3）用手拧紧。
8. 旋转电机轴，使电机轴平键和叶轮轴平键相对。
9. 将第一个半联轴器放在两个平键和保持垫圈上 (Fig. XVI)。
10. 将叶轮轴保持垫圈中的螺纹孔对准联轴器半体的安装孔。

11. 将其中一个联轴器螺栓插入安装孔，然后旋入一半 (Fig. XVII)。

注意

执行下列所有作业时，注意为不同螺纹类型规定的拧紧扭矩（参见“拧紧扭矩”表）！

12. 用规定的扭矩拧紧叶轮轴的中央螺栓。使用带式扳手以反作用力顶住。
13. 拧紧安装螺栓 (Fig. XVII)。
14. 用规定的扭矩拧紧电机轴的中央螺栓（Fig. XVIII，编号 1）。使用带式扳手以反作用力顶住。
15. 插入叶轮轴的第二个平键（Fig. XIX，编号 2）。
16. 放上第二个半联轴器（Fig. XIX，编号 1）。
17. 均匀用力拧紧现有的联轴器螺栓，最后拧紧安装孔中的联轴器螺栓 (Fig. XX)。
18. 从盖罩中旋出机械密封的两个压紧螺钉 (Fig. XXI)。
19. 小心地将机械密封垂直压入其位置。避免由于歪斜而损坏机械密封 (Fig. XXI)。
20. 旋入全部四个盖罩螺栓（Fig. XXII，编号 1），然后以规定的扭矩拧紧。
21. 依次旋入四个内角螺栓（止动销，Fig. XXII，编号 2）并将其拧紧。
22. 安装联轴器防护板 (Fig. XXIII)。
23. 连接电机电缆。

10.2.2 更换电机

如果轴承噪音增大、有不正常的振动，说明轴承已磨损。必须更换轴承或电机。驱动装置的更换必须由 Wilo 客户服务人员执行！

拆卸：**Fig. XXIV ... XXVII**

警告

烫伤危险！

如果流体温度和系统压力高，应先将水泵冷却并使系统进入无压状态。

警告

人身伤害！

不当拆卸电机可能造成人身伤害。
- 在拆卸电机之前，确保重心不在支撑点上方。
- 在运输过程中采取措施防止电机倾翻。
- 始终使用适当的提升设备，并固定住零件防止其掉落。
- 严禁在悬吊的吊重下逗留。

1. 将整套设备断电，采取措施防止意外重新接通。
2. 检查是否无电压。
3. 将工作区域接地和短路。
4. 关闭水泵前面、后面的断流装置。
5. 打开通气阀（Fig. XXIX/XXX/XXXII，位置1.31），使水泵进入无压状态。
6. 取下电机连接线路。
7. 使用合适的工具（比如螺丝刀）拆卸联轴器防护板（Fig. I，编号 1）。
8. 将机械密封从其所在位置中压出并拆卸联轴器（参见“更换机械密封”一章中的“拆卸”以及Fig. I ... VIII）。
9. 松开电机法兰上的电机紧固螺栓（Fig. XXV，编号 1）并用适当的升降装置将驱动装置从水泵上提起 (Fig. XXVII)。
10. 使用合适的升降装置安装新电机，拧紧联接架和电机之间的连接 (Fig. XXVIII)。

注意

执行下列所有作业时，注意为不同螺纹类型规定的拧紧扭矩（参见“拧紧扭矩”表）！

11. 检查联轴器滑动面和电机轴配合面，必要时清洁。
12. 安装联轴器并固定机械密封（参见“更换机械密封”一章中的“安装”以及 Fig. XII ... XXI）。
13. 安装联轴器防护板 (Fig. XXIII)。
14. 连接电机电缆。

始终交叉拧紧螺栓。

螺栓连接			拧紧扭矩
位置	尺寸/强度等级		Nm ± 10%
叶轮 – 轴[1]	M20	A2-70	100
叶轮 – 轴[1]	M18		145
叶轮 – 轴[1]	M24		350
水泵壳体 – 联接架	M16	8.8	100
水泵壳体 – 联接架	M20		170
联接架 – 电机	M16		100
联接架 – 电机	M20		170
联轴器[2]	M10	10.9	60
联轴器[2]	M12		100
联轴器[2]	M14		170
联轴器[2]	M16		230
机械密封 – 轴[3]	M6		7
机械密封 – 联接架	M8	8.8	25
机械密封 – 联接架	M10		35
机械密封 – 联接架	M10		35
保持垫圈 – 叶轮轴	M16		60
保持垫圈 – 电机轴	M20		60
底座 – 水泵壳体	M6		10
底座 – 水泵支脚	M8		25
底座 – 电机	M10		35
支撑块 – 水泵壳体	M12		60
支撑块 – 水泵支脚	M16		100
支撑块 – 电机	M20		170
	M24		350

安装提示：

[1] 使用 Molykote® P37 或类似产品润滑螺纹。

[2] 均匀拧紧螺钉，保持两侧间隙相同。

[3] 分别旋入螺钉并拧紧。

表 *9:* 拧紧扭矩

11 故障、原因、排除方法

警告

只能让有资质的专业人员进行故障排除！注意遵守所有安全说明！

如果无法排除运行故障，请联系专业维修厂或附近的 **Wilo** 客户服务部门或者代理处。

故障	原因	排除方法
水泵不启动或停止。	水泵堵塞。	切断电机电源。排除堵塞原因。如果电机堵塞：检修/更换电机/电机叶轮组。
	机械密封安装错误。	拆卸机械密封，更换损坏的零件，根据说明书安装机械密封。
	电缆端子松动。	检查所有电缆连接。
	电气保险丝损坏。	检查保险丝，更换损坏的保险丝。
	电机损坏。	联系 Wilo 客户服务部门或专业公司检查电机，必要时进行维修。
	电机保护开关触发。	将水泵出口侧调至额定体积流量（见铭牌）。
	电机保护开关错误设置	将电机保护开关设置为正确的额定电流（见铭牌）。
	电机保护开关受到环境温度过高的影响	更换电机保护开关或者用隔热层保护。
	PTC 热敏电阻跳闸单元触发。	检查电机和风扇罩是否脏污，必要时清洁。 检查环境温度，必要时通过强制通风将环境温度设为 ≤ 40 °C。
水泵低功率运行。	旋转方向错误。	检查旋转方向，必要时更改。
	出口侧截止阀节流。	慢慢打开截止阀。
	速度过低	端子跨接错误（用星形代替三角形）。
	吸入管路中有空气	排除法兰泄漏。为水泵排气。如果泄漏明显，则更换机械密封。
水泵发出噪音。	吸入压力不足形成气蚀。	增大吸入压力。注意进水口的最小进流压力。检查吸入侧的滑阀和过滤器，必要时进行清洁。
	机械密封安装错误。	拆卸机械密封，更换损坏的零件，根据说明书安装机械密封。
	电机轴承损坏。	联系 Wilo 客户服务部门或专业公司检查水泵，必要时进行维修。
	叶轮发生摩擦。	检查联接架和电机之间以及联接架和泵壳之间的接触面和定心装置，必要时进行清洁 检查联轴器滑动面和电机轴配合面，必要时清洁并涂抹少许润滑油。

表 *10:* 故障、原因、排除方法

12 备件

只通过专业经销商或 Wilo 客户服务部门购买原装备件。为了避免核实询问和订错货物，每次订购时都请提供水泵和驱动装置铭牌上的所有数据。

小心

物资损失危险！

只有使用原装备件，才能保证水泵的功能。

只能使用 Wilo 原装备件！

订购备件时的必要说明：备件编号、备件名称以及水泵和驱动装置铭牌上的所有数据。这样可以避免再次询问或错误订购。

注意

原装备件清单：参见 Wilo 备件文档。

组件的对应关系参见备件表。

编号	零件	详情	编号	零件	详情
1	更换套件（整套）		1.5	联轴器（整套）	
1.1	叶轮（套件），带有：		2	电机	
1.11		螺母	3	泵壳（套件），带有：	
1.12		张紧盘	1.14		O 形圈
1.13		叶轮	3.1		水泵壳体 (Atmos GIGA-I/-D/-B)
1.14		O 形圈	3.2		转换阀DN 150和 DN 200（仅限 Atmos GIGA-D）
1.2	机械密封（套件），带有：		3.3		测压接口的塞子
1.11		螺母	3.4		排放孔的螺旋塞
1.12		张紧盘	4	用于联接架/泵壳的紧固螺钉	
1.14		O 形圈	5	用于电机/联接架的紧固螺钉	
1.21		机械密封	6	用于电机/联接架固定的螺母	
1.3	联接架（套件），带有：		7	用于电机/联接架固定的垫片	
1.11		螺母			
1.12		张紧盘			
1.14		O 形圈			
1.31		排气阀			
1.32		联轴器罩			
1.33		联接架			
1.4	联轴器/轴（套件），带有：				
1.11		螺母			
1.12		张紧盘			
1.14		O 形圈			
1.41		整套联轴器/轴			
1.42		卡紧环			

表 *11:* 备件表

13 废弃处置

13.1 油和润滑剂

工作介质必须被收集到一个适当的容器中，并根据当地现行的指令废弃处置。一旦有介质滴落，立刻进行收集！

13.2 关于收集损耗的电气产品和电子产品的相关信息

按规定废弃处置和正确回收这些产品，能避免环境污染、保护人身健康。

注意

禁止作为生活垃圾废弃处置！

在欧盟地区，该标志张贴在产品、包装或随附的资料中。它的意思是，相关的电气和电子产品不得作为生活垃圾废弃处置。

在按规定处理、回收和废弃处置相关旧产品时，要注意以下几点：

- 这些产品只能交给专门为此设立且获得认证的垃圾处理场。
- 注意当地现行的规定！

有关按规定废弃处置的信息，请咨询当地社区、最近的垃圾处理场或您购买产品的经销商。关于回收的详细信息请访问www.wilo-recycling.com。

保留技术变更权利！

Table of contents

1 General information ... 42
1.1 About these instructions ... 42
1.2 Copyright ... 42
1.3 Subject to change ... 42

2 Safety ... 42
2.1 Identification of safety instructions ... 42
2.2 Personnel qualifications ... 43
2.3 Electrical work ... 43
2.4 Transport ... 44
2.5 Installing/dismantling ... 44
2.6 During operation ... 45
2.7 Maintenance work ... 45
2.8 Operator responsibilities ... 46

3 Transport and storage ... 46
3.1 Shipping ... 46
3.2 Transport inspection ... 46
3.3 Storage ... 47
3.4 Transport for installation/dismantling purposes ... 48

4 Intended use and misuse ... 49
4.1 Intended use ... 49
4.2 Misuse ... 49

5 Product information ... 50
5.1 Type key ... 50
5.2 Technical data ... 50
5.3 Scope of delivery ... 52
5.4 Accessories ... 52

6 Description of the pump ... 52
6.1 Anticipated noise levels ... 53

7 Installation ... 53
7.1 Personnel qualifications ... 53
7.2 Operator responsibilities ... 53
7.3 Safety ... 54
7.4 Permissible forces and torques on the pump flanges ... 55
7.5 Preparing the installation ... 56

8 Electrical connection ... 60
8.1 Anti-condensation heater ... 62

9 Commissioning ... 63
9.1 Initial commissioning ... 63
9.2 Filling and venting ... 63
9.3 Activation ... 64
9.4 Switching off ... 65
9.5 Operation ... 65

10 Maintenance ... 66
10.1 Air supply ... 67
10.2 Maintenance work ... 67

11 Faults, causes and remedies ... 71

12 Spare parts ... 73

13 Disposal ... 74
13.1 Oils and lubricants ... 74
13.2 Information on the collection of used electrical and electronic products ... 74

1 General information

1.1 About these instructions

These installation and operating instructions are an integral part of the device. Read these instructions before commencing any work and keep them in an accessible place at all times. Strict adherence to these instructions is a requirement for the intended use and correct operation of the product.
All specifications and markings on the device must be observed. These installation and operating instructions correspond to the relevant version of the device and the underlying safety standards valid at the time of going to print.

The language of the original operating instructions is German. All other languages of these instructions are translations of the original operating instructions.

1.2 Copyright

WILO SE © 2023

The reproduction, distribution and utilisation of this document in addition to communication of its contents to others without express authorisation is prohibited. Offenders will be held liable for payment of damages. All rights reserved.

1.3 Subject to change

Wilo shall reserve the right to change the listed data without notice and shall not be liable for technical inaccuracies and/or omissions. The illustrations used may differ from the original and are intended as an exemplary representation of the product.

2 Safety

This chapter contains basic instructions for the individual life cycles of the product. Failure to observe this information carries the following risks:

- Danger to persons from electrical, mechanical and bacteriological effects as well as electromagnetic fields
- Environmental damage from discharge of hazardous substances
- Damage to property
- Failure of important product functions
- Failure of required maintenance and repair procedures

Failure to observe the instructions will result in the loss of any claims for damages.

The directions and safety instructions in the other sections must also be observed!

2.1 Identification of safety instructions

These installation and operating instructions set out safety instructions for preventing personal injury and damage to property, which are displayed in different ways:

- Safety instructions relating to personal injury start with a signal word and are **preceded by a corresponding symbol**.
- Safety instructions relating to property damage start with a signal word and are displayed **without** a symbol.

Signal words

- **DANGER!**
  Failure to follow the instructions will result in serious injury or death!
- **Warning!**
  Failure to follow instructions can lead to (serious) injury!

- **Caution!**
  Failure to follow instructions can lead to property damage and possible total loss.
- **Notice!**
  Useful information on handling the product

Symbols

These instructions use the following symbols:

General danger symbol

Danger of electric voltage

Warning of hot surfaces

Warning of high pressure

Notices

2.2 Personnel qualifications

Staff must:

- be instructed about locally applicable regulations governing accident prevention,
- have read and understood the installation and operating instructions.

Personnel must have the following qualifications:

- Electrical work: a qualified electrician must carry out the electrical work.
- Installation/dismantling: The technician must be trained in the use of the necessary tools and fixation materials.
- The product must be operated by persons who have been instructed on how the complete system functions.
- Maintenance work: The technician must be familiar with the use of operating fluids and their disposal.

Definition of “qualified electrician”

A qualified electrician is a person with appropriate technical education, knowledge and experience who can identify **and** prevent electrical hazards.

The operator must confirm and ensure the field of authority, the competence and the monitoring of the personnel. If the personnel do not possess the necessary knowledge, they must be trained and instructed. If required, this can be carried out by the product manufacturer at the operator’s request.

2.3 Electrical work

- Have electrical work carried out by a qualified electrician.
- When connecting to the mains supply, comply with the nationally applicable guidelines, standards and regulations as well as specifications issued by the local energy supply companies.

- Before commencing work, disconnect the product from the mains and secure it against being switched on again.
- Give staff training on how to establish the electrical connection and the methods for switching off the product.
- Protect the electrical connection with a residual-current device (RCD).
- Observe the technical information in these installation and operating instructions as well as on the rating plate.
- Earth the product.
- Comply with the manufacturer's specifications when connecting the product to electrical switching systems.
- Have a defective connection cable replaced immediately by a qualified electrician.
- Never remove operating elements.
- Comply with the specifications on electromagnetic compatibility when using electronic start-up controllers (e.g. soft starter or frequency converter). If required, consider special measures (shielded cables, filters, etc.).

2.4 Transport

- Wear protective equipment:
  - Safety gloves for protection against cuts
  - Safety shoes
  - Sealed safety glasses
  - Safety helmet (when using lifting equipment)
- Only use legally specified and approved lifting slings.
- Select the lifting sling based on the prevailing conditions (weather, slinging point, load etc.).
- Always attach the lifting sling to the designated slinging points (lifting eyes).
- Position the lifting accessory in a way that ensures stability during use.
- When using lifting equipment, a second person must be present to coordinate the procedure if required (e.g. if the operator's field of vision is blocked).
- Persons must not stand underneath suspended loads. Do **not** move suspended loads over workplaces where people are present.

2.5 Installing/dismantling

- Wear protective equipment:
  - Safety shoes
  - Safety gloves for protection against cuts
  - Safety helmet (when using lifting equipment)
- Locally applicable laws and regulations on work safety and accident prevention must be complied with.

- The procedure described in the installation and operating instructions for shutting down the product/unit must be strictly observed.
- Disconnect the device from the mains and secure it against being switched on again without authorisation.
- All rotating parts must be at a standstill.
- Close the gate valve in the inlet and in the discharge line.
- Provide adequate aeration in enclosed spaces.
- Make sure that there is no risk of explosion when carrying out any type of welding work or work with electrical devices.

2.6 During operation

- The operator must immediately notify the person in charge of every fault or irregularity.
- If hazardous defects occur, the operator must immediately deactivate the device. Hazardous defects include:
  - Malfunction of safety and monitoring devices
  - Damage to housing parts
  - Damage to electrical equipment
- Collect any leakage of fluids and operating fluids immediately and dispose of it according to the locally applicable guidelines.
- Tools and other objects should only be kept in their designated places.

2.7 Maintenance work

- Wear protective equipment:
  - Sealed safety glasses
  - Safety shoes
  - Safety gloves for protection against cuts
- Locally applicable laws and regulations on work safety and accident prevention must be complied with.
- The procedure described in the installation and operating instructions for shutting down the product/unit must be strictly observed.
- Only perform the maintenance work described in these installation and operating instructions.
- Only original parts from the manufacturer may be used for maintenance and repairs. The use of any non-original parts releases the manufacturer from any liability.
- Disconnect the device from the mains and secure it against being switched on again without authorisation.
- All rotating parts must be at a standstill.
- Close the gate valve in the inlet and in the discharge line.
- Collect any leakage of fluid and operating fluid immediately and dispose of it according to the locally applicable guidelines.
- Store tools at the designated locations.
- After completing work, reattach all safety and monitoring devices and check that they function properly.

2.8 Operator responsibilities

- Provide installation and operating instructions in a language which the personnel can understand.
- Make sure that personnel are suitably trained for the specified work.
- Verify the area of responsibility and individual responsibilities of personnel.
- Provide the necessary protective equipment and make sure that personnel wear it.
- Ensure that safety and information signs mounted on the device are always legible.
- Train personnel with regard to the operating principles of the system.
- Eliminate risks from electrical current.
- Equip hazardous components (extremely cold, extremely hot, rotating, etc.) with a guard to be provided by the customer.
- Remove leakages of hazardous fluids (e.g. explosive, toxic or hot) in such a way that no danger is posed to persons or the environment. Comply with national statutory provisions.
- Keep highly flammable materials at a safe distance from the product.
- Ensure compliance with the regulations for accident prevention.
- Ensure compliance with local directives or general directives [e.g. IEC, VDE, etc.] and instructions from local energy supply companies.

Follow all information that appears on the product and ensure that it remains permanently legible:

- Warning and hazard notices
- Rating plate
- Direction of rotation arrow/symbol for direction of flow
- Labelling of connections

This device can be used by children from 8 years of age as well as people with reduced physical, sensory or mental capacities or lack of experience and knowledge if they are supervised or instructed on the safe use of the device and they understand the dangers that can occur. Children are not allowed to play with the device. Cleaning and user maintenance must not be carried out by children without supervision.

3 Transport and storage

3.1 Shipping

The pump is secured to a pallet ex works, packaged in a box and protected against dirt and moisture.

3.2 Transport inspection

Check delivery immediately for damage and completeness. Defects must be noted on the freight documentation! Defects must be notified to the transport company or the manufacturer immediately on the day of receipt of shipment. Subsequently notified defects can no longer be claimed for.

Only remove the outer packaging at the place of utilisation to ensure that the pump is not damaged during transport.

3.3 Storage

CAUTION

Damage due to incorrect handling during transport and storage!

Protect the product from moisture, frost and mechanical damage during transport and temporary storage.

If available, leave the covers on the pipe connections so that no dirt and other foreign matter can get into the pump housing.

To avoid scoring at the bearings and sticking, turn the pump shaft once a week using a socket wrench.

If a longer storage time is required, contact Wilo for preservation measures.

WARNING

Risk of injury due to incorrect transport!

If the pump is transported again at a later date, it must be packaged so that it cannot be damaged during transport. Use the original packaging for this or choose equivalent packaging.

3.4 Transport for installation/dismantling purposes

WARNING

Risk of personal injury!

Incorrect transport can lead to personal injury!

- Unload boxes, lathed spaces, pallets or cartons, depending on the size and construction, with forklift trucks or with slings.
- Always lift heavy parts of more than 30 kg with hoisting gear that is in accordance with local regulations.
  - The bearing capacity has to be adapted to the weight!
- Transport the pump using approved lifting gear (block and tackle, crane etc.). Lifting gear must be attached to the pump flanges and, if necessary, to the outer motor diameter.
  - Securing against slipping is required for this!
- When lifting machines or parts with eyelets, only use load hooks or shackles that are in accordance with local safety regulations.
- The transport lugs on the motor are only for transporting the motor. They are not approved for transporting the complete pump.
- If load chains or ropes are put over sharp edges, a guard has to be used or they have to be put through the eyelets.
- When using a block and tackle or similar hoisting gear, make sure that the load is lifted vertically.
- Prevent the suspended load from swinging.
  - Swinging can be avoided by using a second block and tackle. The direction of pull of both block and tackles must be less than 30° to the vertical.
- Never subject load hooks, eyelets or shackles to bending forces – their load axes have to be in the direction of the tractive forces!
- When lifting, make sure that the load limit of a load rope is reduced for diagonal pulling.
  - The safety and effectiveness of a stranding is best ensured when all load-bearing elements are loaded in the vertical direction to the greatest extent possible. If required, use a lifting arm which can be attached vertically to the load rope.
- Set up a safety zone in such a way that there is no danger if the load or a part of the load slips or the hoisting gear breaks or tears.
- Never leave a load longer than necessary in a suspended position! Ensure there is no danger to personnel when accelerating and slowing down during the lifting procedure.

For lifting with a crane, the pump must be supported by suitable belts or load ropes, as shown. Place belts or load ropes in loops around the pump, which tighten from the pump's own net weight.

The transport lugs on the motor are only for guiding when the load is being carried!

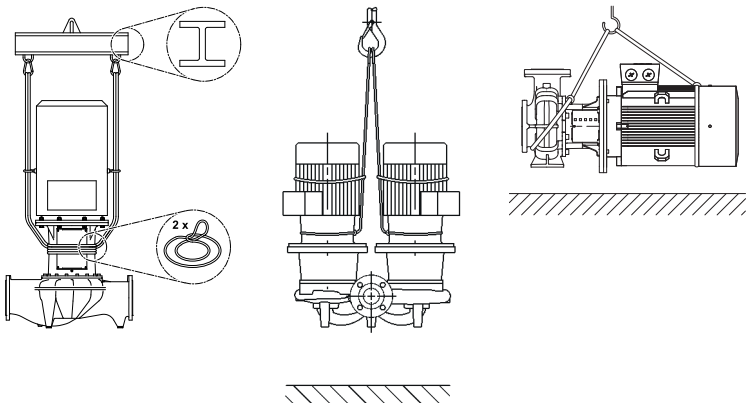

WARNING

Damaged transport lugs can break off and cause considerable personal injury.

- Check the transport lugs before use for damage and secure fixation.

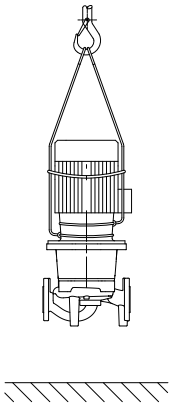

Transporting the pump

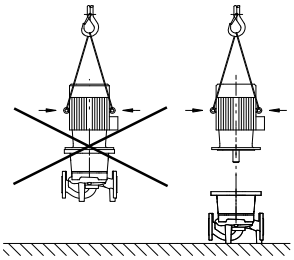

Transporting the motor

The transport lugs on the motor are only for transporting the motor, but are not authorised for transporting the complete pump!

DANGER

Danger of death from falling parts!

The pump itself and pump parts can have a very high net weight. Falling parts pose a risk of cuts, crush injuries, bruises or impacts, which can be fatal.

- Always use suitable lifting accessories and secure parts against falling.
- Never stand below a suspended load.
- During storage and transport, as well as before all installation and assembly work, ensure that the pump is in a safe position and standing securely.

WARNING

Personal injury due to unsecured installation of the pump!

The base with the threaded holes is used for fixation only. When standing freely, the pump might not be sufficiently stable.

- Never place the pump unsecured on the pump support feet.

4 Intended use and misuse

4.1 Intended use

The glanded pumps of the Atmos GIGA-I (in-line single pump), Atmos GIGA-D (in-line twin-head pump) and Atmos GIGA-B (monobloc pump) series are intended for use as circulators in building services.

They may be used for:

- Hot-water heating systems
- Cooling and cold water circulation systems
- Process water systems
- Industrial circulation systems
- Heat carrier circuits

Intended use includes compliance with these instructions as well as the information and markings on the pump.
Any use beyond the intended use is considered misuse and will result in the loss of all liability claims.

4.2 Misuse

The operational reliability of the supplied product is only guaranteed for intended use in accordance with chapter "Intended use" of the installation and operating instructions. The

limit values must not fall below or exceed those values specified in the catalogue/data sheet.

WARNING! Misuse of the pump can lead to dangerous situations and damage.

- Never use fluids other than those approved by the manufacturer.
- Non-permitted substances in the fluid can destroy the pump. Abrasive solids (e.g. sand) increase pump wear.
- Pumps without an Ex rating are not suitable for use in potentially explosive atmospheres.
- Highly flammable materials/fluids should always be kept at a safe distance from the device.
- Never allow unauthorised persons to carry out work.
- Never operate the pump beyond the specified limits of use.
- Never carry out unauthorised conversions.
- Use authorised accessories and genuine spare parts only.

Typical installation locations are technical rooms within the building with other domestic installations. No provision has been made for direct installation of the pump in rooms used for other purposes (residential and work rooms).

Outdoor installation requires a corresponding, special version (motor with anti-condensation heater). See chapter “Anti-condensation heater connection”.

5 Product information

5.1 Type key

Example:	
Atmos GIGA-I 250/420-110/4 **Atmos GIGA-D 150/315-45/4** **Atmos GIGA-B 125/315-45/4/6**	
Atmos GIGA-I Atmos GIGA-D Atmos GIGA-B	Flange-end pump as in-line single pump Flange-end pump as in-line twin-head pump Flange-end pump as monobloc pump
250	Nominal diameter DN of the flange connection in mm (with Atmos GIGA-B: discharge side)
420	Impeller nominal diameter in mm
110	Rated power P2 in kW
4	Number of poles, motor
6	60 Hz version

Table 1: Type key

5.2 Technical data

Property	Value	Note
Rated speed	Version 50 Hz: • Atmos GIGA-I/-D/-B (2-/4-pole): 2900 rpm or 1450 rpm	Depending on pump type
Rated speed	Version 60 Hz: • Atmos GIGA-I/-B (2-/4-pole): 3500 rpm or 1750 rpm	Depending on pump type
Nominal diameters DN	Atmos GIGA-I: 32 to 250 mm Atmos GIGA-D: 32 ... 200 mm Atmos GIGA-B: 32 ... 150 mm (discharge side)	

Property	Value	Note
Pipe and pressure measurement connections	Flanges PN 16 in accordance with DIN EN 1092-2 with pressure measurement connections Rp ⅛ in accordance with DIN 3858. Partially PN 25, depending on the pump type	
Permissible min./max. fluid temperature	-20 °C ... +140 °C	Depending on fluid and operating pressure (lower temperatures partly on request as special version)
Ambient temperature during operation min./max.	0 °C ... +40 °C	Lower or higher ambient temperatures on request
Temperature during storage min./max.	-30 °C ... +60 °C	
Max. permissible operating pressure	Up to DN 200: 16 bar (up to + 120 °C) 13 bar (up to + 140 °C) (Version to -P4: 25 bar) DN 250: 16 bar (up to + 140 °C)	Version ... -P4 (25 bar) as special version at additional charge (availability depends on the pump type)
Insulation class	F	
Protection class	IP55	
Permissible fluids	Heating water in accordance with VDI 2035 part 1 and part 2 process water cooling/chilled water water-glycol mixture up to 40 % vol.	Standard version Standard version Standard version Standard version
Permissible fluids	Heat carrier oil	Special version or auxiliary equipment (at additional charge)
Permissible fluids	Other fluids (on request)	Special version or auxiliary equipment (at additional charge)
Electrical connection	3~400 V, 50 Hz	Standard version (50 Hz version)
Electrical connection	3~380 V, 60 Hz	Partially standard version (60 Hz version)
Special voltage/frequency	Pumps with motors with different voltages or other frequencies are available on request.	Special version or auxiliary equipment (at additional charge)
PTC thermistor sensor	Standard version from 5.5 kW	Other motor power at additional charge
Speed control, pole switchover	Wilo control devices (e.g. Wilo-CC-HVAC system)	Standard version
Speed control, pole switchover	Pole switchover	Special version or auxiliary equipment (at additional charge)

Table 2: Technical data

The detailed motor data as per EU2019/1781 can be consulted via the motor's article number here: https://qr.wilo.com/motors

Additional information CH	Permissible fluids
Heating pumps	Heating water (in accordance with VDI 2035/VdTÜV Tch 1466/**CH: in accordance with SWKI BT 102-01)** ... No oxygen binding agents, no chemical sealants (ensure closed system from corrosion perspective according to VDI 2035 **(CH: SWKI BT 102-01)**; rework leaky points).

Fluids

Water-glycol mixtures or fluids with a different viscosity than pure water increase the power consumption of the pump. Only use mixtures with corrosion protection. **Observe the relevant manufacturer's specifications!**

- Adjust the motor power if required.
- The fluid must be sediment-free.
- Wilo's approval must be obtained for the use of other fluids.
- When using water-glycol mixtures, the use of an S1 variant with a corresponding mechanical seal is generally recommended.
- The compatibility of the standard seal/standard mechanical seal with the fluid is generally given under normal system conditions.
  Special circumstances may require special seals, for example:
  - solids, oils or EPDM-attacking substances in the fluid,
  - air content in the system, etc.

Observe the safety data sheet for the fluid to be pumped!

5.3 Scope of delivery

- Pump
  (Atmos GIGA-I 250 including mounting foot for installation and foundation fixation)
- Installation and operating instructions

5.4 Accessories

Accessories must be ordered separately:

Atmos GIGA-I/-D/-B:

- PTC thermistor tripping unit for switch cabinet installation

Atmos GIGA-I/-D:

- 3 mounting brackets with fixation material for installation on a base

Atmos GIGA-D:

- Blind flanges for repair work

Atmos GIGA-B:

- Supports for installation on a base or baseplate for rated powers of 5.5 kW and higher

For a detailed list, consult the catalogue and spare parts documentation.

6 Description of the pump

All the pumps described here are low-pressure centrifugal pumps in compact construction design with a coupled motor. The mechanical seal is maintenance-free. The pumps can be installed both directly as a pipe installation pump in a sufficiently anchored pipe or placed on a foundation base.
The installation options depend on the pump size. Suitable Wilo control devices (e.g. Wilo-CC-HVAC system) can control the power of the pumps continuously. This allows optimisation of the pump output for the demands of the installation and economically efficient pump operation.

Version Atmos GIGA-I

The pump housing has an in-line design, i.e. the flanges on the suction and discharge sides lie along a centre line. All pump housings are provided with pump support feet. Installation on a foundation base is recommended for rated powers of 5.5 kW and higher.

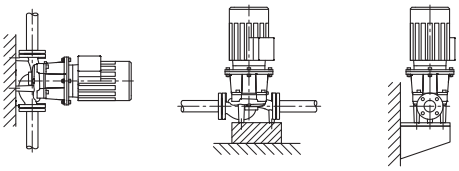

Fig. 1: View Atmos GIGA-I

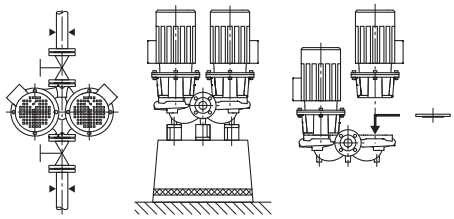

Fig. 2: View Atmos GIGA-D

Version Atmos GIGA-D

Two pumps are arranged in a shared housing (twin-head pump). The pump housing has an in-line design. All pump housings are provided with pump support feet. Installation on a foundation base is recommended for rated powers of 4 kW and higher.

Only the base-load pump is operated in control mode in connection with a control device. The second pump is available to fulfil full load operation requirements as an auxiliary peak load. The second pump can adopt the reserve function in the event of a fault.

NOTICE

Blind flanges (accessories) are available for all pump types/housing sizes of the Atmos GIGA-D series. When replacing the motor impeller unit (motor with impeller and terminal box), a drive can therefore remain in operation.

NOTICE

To ensure the standby pump is ready for operation, operate the standby pump every 24 h at least once a week.

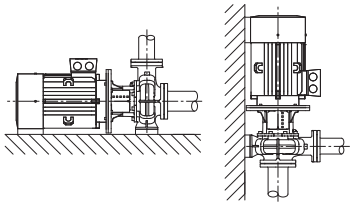

Fig. 3: View Atmos GIGA-B

Version Atmos GIGA-B

Spiral housing pump with dimensions in accordance with DIN EN 733.

Pump with cast feet on the pump housing. From 5.5 kW motor power: Motors with cast or screwed-on feet.

Installation on a foundation base is recommended for rated powers of 5.5 kW and higher.

6.1 Anticipated noise levels

Motor power [kW]	Measuring surface sound-pressure level Lp, A [dB(A)] [1]	
	2900 rpm	1450 rpm
	Atmos GIGA-I/-D/-B	Atmos GIGA-I/-D/-B
37	77	70
45	72	72
55	77	74
75	77	74
90	77	72
110	79	72
132	79	72
160	79	74
200	79	75
250	85	-

[1] Spatial mean value of sound-pressure levels on a square measuring surface at a distance of 1 m from the surface of the motor

Table 3: Anticipated noise levels (50 Hz)

7 Installation

7.1 Personnel qualifications

- Installation/dismantling: The technician must be trained in the use of the necessary tools and fixation materials.

7.2 Operator responsibilities

- Observe national and regional regulations!
- Observe locally applicable accident prevention and safety regulations of professional and trade associations.

- Provide protective equipment and ensure that the protective equipment is worn by personnel.
- Observe all regulations for working with heavy loads.

7.3 Safety

DANGER

Danger of death due to lack of protective devices!

Due to missing protective devices of the terminal box or near the coupling/motor, electric shock or contact with rotating parts can lead to life-threatening injuries.

- Before commissioning, safety devices such as coupling covers that were removed must be reinstalled!

DANGER

Danger of death from falling parts!

The pump itself and pump parts can have a very high net weight. Falling parts pose a risk of cuts, crush injuries, bruises or impacts, which can be fatal.

- Always use suitable lifting accessories and secure parts against falling.
- Never stand below a suspended load.
- During storage and transport, as well as before all installation and assembly work, ensure that the pump is in a safe position and standing securely.

WARNING

Hot surface!

The entire pump can become very hot. There is a risk of burns!

- Allow the pump to cool down before commencing any work!

WARNING

Risk of scalding!

At high fluid temperatures and system pressures, allow the pump to cool down first and then depressurise the system.

CAUTION

Damage to the pump due to overheating!

The pump must not be allowed to run dry for more than 1 minute. Dry running causes a build-up of energy in the pump, which can damage the shaft, impeller, and mechanical seal.

- Make sure that the volume flow does not fall below the minimum value Q_{min}.

Calculation of Q_{min}:

$Q_{min} = 10\ \% \times Q_{max\ pump}$

7.4 Permissible forces and torques on the pump flanges

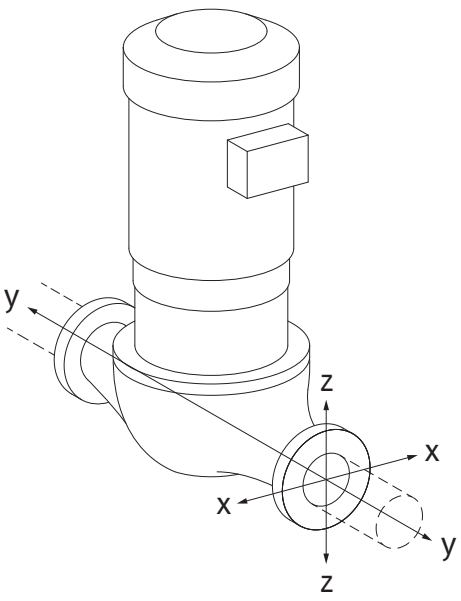

Fig. 4: Load case 16A, EN ISO 5199, Appendix B

Pump suspended in pipe, case 16A

DN	Forces F [N]				Torques M [Nm]			
	F_X	F_Y	F_Z	Σ Forces F	M_X	M_Y	M_Z	Σ Torques M
Discharge and suction flange								
32	450	525	425	825	550	375	425	800
40	550	625	500	975	650	450	525	950
50	750	825	675	1300	700	500	575	1025
65	925	1050	850	1650	750	550	600	1100
80	1125	1250	1025	1975	800	575	650	1175
100	1500	1675	1350	2625	875	625	725	1300
125	1775	1975	1600	3100	1050	750	950	1525
150	2250	2500	2025	3925	1250	875	1025	1825
200	3000	3350	2700	5225	1625	1150	1325	2400
250	3725	4175	3375	6525	2225	1575	1825	3275
Values in acc. with ISO/DIN 5199 – class II (2002) – Appendix B								

Table 4: Permissible forces and torques on pump flanges in vertical pipe

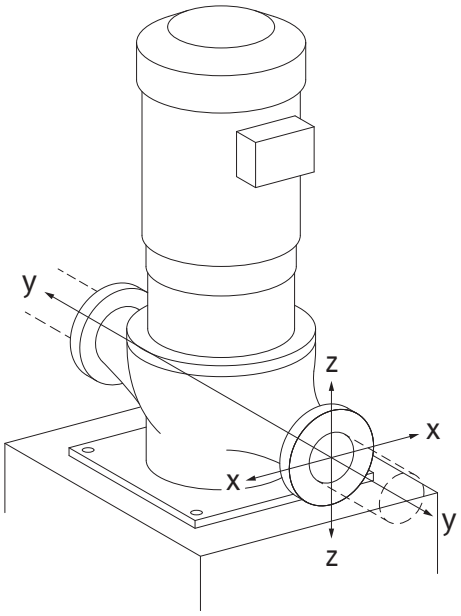

Fig. 5: Load case 17A, EN ISO 5199, Appendix B

Vertical pump on pump feet, case 17A

DN	Forces F [N]				Torques M [Nm]			
	F_X	F_Y	F_Z	Σ Forces F	M_X	M_Y	M_Z	Σ Torques M
Discharge and suction flange								
32	338	394	319	619	300	125	175	550
40	413	469	375	731	400	200	275	700
50	563	619	506	975	450	250	325	775
65	694	788	638	1238	500	300	350	850
80	844	938	769	1481	550	325	400	925
100	1125	1256	1013	1969	625	375	475	1050
125	1331	1481	1200	2325	800	500	700	1275
150	1688	1875	1519	2944	1000	625	775	1575
200	2250	2513	2025	3919	1375	900	1075	2150
250	2794	3131	2531	4894	1975	1325	1575	3025
Values in acc. with ISO/DIN 5199 – class II (2002) – Appendix B								

Table 5: Permissible forces and torques on pump flanges in horizontal pipe

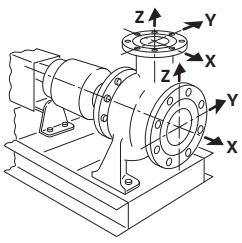

Fig. 6: Load case 1A

Horizontal pump, axial connector x-axis, case 1A

DN	Forces F [N]				Torques M [Nm]			
	F_X	F_Y	F_Z	Σ Forces F	M_X	M_Y	M_Z	Σ Torques M
Suction flange								
50	578	525	473	910	490	350	403	718
65	735	648	595	1155	525	385	420	770
80	875	788	718	1383	560	403	455	823
100	1173	1050	945	1838	613	438	508	910
125	1383	1243	1120	2170	735	525	665	1068
150	1750	1575	1418	2748	875	613	718	1278
200	2345	2100	1890	3658	1138	805	928	1680

DN	Forces F [N]				Torques M [Nm]			
	F_X	F_Y	F_Z	Σ Forces F	M_X	M_Y	M_Z	Σ Torques M
Values in acc. with ISO/DIN 5199 – class II (2002) – Appendix B								

Table 6: Permissible forces and torques on pump flanges

Horizontal pump, top connector z-axis, case 1A

DN	Forces F [N]				Torques M [Nm]			
	F_X	F_Y	F_Z	Σ Forces F	M_X	M_Y	M_Z	Σ Torques M
Pressure flange								
32	315	298	368	578	385	263	298	560
40	385	350	438	683	455	315	368	665
50	525	473	578	910	490	350	403	718
65	648	595	735	1155	525	385	420	770
80	788	718	875	1383	560	403	455	823
100	1050	945	1173	1838	613	438	508	910
125	1243	1120	1383	2170	735	525	665	1068
150	1575	1418	1750	2748	875	613	718	1278
Values in acc. with ISO/DIN 5199 – class II (2002) – Appendix B								

Table 7: Permissible forces and torques on pump flanges

If not all working loads reach the maximum permitted values, one of these loads may exceed the normal limit value. Provided that the following additional conditions are fulfilled:

- All force and torque components are limited to 1.4 times the maximum permitted value.
- The forces and torques acting on each flange meet the requirements of the compensation equation.

$$\left(\frac{\sum|F|_{\text{effective}}}{\sum|F|_{\text{max. permitted}}}\right)^2 + \left(\frac{\sum|M|_{\text{effective}}}{\sum|M|_{\text{max. permitted}}}\right)^2 \leq 2$$

Fig. 7: Compensation equation

$\Sigma F_{effective}$ and $\Sigma M_{effective}$ are the arithmetic sums of the effective values of both pump flanges (inlet and outlet). $\Sigma F_{max.\ permitted}$ and $\Sigma M_{max.\ permitted}$ are the arithmetic sums of the maximum permitted values of both pump flanges (inlet and outlet). The algebraic signs of Σ F and Σ M are not taken into consideration in the compensation equation.

Influence of material and temperature

The maximum permissible forces and torques apply for the grey cast iron base material and for an initial temperature value of 20 °C.
For higher temperatures, the values must be corrected as follows depending on the ratio of their modulus of elasticity:

$E_{t,\ EN\text{-}GJL} / E_{20,\ EN\text{-}GJL}$

$E_{t,\ EN\text{-}GJL}$ = Modulus of elasticity grey cast iron at the selected temperature

$E_{20,\ EN\text{-}GJL}$ = Modulus of elasticity grey cast iron at 20 °C

7.5 Preparing the installation

Check whether the pump complies with the specifications on the delivery note; report any damage or missing parts to Wilo immediately. Check slatted crates/boxes/wrapping for spare parts or accessories that could be included with the pump.

WARNING

Risk of personal injury and property damage due to improper handling!

- Install only after completion of all welding and soldering work and after the pipeline system has been flushed, if required.
  - Dirt can cause the pump to fail.

Installation location

- The pump must be protected from the weather and installed in a frost-/dust-free, well ventilated, oscillation-isolated environment that is not potentially explosive. The pump must not be installed outdoors! Observe the specifications in “Intended use” section!
- Mount the pump in a readily accessible place. This makes it easier to complete inspections, maintenance (e.g. mechanical seal change) or replacement in the future. Observe the minimum axial distance between the wall and the fan cover of the motor: free removal dimension of at least 200 mm + diameter of the fan cover.
- Install a device for attaching hoisting gear above the set-up site of the pumps. Total weight of the pump: see catalogue or data sheet.

Base

CAUTION

A faulty foundation or incorrect installation of the unit!

A faulty foundation or incorrect installation of the unit on the foundation can lead to defects of the pump.

• These defects are not covered by the warranty.

• Never set up the pump unit on unfortified surfaces or surfaces that cannot bear loads.

NOTICE

For some pump types, simultaneous separation of the foundation block itself from the building structure by means of an elastic intermediate layer (e.g. cork or MAFUND® plate) is required for vibration-insulated installation.

WARNING

Personal injury and property damage due to improper handling!

Transport lugs mounted on the motor housing can tear out if the load is too heavy. This can lead to serious injuries and damage to the product!

- Only lift the pump with approved lifting gear (e.g. block and tackle, crane). See also chapter “Transport and storage”.
- Transport lugs mounted on the motor housing are only permitted for transporting the motor!

NOTICE

Simplify subsequent work on the unit!

- To ensure the entire unit does not have to be emptied, install shut-off valves upstream and downstream of the pump.

If need be, the necessary non-return valves are to be provided.

Condensate drainage

- When using the pump in air conditioning or cooling systems:
  The condensate that forms in the lantern can be drained specifically via an existing drilled hole. A drain pipe can also be connected to this opening and a small amount of escaping liquid can be drained off.
- The air vent valve (Fig. XXIX/XXX/XXXII, Item 1.31) must always face upwards.

Installation positions

Atmos GIGA-I/-D

Permitted/impermissible installation positions

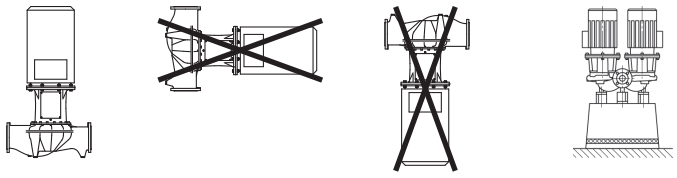

- Installation position:
  Only vertical installation is permitted.

Atmos GIGA-B

Permissible installation positions

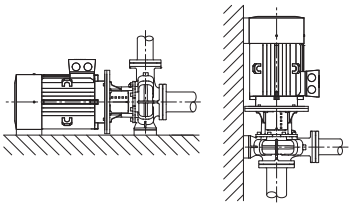

NOTICE

Install monobloc pumps of the Atmos GIGA-B series on adequate foundations or mounting brackets (Fig. 3).
The motor must be supported from a motor power of 18.5 kW. (See installation examples Atmos GIGA-B).

Pump housing and motor must be installed underneath. Suitable supports from the Wilo accessories range can be used for this purpose.

When installing the motor in a vertical position, the pump housing foot and motor housing foot must be screwed on. This must be done stress-free.

Unevenness between motor and pump housing feet must be levelled out for stress-free installation.

NOTICE

The motor terminal box must not face downward. If necessary, the motor or motor impeller unit can be rotated once the hexagon head screws have been loosened. While rotating the motor or motor impeller unit, ensure that the housing O-ring seal is not damaged.

Installation examples Atmos GIGA-B:

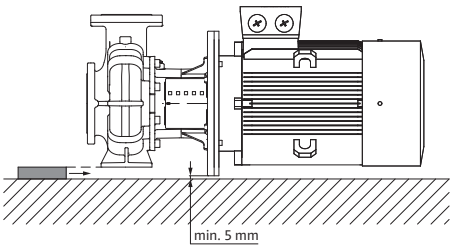

Pump housing supported

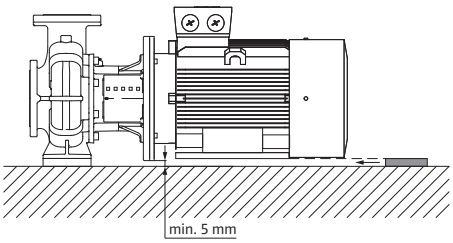

Motor supported

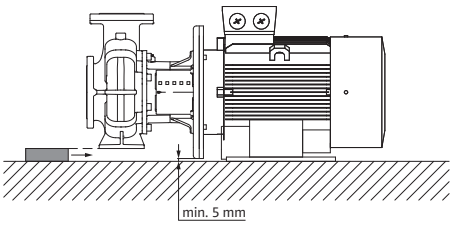

Pump housing supported, motor attached to the base

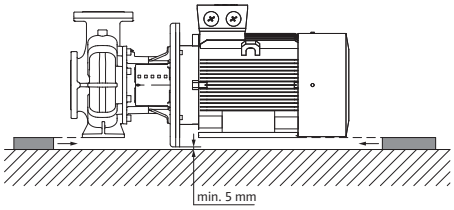

Pump housing and motor supported

NOTICE

When pumping from an open tank (e.g. cooling tower), ensure that there is always a sufficient liquid level above the pump's suction port. This prevents the pump from running dry. The minimum inlet pressure must be observed.

NOTICE

In the case of insulated systems, only the pump housing may be insulated. Never insulate the lantern and motor.

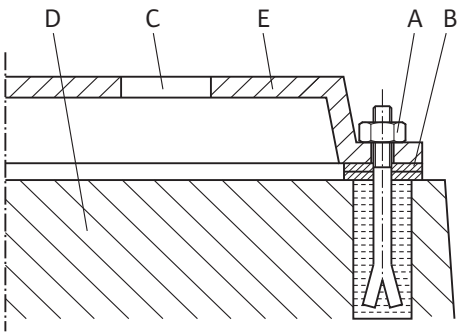

Fig. 8: Example of a foundation screwed connection

Example of a foundation screwed connection

- Align the complete unit when installing it on the foundation with the help of the spirit level (at the shaft/discharge port).
- Always put the washers (B) to the left and right directly at the fixation material (e.g. stone bolts (A)) between the baseplate (E) and foundation (D).
- Evenly and firmly tighten the fixation material.
- For distances > 0.75 m, support the baseplate at the centre between the fixation elements.

Connection of the pipes

CAUTION

Risk of damage due to incorrect handling!

The pump may never be used as a fixed point for the pipe.

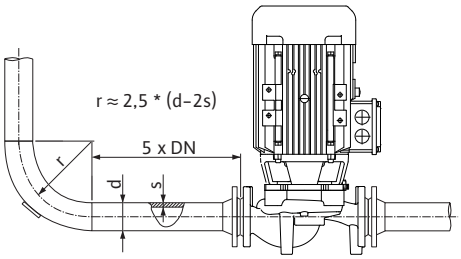

Fig. 9: Settling section upstream and downstream of the pump

- The present NPSH of the system always has to be greater than the required NPSH of the pump.
- The forces and torques being exerted by the pipeline system on the pump flange (e.g., by warping, thermal expansion) may not exceed the permitted forces and torques.
- The pipes and pump must be free of mechanical stress when installed.
- The pipes must be fixed in such a way that the pump does not have to support the weight of the pipes.
- The suction line is to be kept as short as possible. Lay the suction line to the pump so that it continuously rises while the inlet falls. Avoid possible air entry points.
- If a dirt trap in the suction line is required, its free cross-section has to be 3 – 4 times the cross-section of the pipe.
- For short pipes, the nominal diameters must be at least those of the pump connections. For long pipes, determine the most economical nominal diameter in each case.
- To avoid higher pressure losses, make adapters for larger nominal diameters with an extension angle of approx. 8.

NOTICE

Avoid flow cavitation!

- A settling section must be provided upstream and downstream of the pump in the form of a straight pipe. The length of the settling section must be at least 5 times the nominal diameter of the pump flange.

- Remove the flange covers at the suction and discharge ports of the pump before attaching the piping.

Final check

Check the alignment of the unit again according to the “Installation” section.

- Tighten the foundation bolts if necessary.
- Check all connections for correctness and function.
- It must be possible to turn the coupling/shaft by hand.

Do not allow the coupling/shaft to turn:

- Release the coupling and re-tighten with the prescribed torque.

In case this measure is not successful:

- Remove the motor (see “Changing the motor” section).
- Clean the motor centring and flange.
- Reinstall the motor.

8 Electrical connection

DANGER

Risk of fatal injury due to electrical current!

The use of a thermal overload protection is recommended!

Improper conduct when carrying out electrical work can lead to death due to electric shock!

- Electrical connection may only be carried out by a qualified electrician and in accordance with the applicable regulations!
- Adhere to accident prevention regulations!
- Before beginning work on the product, make sure that the pump and drive are electrically isolated.
- Make sure that no one can turn on the power supply again before work is completed.
- Electrical machines must always be earthed. Earthing must be appropriate for the drive and meet the relevant standards and regulations. Earth terminals and fixation elements must be suitably dimensioned.
- Observe the installation and operating instructions for the accessories!

DANGER

Danger of death due to contact voltage!

Touching live parts will result in serious injuries or death!
Even when it is disconnected, high contact voltages can still occur in the terminal box due to non-discharged capacitors. Therefore, work on the terminal box module must not be started until 5 minutes have elapsed!

- Disconnect all poles of the supply voltage and secure against reconnection!
- Check whether all connections (including potential-free contacts) are voltage-free!
- Never insert objects (e.g. nail, screwdriver, wire) into openings on the terminal box!
- Reinstall removed safety devices (such as terminal box cover)!

CAUTION

Material damage due to improper electrical connection!
An inadequate mains design can lead to system failures and cable fires due to mains overload!

- When designing the mains supply with regard to the used cable cross-sections and fuses, pay special attention to the fact that, in multi-pump operation, it is possible that all pumps operate at the same time for short periods.

Preparation/notes

- Establish electrical connection via a fixed connection cable with a connector device or an all-pole switch with at least 3 mm contact opening width (VDE 0730/Part 1).
- To protect against leakage water and for strain relief to the threaded cable gland, use a connection cable with sufficient outer diameter and screw them so they are tight enough.
- The cables near the screwed connection are to be bent to form a drain loop, to drain any accumulated drips.
  Position the threaded cable gland and, by laying the cables accordingly, ensure that no drips are able to run into the terminal box. Unoccupied threaded cable glands must remain closed with the plugs provided by the manufacturer.
- Lay the connection cable in such a way that it touches neither the pipes nor the pump.
- Use a heat-resistant connection cable if fluid temperatures exceed 90 °C.
- The current type and voltage of the mains connection must correspond to the specifications on the rating plate.
- Fuse protection on mains side: Dependent on rated motor current.
- When connecting an external frequency converter, observe the corresponding installation and operating instructions! If necessary, carry out additional earthing due to higher leakage currents.
- The motor must be secured against overloading by a motor protection switch or by the PTC thermistor tripping unit (accessory).

Standard pumps on external frequency converters

If standard pumps are used on external frequency converters, the following aspects have to be considered regarding the insulation system and current-insulated bearings:

400 V power supply
The motors used by Wilo for glanded pumps are suitable for operation on external frequency converters.
It is strongly recommended to set up and operate the installation in compliance with IEC TS 60034-25:2014. Due to the rapidly advancing development in the field of frequency converters, WILO SE does not guarantee fault-free use of the motors on third-party converters.

500 V/690 V power supply
The motors which Wilo uses as standard for glanded pumps are not suited to be used on external frequency converters with 500 V/690 V.
For use in 500 V or 690 V mains, motors with appropriate winding and reinforced insulation system are available. This must be explicitly stated when ordering. The overall installation must comply with IEC TS 60034-25:2014.

Current-insulated bearings
Due to increasingly fast switching processes of the frequency converter, drops in voltage can occur across the motor bearing even with motors of lower power. In case of premature breakdown due to bearing current, use current-insulated bearings!

Always observe the following instructions when connecting the frequency converter to the motor:

- Observe the installation notes of the frequency converter manufacturer.
- Observe the rise times and peak voltages depending on the cable length in the respective installation and operating instructions of the frequency converter.
- Use an appropriate cable with a sufficient cross-section (max. 5 % voltage loss).
- Connect the correct shielding according to the recommendation of the frequency converter manufacturer.
- Lay the data cables (e.g. PTC analysis) separately from the mains cable.
- If necessary, use a sine filter (LC) in consultation with the frequency converter manufacturer.

NOTICE

The connection diagram for electrical connections is in the terminal box cover.

Setting the motor protection switch:

- Set according to the rated motor current specified on the rating plate of the motor.
  Y-Δ starting: If the motor protection switch is switched in the supply line to a Y-Δ contactor combination, adjust the switch as for direct starting.
  If the motor protection switch is switched in a thread of the motor supply line (U1/V1/W1 or U2/V2/W2), set the motor protection switch to the value 0.58 x rated motor current.
- Connect the PTC thermistor sensors to the PTC thermistor tripping unit.

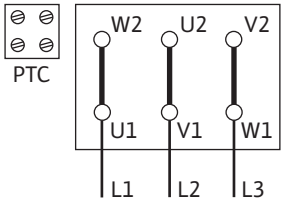

Fig. 10: Y-Δ start

CAUTION

Risk of property damage!

Only a maximum voltage of 7.5 V DC may be applied to the PTC thermistor sensor terminals. A higher voltage will destroy the PTC thermistor sensor.

- The mains connection is dependent on the motor power P2, mains voltage and activation type. Refer to the following table and Fig. 10 and Fig. 11 for the required connection of the connecting bridges in the terminal box.

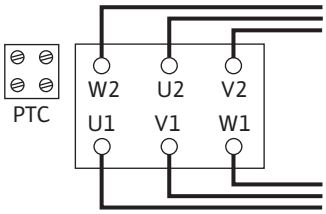

Fig. 11: Δ connection

Activation type	Mains voltage 3~ 400 V
Y-Δ-start (standard)	Remove connecting bridges (Fig. 10).
Start via soft starter	Δ connection (Fig. 11)

Table 8: Terminal assignment

- When connecting automatic switchgears, observe the corresponding installation and operating instructions.
- For three-phase current motors with Y-Δ connection, be sure that the switchover points between star and delta are very close together in time. **Longer switch-over times can lead to pump damage.**
  Recommended setting the times for Y-Δ activation:

Motor power	Time to be set
> 30 kW	< 5 seconds

CAUTION

Even brief dry running will destroy the mechanical seal!

Only carry out the direction of rotation monitoring after the system is filled!

NOTICE

Use of soft starters is recommended to limit the starting current and preventing tripping of overcurrent protection devices.

8.1 Anti-condensation heater

We recommend an anti-condensation heater for motors which, due to climatic conditions, are at risk of condensation. These are, for example, idle motors in humid environments or motors that are exposed to large temperature fluctuations. Motors equipped with an anti-condensation heater at the factory can be ordered as special versions. The anti-condensation heater is used to protect the motor windings against condensation water inside the motor.

- The anti-condensation heater is connected to the terminals HE/HE in the terminal box (connection voltage: 1~230 V/50 Hz).

CAUTION

Risk of damage due to incorrect handling!

The anti-condensation heater may not be switched on during motor operation.

9 Commissioning

- Electrical work: a qualified electrician must carry out the electrical work.
- Installation/dismantling: The technician must be trained in the use of the necessary tools and fixation materials.
- The product must be operated by persons who have been instructed on how the complete system functions.

DANGER

Danger of death due to lack of protective devices!

Due to missing protective devices of the terminal box or in the range of the coupling/motor, electric shock or contact with rotating parts can lead to life-threatening injuries.

- Before commissioning, safety devices such as terminal box covers or coupling covers that were removed must be reinstalled!
- An authorised technician must check the functionality of the safety devices on the pump and motor prior to commissioning!

WARNING

Danger of injury due to fluid shooting out and components coming loose!

Not installing the pump/system correctly can lead to serious injuries during commissioning!

- Carry out all work carefully!
- Keep a safe distance during commissioning!
- Always wear protective clothing, safety gloves and safety glasses when working.

NOTICE

It is recommended to have the pump commissioned by the Wilo customer service.

Preparation

9.1 Initial commissioning

The pump has to reach ambient temperature before commissioning.

- Check whether the shaft can be rotated without any grinding. In case the impeller is blocked or grinds, loosen the coupling screws and tighten them again with the specified torque. (See table on screw tightening torques).
- Fill and vent the system appropriately.

9.2 Filling and venting

CAUTION

Dry running will destroy the mechanical seal! It may cause leakage.

- Ensure that a dry run of the pump is not possible.

WARNING

There is a risk of burns or freezing upon coming into contact with the pump/system.

Depending on the pump and system operating conditions (fluid temperature), the entire pump can become very hot or very cold.

- Keep a safe distance during operation!
- Allow the system and pump to cool down to room temperature!
- Always wear protective clothing, safety gloves and safety glasses when working.

DANGER

Danger of personal injury and material damage due to extremely hot or extremely cold pressurised fluid!

Depending on the temperature of the fluid, when the venting device is opened completely, **extremely hot** or **extremely cold** fluid may escape in liquid or vapour form. Fluid may shoot out at high pressure depending on the system pressure.

- Always exercise caution when opening the venting device.

Fill and vent the system correctly.

1. To do this, loosen the air vent valves and vent the pump.
2. After venting the pump, tighten the air vent valves again so that no more water can escape.

NOTICE

- Always keep to the minimum pressure!

- To avoid cavitation noises and damage, a minimum inlet pressure must be guaranteed at the suction port of the pump. The minimum inlet pressure depends on the operating situation and the pump's duty point. Accordingly, the minimum pressure must be determined.
- The main parameters for defining the minimum inlet pressure are the NPSH value of the pump at its duty point and the vapour pressure of the fluid. The NPSH value can be found in the technical documentation of the respective pump type.

1. By briefly switching on, check whether the direction of rotation agrees with the arrow on the fan cover. If the direction of rotation is incorrect, proceed as follows:

- For direct starting: Swap two phases on the motor terminal board (e.g. L1 for L2).
- For Y-Δ starting:
  Swap the thread start and thread end of two windings on the motor terminal board (e.g. V1 for V2 and W1 for W2).

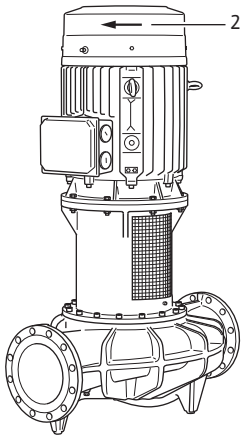

Fig. 12: Check direction of rotation

9.3 Activation

- The unit may only be switched on when the shut-off device on the discharge side is closed! Only after full speed has been reached may the shut-off device be slowly opened and be adjusted to the duty point.

The unit must run smoothly and free of vibration.
The mechanical seal ensures that a seal will not leak and requires no special setting. Should there be a small leakage at the beginning, it will stop when the initial inlet phase of the gasket is over.

DANGER

Danger of death due to lack of protective devices!

Due to missing protective devices of the terminal box or near the coupling/motor, electric shock or contact with rotating parts can lead to life-threatening injuries.

- Immediately after the conclusion of all work, all the provided safety and protection equipment items must be properly installed and put into operation!

9.4 Switching off

- Close the shut-off device in the discharge line.

NOTICE

If a non-return valve is installed in the discharge line, and there is counterpressure, the shut-off device can remain open.

CAUTION

Risk of damage due to incorrect handling!

When switching off the pump, the shut-off device in the inlet pipe must not be closed.

- Switch off the motor and allow it to coast down completely. Ensure the coasting is smooth.
- For longer downtimes, close the shut-off device in the inlet pipe.
- For longer periods of non-use and/or danger of freezing, drain the pump and secure it against freezing.
- After removing the pump, store it in a dry and dust-free place.

9.5 Operation

NOTICE

The pump must always run smoothly and vibration-free and must not be operated in conditions other than those specified in the catalogue/data sheet.

DANGER

Danger of death due to lack of protective devices!

Due to missing protective devices of the terminal box or near the coupling/motor, electric shock or contact with rotating parts can lead to life-threatening injuries.

- Immediately after the conclusion of all work, all the provided safety and protection equipment items must be properly installed and put into operation!

WARNING

There is a risk of burns or freezing upon coming into contact with the pump/system.

Depending on the pump and system operating conditions (fluid temperature), the entire pump can become very hot or very cold.

- Keep a safe distance during operation!
- Allow the system and pump to cool down to room temperature!
- Always wear protective clothing, safety gloves and safety glasses when working.

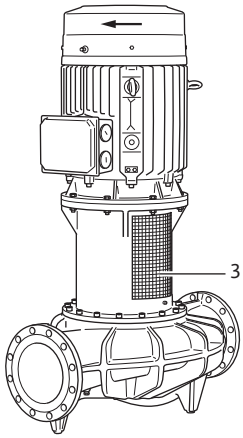

Fig. 13: Installed coupling guard

The pump can be switched on and off in different ways. This depends on the different operating conditions and the degree of automation of the installation. Observe the following points:

Stop procedure:

- Prevent return flow to the pump.
- Do not work too long with too low a volume flow.

Start procedure:

- Make sure that the pump is completely filled up.
- Do not work too long with too low a volume flow.
- Larger pumps require a minimum flow rate amount to operate properly.
- Operating against a closed shut-off device can lead to overheating in the centrifugal chamber and to damage of the shaft seal.
- Ensure a continual flow to the pump with a sufficiently large NPSH.
- Prevent insufficient counter pressure leading to a motor overload.
- To avoid significant increases in motor temperature and excessive load on the pump, coupling, motor, gaskets and bearings, perform no more than 10 switch-on procedures per hour.

10 Maintenance

- Maintenance work: The technician must be familiar with the use of operating fluids and their disposal.
- Electrical work: a qualified electrician must carry out the electrical work.
- Installation/dismantling: The technician must be trained in the use of the necessary tools and fixation materials.

It is recommended to have the pump serviced and checked by the Wilo customer service.

DANGER

Danger of death due to electrical current!

Improper conduct when carrying out electrical work can lead to death due to electric shock!

- Any work on electrical devices may only be carried out by a qualified electrician.
- Before carrying out any work, disconnect the unit from the power supply and secure it against accidental switch-on.
- Any damage to the pump connection cable should only ever be rectified by a qualified electrician.
- Follow the installation and operating instructions for the pump, level control device and other accessories.
- Never poke around in the motor openings or insert anything into them.
- After completing the work, refit previously dismantled protective devices, for example, terminal box covers or coupling covers.

DANGER

Danger of death from falling parts!

The pump itself and pump parts can have a very high net weight. Falling parts pose a risk of cuts, crush injuries, bruises or impacts, which can be fatal.

- Always use suitable lifting accessories and secure parts against falling.
- Never stand below a suspended load.
- During storage and transport, as well as before all installation and assembly work, ensure that the pump is in a safe position and standing securely.

DANGER

Danger of death due to ejected tools!

The tools used during maintenance work on the motor shaft can be thrown away if they come into contact with rotating parts. Injuries and even death are possible!

- The tools used during maintenance work must be removed completely before the pump is started up!

WARNING

There is a risk of burns or freezing upon coming into contact with the pump/system.

Depending on the pump and system operating conditions (fluid temperature), the entire pump can become very hot or very cold.

- Keep a safe distance during operation!
- Allow the system and pump to cool down to room temperature!
- Always wear protective clothing, safety gloves and safety glasses when working.

10.1 Air supply

Check the air supply to the motor housing at regular intervals. Dirt impairs the cooling of the motor. If necessary, remove dirt and restore unrestricted air supply.

10.2 Maintenance work

DANGER

Danger of death from falling parts!

Falling pumps or individual pump components may result in life-threatening injuries!

- During installation work, secure pump components against falling down with suitable lifting gear.

DANGER

Risk of fatal electrical shock!

Check for absence of voltage and cover or cordon off adjacent live parts.

10.2.1 Replacing the mechanical seal

There may be a slight amount of drip leakage during the running-in period. Even during normal operation of the pump, it is normal for there to be slight leakage with the occasional formation of drops.
In addition, carry out a visual inspection regularly. If leakage is clearly visible, replace the gasket.
Wilo offers a repair kit which contains the necessary parts for replacement.

Dismantling: Fig. I to XI

WARNING

Risk of scalding!

At high fluid temperatures and system pressures, allow the pump to cool down first and then depressurise the system.

1. Disconnect the system from the power supply and secure it against being switched on again without authorisation.
2. Make sure it is not live.
3. Earth the work area and short-circuit.
4. Close the shut-off devices upstream and downstream of the pump.
5. Disconnect mains connection cable.

6. Depressurise the pump by opening the air vent valve (Fig. XXIX/XXX/XXXII, Item 1.31).

NOTICE

For all subsequent work, observe the torque specified for the respective thread type (see tightening torques table)!

7. Remove the coupling guard metal sheets (Fig. I, Item 1) with a suitable tool (e.g. screwdriver).
8. Turn the coupling/shaft so that the four interior hexagonal head screws (twist guard; Fig. II Item 1) are opposite the cover holes.
9. Unscrew the interior hexagonal head screws (locking pins) one after the other until the head is countersunk half way into the cover collar (Fig. II or Fig. III depending on the pump type).
10. Unscrew all four cover screws (Fig. IV).
11. Screw in two of the cover screws up to the stop into the press-off drilled holes to press the cover out of its seat (Fig. IV/V).
12. Unscrew one of the coupling screws and turn it all the way into one of the installation drilled holes (Fig. VI, Item 1). To do this, the coupling half is fixed by the retaining washer (Fig. VI, Item 3) at the impeller shaft.
13. Unscrew the remaining coupling screws and take off the loose coupling half. If need be, use the provided press-off drilled holes (Fig. VI, Item 4). The impeller shaft is now held up by the retaining washer (Fig. VII, Item 1).
14. Unscrew the hexagon head screw (Fig. VII, Item 2) at the motor shaft to lower the retaining washer (Fig. VII, Item 1), thereby lowering the impeller/impeller shaft (Fig. VII, Item 3). When the impeller has been completely lowered (Fig. VIII, after a travel of about 5 mm), completely take out the hexagon head screw and the retaining washer.
15. Unscrew the coupling screw out of the installation drilled hole and remove the remaining coupling half (Fig. IX). If need be, use the provided press-off drilled holes.
16. Unscrew the central screw (Fig. X, Item 2) of the impeller shaft and remove it with the retaining washer (Fig. X, Item 3).
17. Take out both impeller shaft keys (Fig. X, Item 1).
18. Carefully pull off and remove the mechanical seal (Fig. XI) from the impeller shaft.

Installation: Fig. XII to XXIII

NOTICE

Thoroughly clean the sliding/seat surfaces of the impeller shaft and the lantern. If the shaft is damaged, it must be replaced. Always use new screws for the twist guard. Replace the O-rings in the cover groove and in the shaft sleeve groove.

1. Completely screw in a cover screw (Fig. XII, Item 1) into each of the two press-off drilled holes of the cover.
2. Be sure that all interior hexagonal head screws (locking pins) are countersunk half way into the cover collar (Fig. XII).
3. Put the mechanical seal onto the impeller shaft in such a way that the four drilled holes for the cover screws are opposite the threads (Fig. XIII). Attention: If the drilled holes of the locking pins are not arranged at 90° to each other, pay attention to the installation position. The drilled holes must point towards the lantern window to facilitate accessibility of the grub screws (Fig. II or Fig. III, depending on the pump type). Push the mechanical seal on until the forcing screws are on the housing. A commercially available dishwashing liquid can be used as a lubricant.
4. Check the keys in the motor shaft for correct seating.
5. Push the motor shaft retaining washer on and fix with central screw (Fig. XIV). Ensure that the motor shaft retaining washer is well seated when the central screw is com-

pletely screwed in and that the central screw thread bears at least 12 mm in the motor shaft thread in this position. In case necessary, use the supplied washers.

6. By unscrewing the central screw, lower the retaining washer of the motor shaft by about 5 mm (Fig. XIV).
7. Put the first key (Fig. XV, Item 1) in the impeller shaft, put on the retaining washer (Fig. XV, Item 2) of the impeller shaft and screw in the hexagon head screw (Fig. XV, Item 3) **by hand**.
8. Rotate the motor shaft so that the motor shaft key and impeller shaft key are opposite each other.
9. Put the first coupling half on the two keys and the retaining washers (Fig. XVI).
10. Align the threaded hole in the impeller shaft retaining washer to the installation drilled hole of the coupling half.
11. Insert one of the coupling screws into the installation drilled hole and screw in half way (Fig. XVII).

NOTICE

For all subsequent work, observe the torque specified for the respective thread type (see tightening torques table)!

12. Tighten the central screw of the impeller shaft with the prescribed torque. Use a strap wrench to apply counter pressure.
13. Tighten the mounting screw (Fig. XVII).
14. Tighten the central screw of the motor shaft with the prescribed torque (Fig. XVIII, Item 1). Use a strap wrench to apply counter pressure.
15. Insert the second key (Fig. XIX, Item 2) of the impeller shaft.
16. Put on the second coupling half (Fig. XIX, Item 1).
17. Evenly screw the available coupling screws, as a final step, the coupling screw from the installation drilled hole (Fig. XX).
18. Unscrew both mechanical seal press-out forcing screws from the cover (Fig. XXI).
19. Carefully vertically press the mechanical seal into its seat. Avoid damage to the mechanical seal due to jamming (Fig. XXI).
20. Screw in all four cover screws (Fig. XXII, Item 1) and tighten them with the prescribed torque.
21. Rescrew and tighten the four interior hexagonal head screws (locking pins, Fig. XXII, Item 2) completely in succession.
22. Install the coupling guard metal sheets (Fig. XXIII).
23. Connect the motor cable.

10.2.2 Changing the motor

Increased bearing noises and unusual vibrations indicate bearing wear. The bearings or motor must then be replaced. The drive may only be replaced by the Wilo customer service!

Dismantling: Fig. XXIV to XXVII

WARNING

Risk of scalding!

At high fluid temperatures and system pressures, allow the pump to cool down first and then depressurise the system.

WARNING

Personal injury!

Incorrect dismantling of the motor can result in personal injury.

- Before dismantling the motor, ensure that the centre of gravity is not above the holding point.
- Secure the motor against tipping over during transport.
- Always use suitable lifting accessories and secure parts against falling.
- Never stand below a suspended load.

1. Disconnect the system from the power supply and secure it against being switched on again without authorisation.
2. Make sure it is not live.
3. Earth the work area and short-circuit.
4. Close the shut-off devices upstream and downstream of the pump.
5. Depressurise the pump by opening the air vent valve (Fig. XXIX/XXX/XXXII, Item 1.31).
6. Disconnect the motor connection cables.
7. Remove the coupling guard metal sheets (Fig. I, Item 1) with a suitable tool (e.g. screw-driver).
8. Press the mechanical seal out of its seat and dismantle the coupling (see “Dismantling” in “Replacing the mechanical seal” section and Fig. I to VIII).
9. Loosen the motor fastening screws (Fig. XXV, Item 1) on the motor flange and lift the drive off the pump with suitable hoisting gear (Fig. XXVII).
10. Install the new motor using suitable hoisting gear and screw the connection between lantern and motor tight (Fig. XXVIII).

NOTICE

For all subsequent work, observe the torque specified for the respective thread type (see tightening torques table)!

11. Check the coupling and shaft sliding surfaces and, if necessary, clean them.
12. Install the coupling and fasten the mechanical seal (see “Installation” in “Replacing the mechanical seal” section and Fig. XII to XXI).
13. Install the coupling guard metal sheets (Fig. XXIII).
14. Connect the motor cable.

Always tighten screws diagonally.

Screw connection			Tightening torque
Post	Size/tensile strength class		Nm ± 10 %
Impeller – Shaft[1)]	M20	A2-70	100
Impeller – Shaft[1)]	M18		145
Impeller – Shaft[1)]	M24		350
Pump housing – Lantern	M16	8.8	100
Pump housing – Lantern	M20		170
Lantern – Motor	M16		100
Lantern – Motor	M20		170
Coupling[2)]	M10	10.9	60
Coupling[2)]	M12		100
Coupling[2)]	M14		170
Coupling[2)]	M16		230

Screw connection			Tightening torque
Post	Size/tensile strength class		Nm ± 10 %
Mechanical seal – Shaft[3]	M6		7
Mechanical seal – Lantern	M8	8.8	25
Mechanical seal – Lantern	M10		35
Mechanical seal – Lantern	M10		35
Retaining washer – Impeller shaft	M16		60
Retaining washer – Motor shaft	M20		60
Baseplate – Pump housing Baseplate – Pump support foot Baseplate – Motor Supporting block – Pump housing Supporting block – Pump support foot Supporting block – Motor	M6 M8 M10 M12 M16 M20 M24		10 25 35 60 100 170 350

Installation information:

[1] Lubricate the thread with Molykote® P37 or comparable.

[2] Tighten the screws uniformly, keep the gap even on both sides.

[3] Rescrew and tighten every screw separately.

Table 9: Tightening torques

11 Faults, causes and remedies

WARNING

Have faults remedied by qualified personnel only! Observe all safety instructions!

If the malfunction cannot be rectified, consult a specialist technician or the nearest Wilo customer service or representative location.

Faults	Causes	Remedies
Pump does not start or stops working.	Pump blocked.	Electrically isolate the motor. Remove the cause of the blocking. Motor blocking: Overhaul/ replace motor/motor impeller unit.
	Incorrectly installed mechanical seal.	Remove the mechanical seal; replace defective parts; install mechanical seal in accordance to the instructions.
	Cable terminal loose.	Check all cable connections.
	Fuse protection defect.	Check fuses; replace faulty fuses.
	Motor damaged.	Have the motor checked by the Wilo customer service or a specialised service centre and repaired if necessary.
	Motor protection switch has triggered.	Set the pump to the rated volume flow on the discharge side (see rating plate).
	Motor protection switch set incorrectly	Set the motor protection switch to the correct rated current (see rating plate).
	Motor protection switch affected by excessive ambient temperature	Move the motor protection switch or protect it using heat insulation.
	PTC thermistor tripping unit has triggered.	Check the motor and fan cover for contamination and clean them if necessary. Check the ambient temperature and, if necessary, set the ambient temperature to ≤ 40 °C by forced ventilation.
Pump runs at reduced performance.	Incorrect direction of rotation.	Check the direction of rotation and change it if necessary.
	Stop valve on the pressure side throttled.	Slowly open the stop valve.
	Speed too slow	Incorrect terminal bridging (Y instead of Δ).
	Air in the suction line	Eliminate leakage at flanges. Vent pump. In case of visible leakage, replace the mechanical seal.

Faults	Causes	Remedies
Pump makes noises.	Cavitation due to insufficient suction pressure.	Increase the suction pressure. Observe the minimum inlet pressure at the suction port. Check slide valve and filter on the suction side and clean if need be.
	Incorrectly installed mechanical seal.	Remove the mechanical seal; replace defective parts; install mechanical seal in accordance to the instructions.
	Motor has bearing damage.	Have the pump checked by Wilo customer service or a specialised service centre and repaired if necessary.
	Impeller grinding.	Check faces and centrings and between lanterns and motor and lantern and pump housing, clean if necessary. Check the coupling and shaft sliding surfaces. If necessary, clean and slightly oil them.

Table 10: Faults, causes and remedies

12 Spare parts

Obtain genuine spare parts only from a qualified specialist or Wilo customer service. To avoid queries and order errors, please provide all pump and drive rating plate data with every order.

CAUTION

Risk of material damage!

Trouble-free pump operation can only be guaranteed when original spare parts are used.

Use only original Wilo spare parts!

Information to be provided when ordering spare parts: Spare part numbers, spare part designations, all data from pump and drive rating plate. This helps prevent return queries and incorrect orders.

NOTICE

List of genuine spare parts: See Wilo spare parts documentation.

For the allocation of assemblies, see spare parts table.

No.	Part	Details	No.	Part	Details
1	Exchange kit (complete)		1.5	Coupling (complete)	
1.1	Impeller (kit) with:		2	Motor	
1.11		Nut	3	Pump housing (kit) with:	
1.12		Conical spring washer	1.14		O-ring
1.13		Impeller	3.1		Pump housing (Atmos GIGA-I/-D/-B)
1.14		O-ring	3.2		Switchover valve DN 150 and DN 200 (only Atmos GIGA-D)

No.	Part	Details	No.	Part	Details
1.2	Mechanical seal (kit) with:		3.3		Stopper for pressure measurement connections
1.11		Nut	3.4		Screw plug for drain hole
1.12		Conical spring washer	4	Fastening screws for lantern/pump housing	
1.14		O-ring	5	Fastening screws for motor/lantern	
1.21		Mechanical seal	6	Nut for motor/lantern fixation	
1.3	Lantern (kit) with:		7	Washer for motor/lantern fixation	
1.11		Nut			
1.12		Conical spring washer			
1.14		O-ring			
1.31		Air vent valve			
1.32		Coupling guard			
1.33		Lantern			
1.4	Coupling/shaft (kit) with:				
1.11		Nut			
1.12		Conical spring washer			
1.14		O-ring			
1.41		Complete coupling/shaft			
1.42		Circlip			

Table 11: Spare parts table

13 Disposal

13.1 Oils and lubricants

Operating fluids must be collected in suitable containers and disposed of in accordance with the locally applicable guidelines. Wipe up drips immediately!

13.2 Information on the collection of used electrical and electronic products

Proper disposal and appropriate recycling of this product prevents damage to the environment and danger to your personal health.

NOTICE

Disposal in domestic waste is prohibited!

In the European Union this symbol may be included on the product, the packaging or the accompanying documentation. It means that the electrical and electronic products in question must not be disposed of along with domestic waste.

Please note the following points to ensure proper handling, recycling and disposal of the used products in question:

- Hand over these products at designated, certified collection points only.
- Observe the locally applicable regulations!

Please consult your local municipality, the nearest waste disposal site, or the dealer who sold the product to you for information on proper disposal. See www.wilo-recycling.com for more information about recycling.