IMP PUMPS d.o.o. Pod hrasti 28 SI - 1218 Komenda Slovenia Phone: +386 (0)1 28 06 400 Fax: +386 (0)1 28 06 460

GHNbasic II 100-190F PN6

979524579

GHNbasic II / Three speeds circulation pumps with flanges

Heating/cooling

GENERAL

Part number	**979524579**		
Part name	**GHNbasic II 100-190F PN6**		
Seal type			
Net weight	**38.10 [kg]**		
H max	**18.5 [m]**	H min	**0.0 [m]**
Q max	**57.0 [m3/h]**	Q min	**0.0 [m3/h]**
	[%]		
Noise	**dB(A)**		

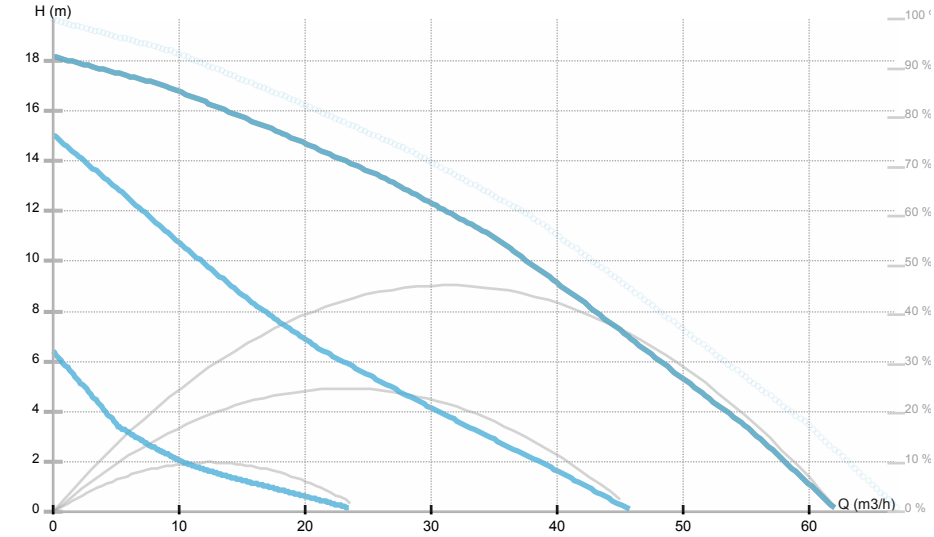

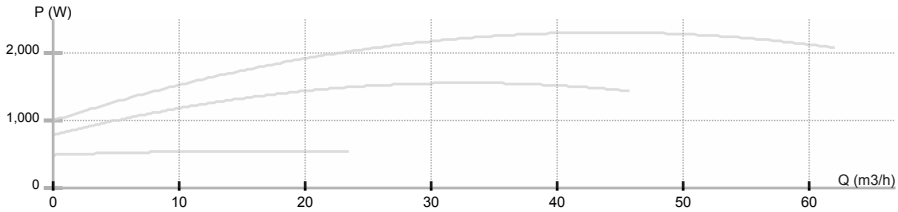

ELECTRICAL DATA

Power supply	**3~400 V**
Mains frequency	**50 Hz**
Motor power	**2287 [w]**
RPM	**1200 - 2800 [1/min]**
Insulation class	**200**
Declared current	**3.9 [A]**
Declared protection	**IP44**
Thermal protection	
Frame size	
Motor IE class	

INSTALLATION

Fluid	**Water VDI 2035, glycol 50%**
Fluid temperature	**-10.0 ÷ 120.0 [°C]**
Ambient temp.range	**40 deg C**
Length	**360 [mm]**
DN	**100 [mm]**
Connector	**PN6**
Connection	**PN6**
Max pressure	

MATERIAL

Bearing material	**Graphite**
Impeller material	**AISI 304**
Hydraulics material	**Gray cast iron**
Shaft material	**AISI 431**

IMP PUMPS d.o.o. Pod hrasti 28 SI - 1218 Komenda Slovenia Phone: +386 (0)1 28 06 400 Fax: +386 (0)1 28 06 460

GHNbasic II 100-190F PN6

979524579

GHNbasic II / Three speeds circulation pumps with flanges

Heating/cooling

IMP PUMPS d.o.o. Pod hrasti 28 SI - 1218 Komenda Slovenia Phone: +386 (0)1 28 06 400 Fax: +386 (0)1 28 06 460

GHNbasic II 100-190F PN6

979524579

GHNbasic II / Three speeds circulation pumps with flanges

Heating/cooling

Dimension drawing

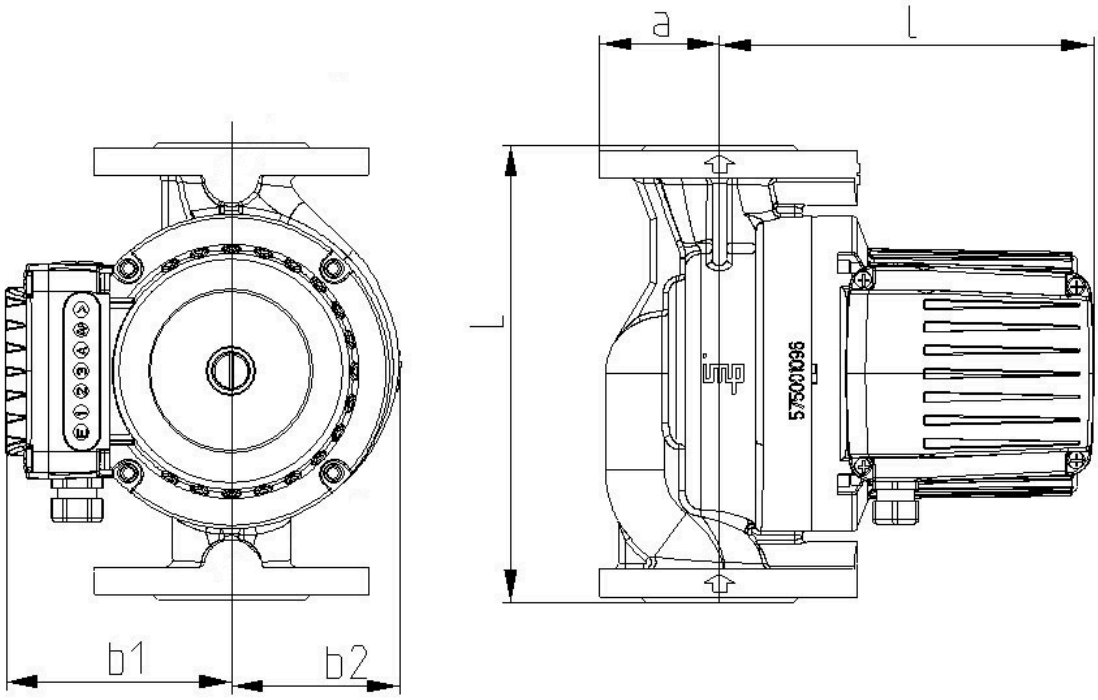

DN=100 L=360 a=110 l=257 b1=130 b2=130 R=1/4

IMP PUMPS d.o.o. Pod hrasti 28 SI - 1218 Komenda Slovenia Phone: +386 (0)1 28 06 400 Fax: +386 (0)1 28 06 460

GHNbasic II 100-190F PN6

979524579

GHNbasic II / Three speeds circulation pumps with flanges

Heating/cooling

Electrical wiring

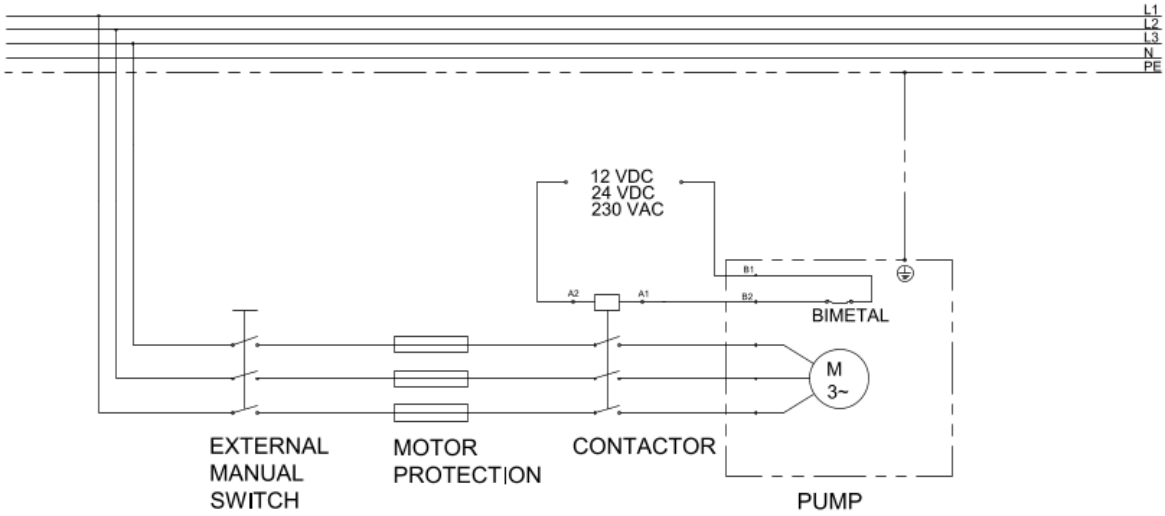

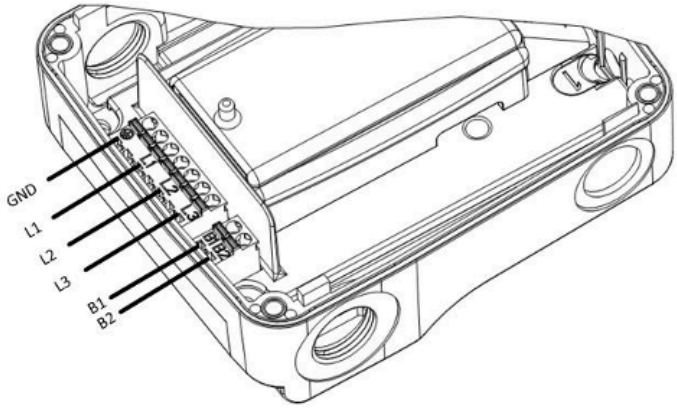

IMP PUMPS d.o.o. Pod hrasti 28 SI - 1218 Komenda Slovenia Phone: +386 (0)1 28 06 400 Fax: +386 (0)1 28 06 460

GHNbasic II 100-190F PN6

979524579

GHNbasic II / Three speeds circulation pumps with flanges

Heating/cooling