DATA SHEET

19/09/24

DAB PUMPS S.p.A.
Via Marco Polo, 14 - 35035 Mestrino (PD), Italy
Tel. +39 049 5125000 - Fax +39 049 5125950
www.dabpumps.com

Receiver

Company
Reference
Address
Phone
Fax
E-mail

From

Item n° : 60180242

Customer pos. no.:

Model :

1 NKV 10/5 S T E1 IE3

Pump data

MEI ≥

Pressure rating :	232,1 psi
Min. fluid temperature :	0 °C
Max. fluid temperature :	120 °C
Max. Ambient temperature :	50 °C

Requested data

Flow :	
Head :	
Fluid (%) :	
Fluid Temperature :	20 °C
Density :	998,3 kg/m³
Kinematic viscosity :	1,005 mm²/s
Vapor pressure :	0,34 psi

Real duty point

Flow :	
Head :	
NPSH :	
Shaft power P2 :	
Efficiency :	

Materials

Pump body	Stainless Steel AISI 304
External sleeve	Stainless Steel AISI 304
Impeller	Stainless Steel AISI 304
Pump shaft	Stainless Steel AISI 304
Mechanical seal	SEE "SHAFT SEAL" SECTION
Diffuser body and diffuser	Stainless Steel AISI 304
Baseplate	Galvanized steel

Shaft seal

Type	AISI 316
Stationary part	Carbon
Rotating part	Silicon carbide
Elastomer	EPDM

Motor data main pump:

Nominal power P2 :	1,5 kW	
Rated speed :	2.875 1/min	
Rated voltage :	3~ 400 V	50 Hz
Nominal current :	3 A	
Degree of protection :	IP 55	

Curve tolerance according to ISO 9906

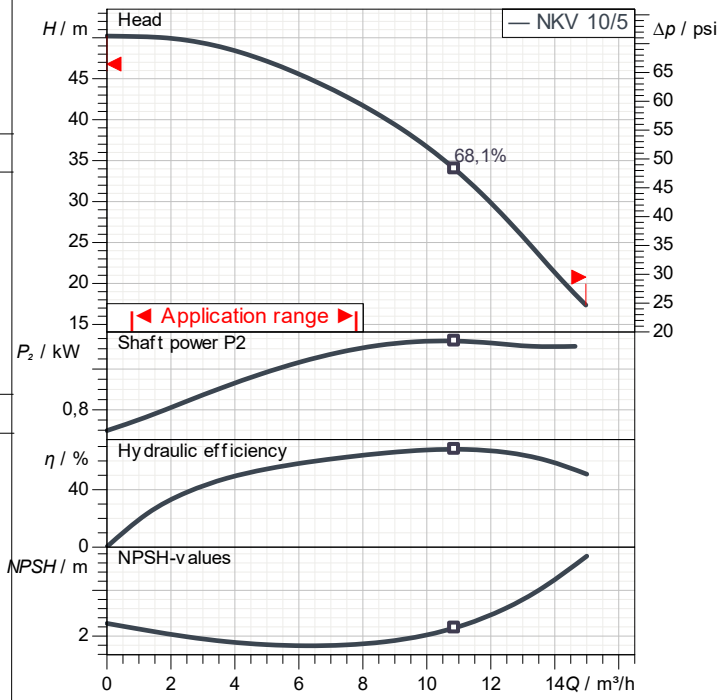

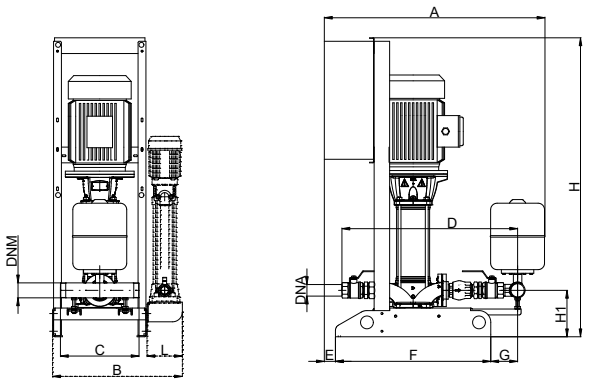

DESCRIZIONE	A	B	C	D	E	F	G	H	H1	L	DNA	DNM
1 NKV 10+PP	1060	660	400	790	60	790	72	1525	226	180	1" 1/2	2"
1 NKV 15-20+PP	1125	660	400	880	60	790	136	1525	236	180	2"	2" 1/2

Weight : 0 kg

Dimensions in mm

A	1.060	G	72
B	660	H	1.525
C	400	H1	226
D	790	L	180
DNA	1" 1/2		
DNM	2"		
E	60		
F	790		

Pump connection

Suction side :	1 " 1/2	/	232,1 psi
Discharge side :	2 "	/	232,1 psi

DAB PUMPS reserves the right to make modifications without notice

PERFORMANCE CURVES

19/09/24

DAB PUMPS S.p.A.
Via Marco Polo, 14 - 35035 Mestrino (PD), Italy
Tel. +39 049 5125000 - Fax +39 049 5125950
www.dabpumps.com

	Receiver	From
Company Reference Address Phone Fax E-mail		

1 NKV 10/5 S T E1 IE3

Curve tolerance according to ISO 9906

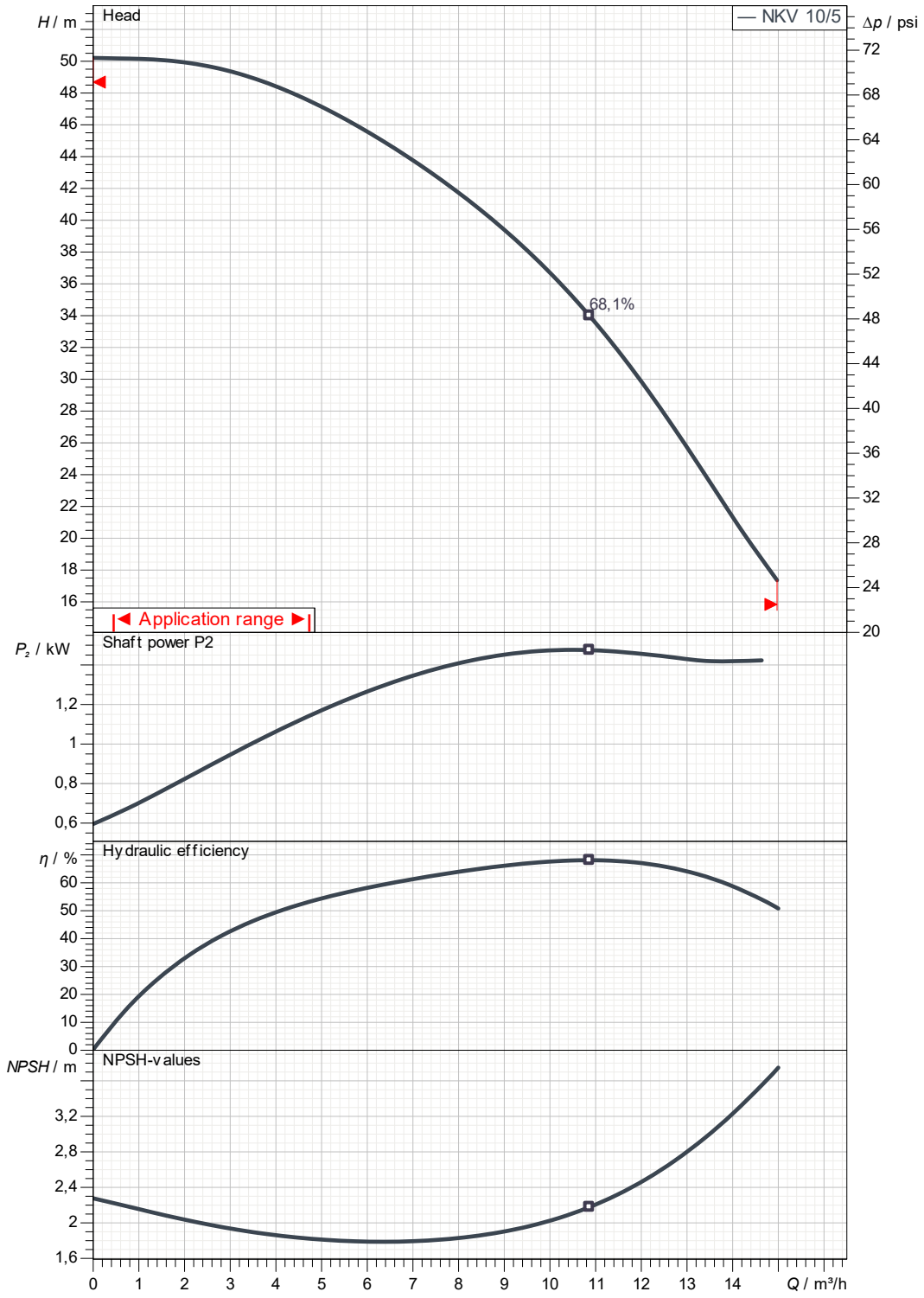

Hydraulic data (dutypoint)

Suction side :	Discharge side :	Flow :	Head :	Rated speed :
1 " 1/2 232,1 psi	2 " 232,1 psi			2.875 1/min

Project	Project ID	Created by	Created on
			19/09/24

DAB PUMPS reserves the right to make modifications without notice

DIMENSIONAL DRAWING

19/09/24

DAB PUMPS S.p.A.
Via Marco Polo, 14 - 35035 Mestrino (PD), Italy
Tel. +39 049 5125000 - Fax +39 049 5125950
www.dabpumps.com

	Receiver	From
Company Reference Address Phone Fax E-mail		

1 NKV 10/5 S T E1 IE3

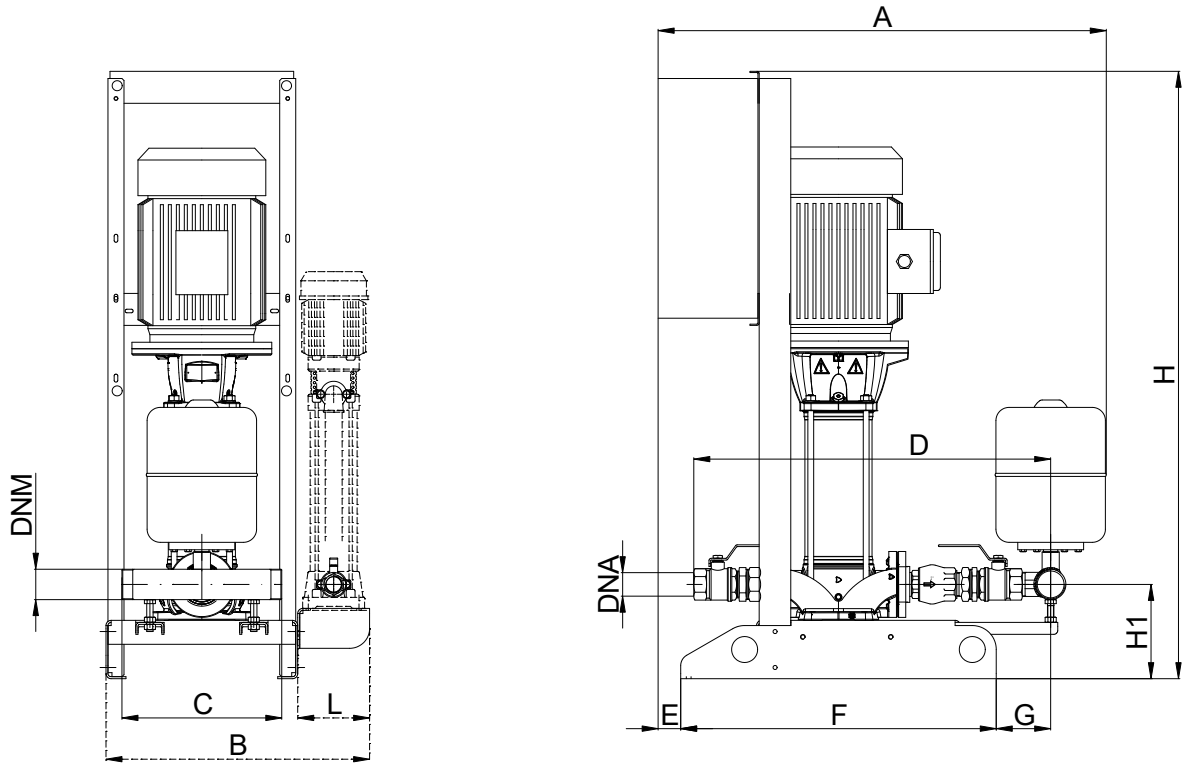

DESCRIZIONE	A	B	C	D	E	F	G	H	H1	L	DNA	DNM
1 NKV 10+PP	1060	660	400	790	60	790	72	1525	226	180	1"1/2	2"
1 NKV 15-20+PP	1125	660	400	880	60	790	136	1525	236	180	2"	2"1/2

	Dimensions in mm						Pump connection
1	A	1.060	L	180			
2	B	660					Suction
3	C	400					1 " 1/2
4	D	790					232,1 psi
5	DNA	1" 1/2					
6	DNM	2"					
7	E	60					Discharge
8	F	790					2 "
9	G	72					232,1 psi
10	H	1.525					
11	H1	226					

Project	Project ID	Created by	Created on
			19/09/24

DAB PUMPS reserves the right to make modifications without notice