LEO 利欧	Product Information 50WQD5-7-0.25M	Manufacturer	LEO
		Address	China,Zhejiang,Wenling
		Contact	0576-89988888
		Date	2024/04/27
Project Name		Client Name	Heatinvest
		Client Addr.	
Item NO		Contacts	
		Contact	

Part NO.	50WQD5-7-0.25TM

Product Picture	Note
	Main Application 1) Drainage systems 2) Rain & storm water drainage 3) Waste water with fibres & particles content 4) Domestic & municipal & industrial waste water transfer. 5) To transfer various wastewater, dirty water

Nameplate parameters

flow	5 m³/h
head	7 m
speed	3000 rpm
number of stages	1

Technical

Curve tolerance	GB/T 3216 Appendix A
Maximum lift (m)	9
Minimum usage flow (m³/ h)	0.75
Maximum use flow (m³/ h)	14.5

Material

Impeller	HT200
Pump inlet	HT200
Cylinder head	HT200
chassis	HT200
Upper bearing seat	HT200
Top hat	HT200

Working conditions

Max. Particles Size	5
Max. ambient temperature (°C)	40
Max. liquid temperature (°C)	40
Pumped medium	The maximum liquid density is 1.2X10³Kg/m³
Working pressure	PN6

Installation

Coupling Model	DN50
Max. Immersion Depth	5
Connection standard	thread-connection
Pipe Diameter	50

Motor

Motor phase	Single phase
Protection class	IP×8
Motor poles	2
Insulation class	F
Motor power (KW)	0.25KW
Frequency	50

Rated voltage (V)	220
Rated current (A)	2.65
Power factor	0.77
Drive end bearing	6203
Non-drive end bearing	6202
Efficiency (%)	50.6

Seal

Mechanical seal	Double Mechanical Seal 202-14

Weight/Packaging

Gross weight (kg)	15.87
Package size	522*269*224

LEO 利欧 LOVE EACH OTHER

LEO 利欧	Performance Curve 50WQD5-7-0.25M	Manufacturer	LEO
		Address	China,Zhejiang,Wenling
		Contact	0576-89988888
		Date	2024/04/27
Project Name		Client Name	Heatinvest
		Client Addr.	
Item NO		Contacts	
		Contact	

The hydraulic performance curve have been tested withWaterat°C,density 1000kg/m³,and at 1bar atmospherical pressure. GB32162016 Grande 3B

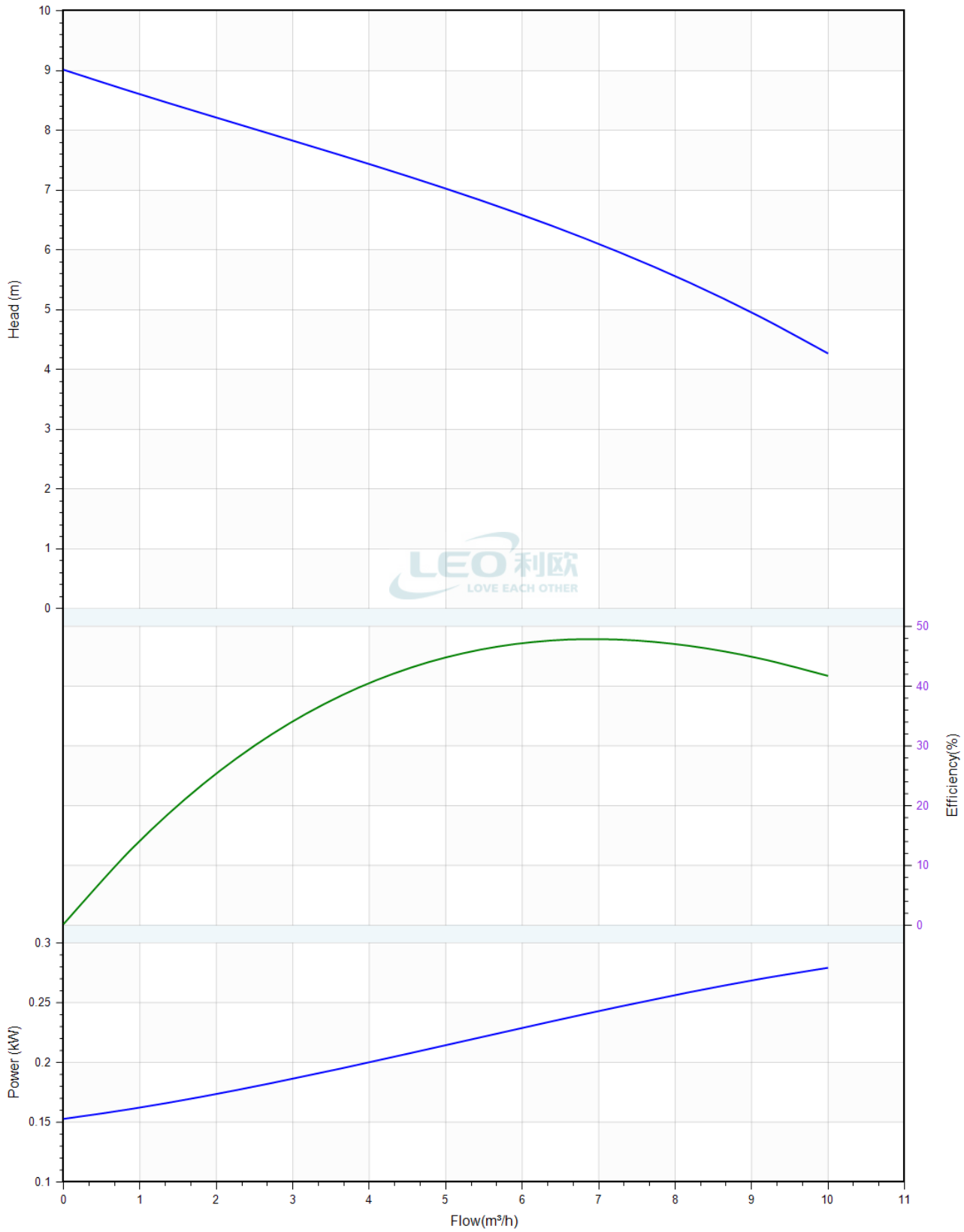

LEO 利欧	Pump Technical Parameters 50WQD5-7-0.25M	Manufacturer	LEO
		Address	China,Zhejiang,Wenling
		Contact	0576-89988888
		Date	2024/04/27
Project Name		Client Name	Heatinvest
		Client Addr.	
Item NO		Contacts	
		Contact	

Rated parameters	
Pump model	50WQD5-7-0.25M
Part NO.	50WQD5-7-0.25TM
Rated flow	5 m³/h
Rated head	7 m
Rated efficiency (%)	44.4
Power (kW)	0.215
Speed (rpm)	3000

Medium	
Pumped medium	Water
Working temperature (°C)	20
Medium density (kg/m³)	1000
Viscosity (mm²/s)	1

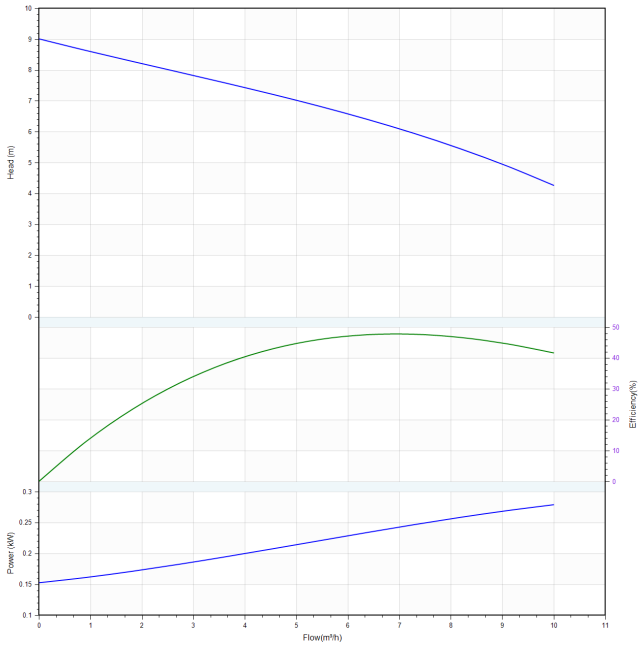

LEO 利欧
LOVE EACH OTHER

LEO 利欧	Installation picture 50WQD5-7-0.25M	Manufacturer	LEO
		Address	China,Zhejiang,Wenling
		Contact	0576-89988888
		Date	2024/04/27
Project Name		Client Name	Heatinvest
		Client Addr.	
Item NO		Contacts	
		Contact	

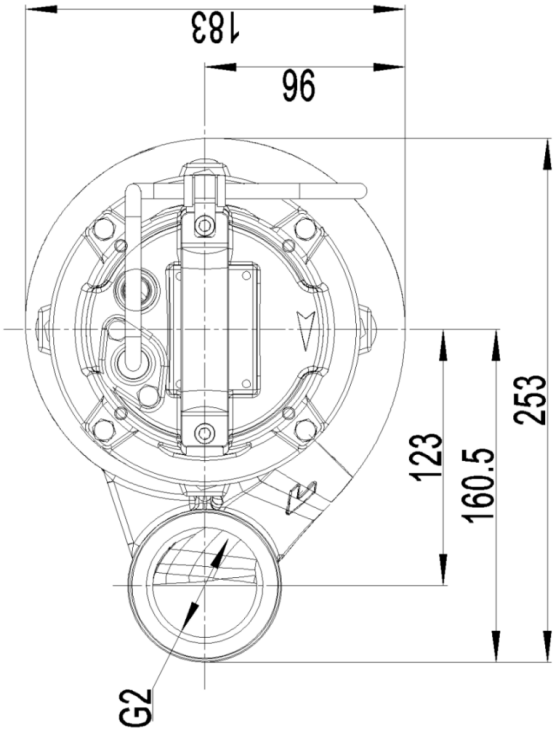

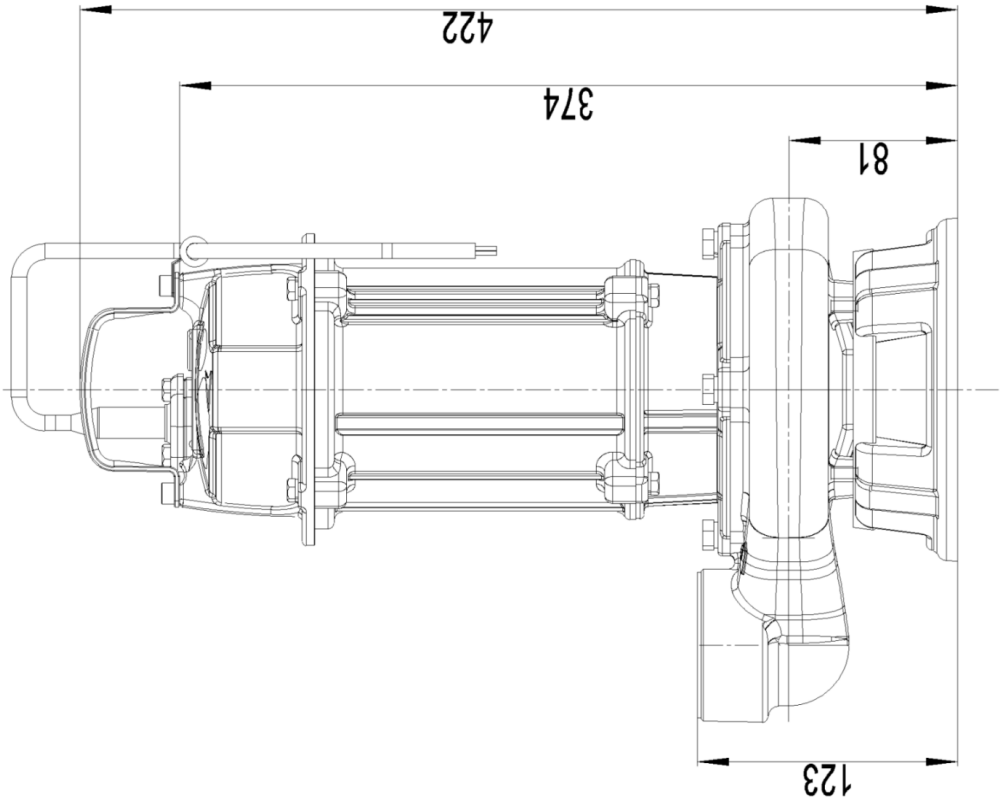

LEO 利欧	Structure picture 50WQD5-7-0.25M	Manufacturer	LEO
		Address	China,Zhejiang,Wenling
		Contact	0576-89988888
		Date	2024/04/27
Project Name		Client Name	Heatinvest
		Client Addr.	
Item NO		Contacts	
		Contact	

序号	名称	材料
30	定子	
29	转子	
28	轴承	
27	O形密封圈	NBR
26	上端盖	HT200
25	出线嘴	NBR
24	电容夹	PP-GF10
23	电容	
22	O形密封圈	NBR
21	顶盖	HT200
20	警示标贴	聚亚酰胺不干胶
19	铭牌	304
18	提手	304
17	线夹	不锈钢
16	线夹护套	NBR
15	插头线组件	
14	机筒	HT200
13	轴承	
12	O形密封圈	NBR
11	油室	HT200
10	双端面机械密封	
9	机械密封压板	304
8	O形密封圈	NBR
7	泵盖	HT200
6	骨架油封	
5	叶轮	HT200
4	出水接头	HT200
3	橡胶垫圈	NBR
2	泵体	HT200
1	底座	HT200

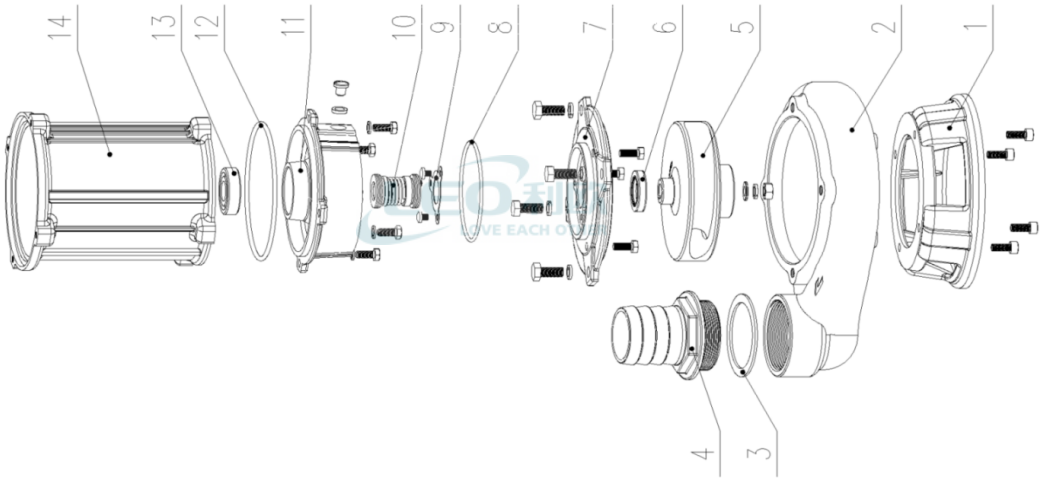

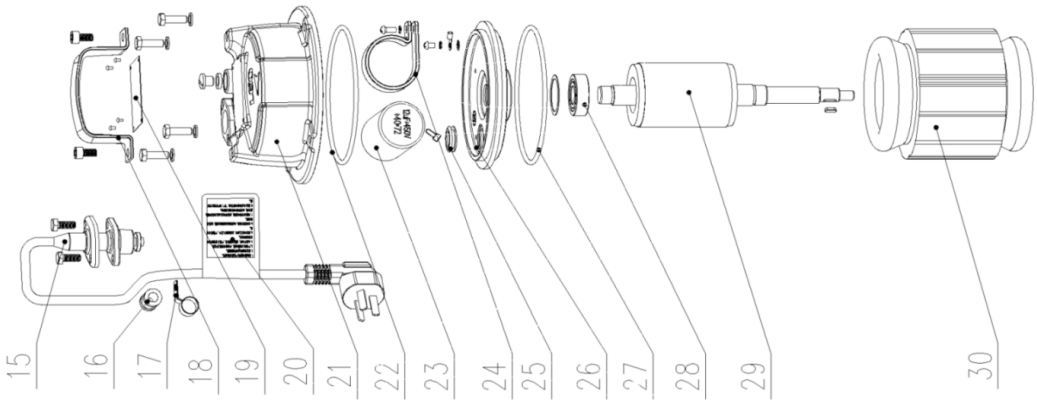

LEO 利欧	Physical picture 50WQD5-7-0.25M	Manufacturer	LEO
		Address	China,Zhejiang,Wenling
		Contact	0576-89988888
		Date	2024/04/27
Project Name		Client Name	Heatinvest
		Client Addr.	
Item NO		Contacts	
		Contact	