LEO 利欧	**Product Information** **XST65-200K/185**	Manufacturer	LEO
		Address	China,Zhejiang,Wenling
		Contact	0576-89988888
		Date	2024/02/19
Project Name		Client Name	Heatinvest
		Client Addr.	
Item NO		Contacts	
		Contact	

Part NO.	XST65-200K/185
Product Picture	Note

Water supply: Water filtration and transportation, the main pipeline pressurization; Pressurization for high-rise buildings, hotels, etc.
Industry: Flushing and cleaning system, boiler feed water, cooling water circulation, water treatment system, equipment supporting system.
water treatment: Ultrafiltration system, reverse osmosis system, distillation system, separator,swimming pool.
Other: Air conditioning system; heating system; agricultural irrigation,fire fighting system

Nameplate parameters

flow	110 m³/h
head	39 m
Efficiency	71 %
speed	2900 rpm
number of stages	1

Technical

Flow range (m³/h)	11-147m3/h
Curve tolerance	ISO 9906 Annex A
Maximum lift (m)	41.2m
Maximum Altitude	1000m

Material

Impeller	HT200/06Cr19Ni10
Pump inlet	HT200
Pump shaft	45/06Cr19Ni10
Fan cover	
O-ring	NBR
Rear end cover	
Connector	HT200
Fan	
Cover box	
Supporting foot	
Guard plate	06Cr19Ni10

Working conditions

Medium temperature (°C)	-10°C+85°C
Max. ambient temperature (°C)	+40°C
Pumped medium	Liquid without solid particles and long fiberslow viscositynon-combustiblenon-corrosion liquid or other
Critical cavitation margin(m)	5m
Working pressure	12bar

Installation

Structure Type	Standard motor (sleeve shaft)
Connection method	Flange connection / thread-connection
Inlet diameter (mm)	DN80
Outlet diameter (mm)	DN65

Motor

Motor phase	Three phase

	Product Information XST65-200K/185	Manufacturer	LEO
		Address	China,Zhejiang,Wenling
		Contact	0576-89988888
		Date	2024/02/19
Project Name		Client Name	Heatinvest
		Client Addr.	
Item NO		Contacts	
		Contact	

Protection class	IP55
Motor poles	2
Insulation class	F
Motor power (KW)	18.5KW
Motor model	IE2-160L-2(B35)
Frequency	50Hz
Rated voltage (V)	380V
Rated current (A)	34.7A
Efficiency class	IE2
Power factor	

Seal

Mechanical seal	TF PB20-35

Weight/Packaging

Net weight (kg)	214kg
Gross weight (kg)	234kg
Package size	980x405x610mm

LEO 利欧
LOVE EACH OTHER

LEO 利欧	Performance Curve XST65-200K/185	Manufacturer	LEO
		Address	China,Zhejiang,Wenling
		Contact	0576-89988888
		Date	2024/02/19
Project Name		Client Name	Heatinvest
		Client Addr.	
Item NO		Contacts	
		Contact	

The hydraulic performance curve have been tested withWaterat°C,density 1000kg/m³,and at 1bar atmospherical pressure. GB32162016 Grande 3B

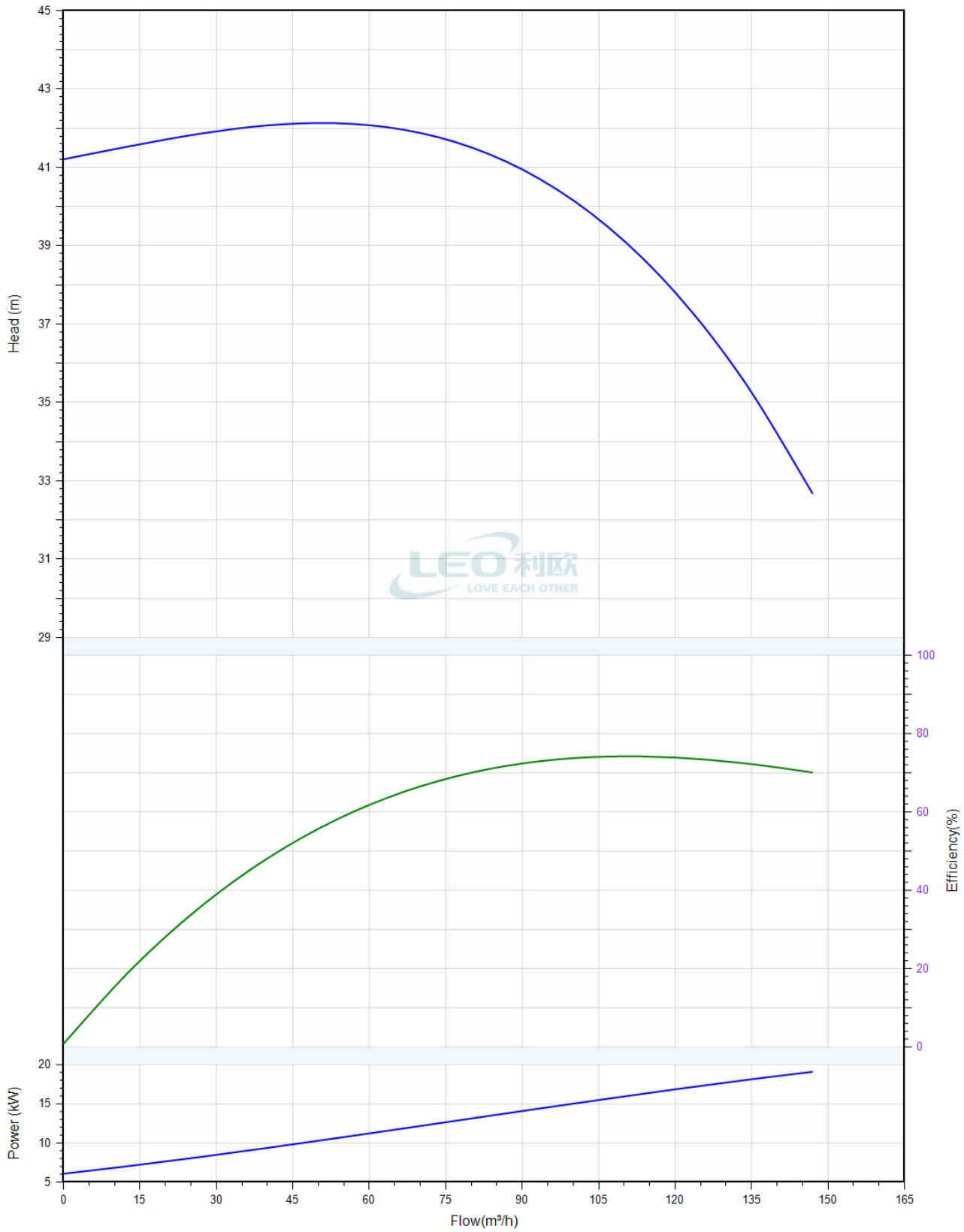

LEO 利欧	Pump Technical Parameters XST65-200K/185	Manufacturer	LEO
		Address	China,Zhejiang,Wenling
		Contact	0576-89988888
		Date	2024/02/19
Project Name		Client Name	Heatinvest
		Client Addr.	
Item NO		Contacts	
		Contact	

Rated parameters	
Pump model	XST65-200K/185
Part NO.	XST65-200K/185
Rated flow	110 m³/h
Rated head	39 m
Rated efficiency (%)	71
Power (kW)	16.5
NPSHr (m)	5
Speed (rpm)	2900

Medium	
Pumped medium	Water
Working temperature (°C)	20
Medium density (kg/m³)	1000
Viscosity (mm²/s)	1

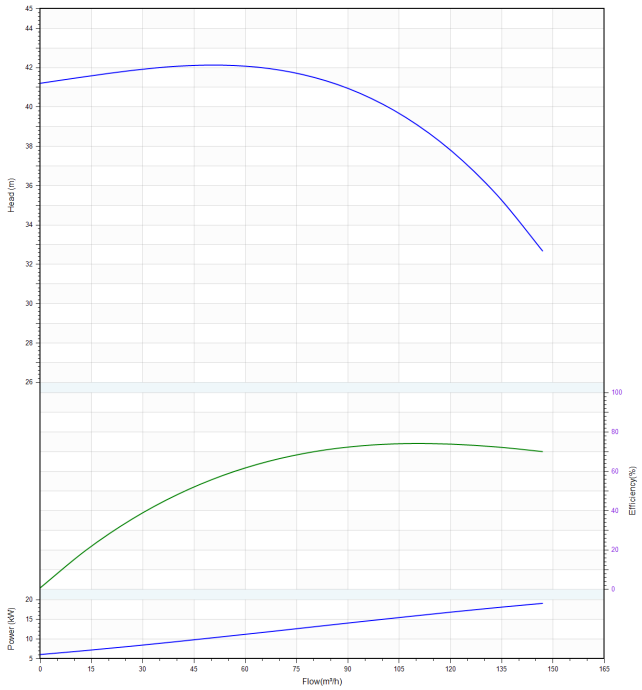

LEO 利欧
LOVE EACH OTHER

LEO 利欧	Structure picture XST65-200K/185	Manufacturer	LEO
		Address	China,Zhejiang,Wenling
		Contact	0576-89988888
		Date	2024/02/19
Project Name		Client Name	Heatinvest
		Client Addr.	
Item NO		Contacts	
		Contact	

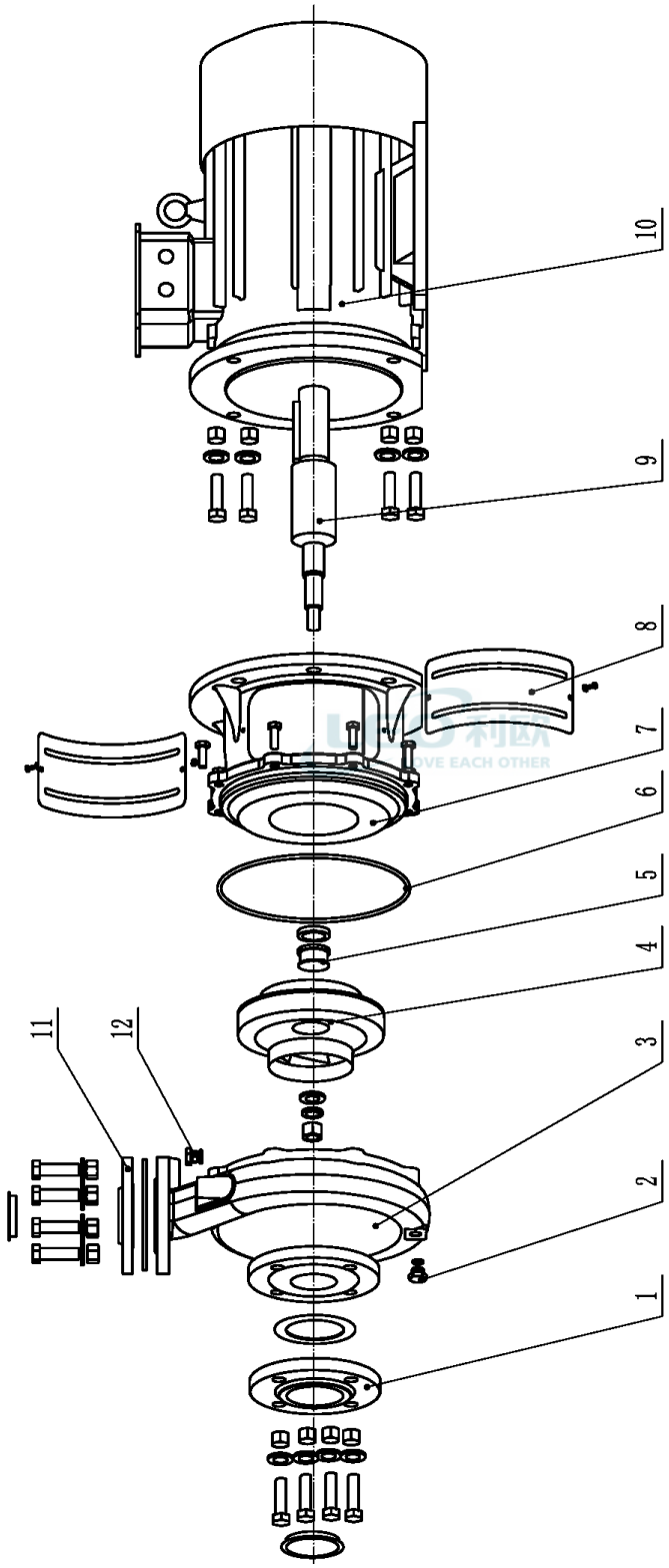

1、Inlet flange 2、Drain plug 3、Pump body 4、Impeller 5、Mechanical seal 6、O-ring
7、Support 8、Guard 9、Pump shaft 10、Motor 11、Outlet flange 12、Filling plug

LEO 利欧	Physical picture XST65-200K/185	Manufacturer	LEO
		Address	China,Zhejiang,Wenling
		Contact	0576-89988888
		Date	2024/02/19
Project Name		Client Name	Heatinvest
		Client Addr.	
Item NO		Contacts	
		Contact	