DAB WATER•TECHNOLOGY

KLME KLPE
DKLME DKLPE

IN-LINE PUMPS

KLME / KLPE / DKLME / DKLPE

ELECTRONIC IN-LINE PUMPS FOR CIRCULATION SYSTEMS

TECHNICAL DATA

Flow rate (range): from 2 m^3/h to 84 m^3/h
Head up to: 23,4 m
Type of pumped liquid: clean, free from solid or abrasive substances, non-viscous, non-aggressive, non-crystallized and chemically neutral.
Glycol percentage (maximum): 50%
Liquid temperature (range): from -15°C to +120°C
Maximum ambient temperature: +40°C
Operation pressure (maximum): 10 bar / 1000 kPa
Flanging or threading: DN 40, 50, 65, 80 with PN10, PN16 (4 hole)
Motor protection class: IPX5
Motor insulation class: F
Impeller material: technopolymer
Single phase power input: 230 V 50 Hz
Three phase power input: 3x230 V 50 Hz / 3x400 V 50 Hz
RPM: 2950 for KLPE - 1400 for KLME
Type of installation: fixed in horizontal position

Electronic in-line pumps for water circulation in conditioning and heating systems, even in the presence of solar thermal panels (solar collectors) and for circulation of drinkable hot water in commercial building service. Twin version are the one with the D letter, they have the possibility of alternating or simultaneous operation. Possibility of remote control thanks to the DConnect service (DConnect Box supplied separately).

CONSTRUCTION FEATURES OF THE PUMP

Pump body and motor support in cast iron. Flanged suction and delivery ports, threaded connectors for control pressure gauges. Compatibility with PN 16 counter-flanges (to facilitates the replacement of products in existing plants). Technopolymer impeller, carbon-ceramic mechanical seal. The versions with the letter D are twin pumps, also equipped with a swing valve incorporated in the outlet to prevent the recirculation of the water in the unit, as well as a blind flange for the maintenance of one of the two motors. These versions can work in simultaneous mode or with one of the two engines as a backup. On request are available:
threaded counter flanges DN 40, DN 50, DN 65 on PN 6
with welding collar DN 40, DN 50, DN 65 on PN 10 or PN 6 (4 holes)
with welding collar DN 80 on PN 10 or PN 16 (8 holes)

CONSTRUCTION FEATURES OF THE MOTOR

Four-pole asynchronous motor for KLME versions, KLPE with two-pole motor, both air-cooled. Motor shaft in AISI 316 stainless steel mounted on ball bearings. Single-phase version with capacitor and built-in thermo-amperometric protection.

CONSTRUCTION FEATURES OF THE ELECTRONIC

MCE-C variable frequency drive installed as standard for greater pump operating efficiency. It is equipped with a display for configuration and control. MEC-C is settable in pressure regulation mode, differentiates constant, constant curve, constant curve with external analogue signal, with the proportional differential pressure. The variable frequency drive allows energy savings and protection against water hammer. It must be mounted on the motor fan cover to take advantage of the cooling. It is possible to connect two MCE-C variable frequency drive together (through a special connection cable, supplied separately) for the creation of twin units. Compatible with the DConnect service.

DAB PUMPS reserves the right to make modifications without notice.

MATERIALS

N.	PARTS*	MATERIALS
1	PUMP BODY	CAST IRON 250 UNI ISO 185
3	SUPPORT	CAST IRON 250 UNI ISO 185
4	IMPELLER	TECHNOPOLYMER
7	SHAFT WITH ROTOR	AISI 316 STAINLESS STEEL
16	MECHANICAL SEAL	SILICON CARBIDE / SILICON CARBIDE
28	OR RING	EPDM RUBBER

* In contact with the liquid

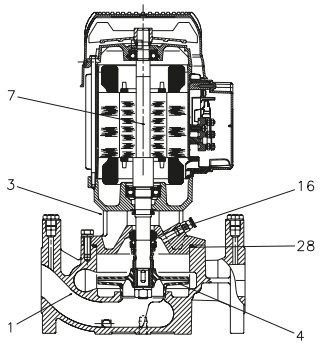

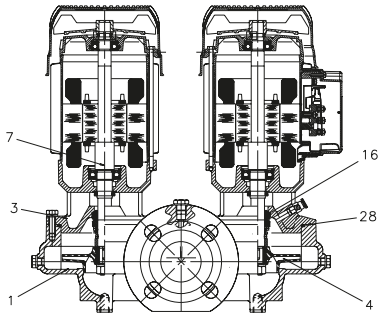

– Legend:
(example)

D KL P E 80 / 1200 M MCE 11 C

- Twin version
- Series
- M = 4-pole motor / P = 2-pole motor
- E = motor complete with MCE/C inverter
- (DN) nominal diameter of the flanged ports
- Maximum head (cm)
- M = single-phase motor / T = three-phase motor
- MCE = DAB inverter
- 11 = P. max in Kw x 10
- C = Circulation version

Installation: horizontal or vertical position, provided that the motor is always above the pump.

KLME / KLPE

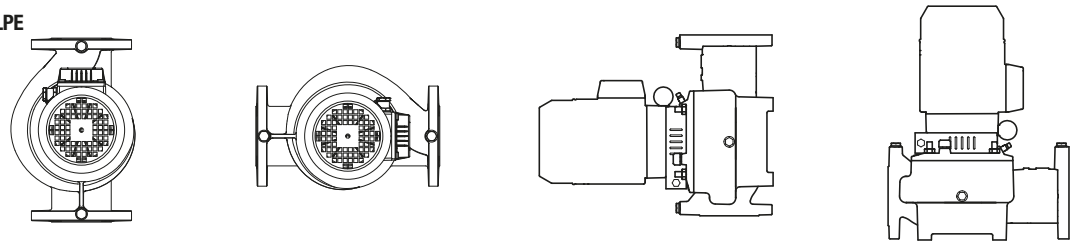

DKLME / DKLPE

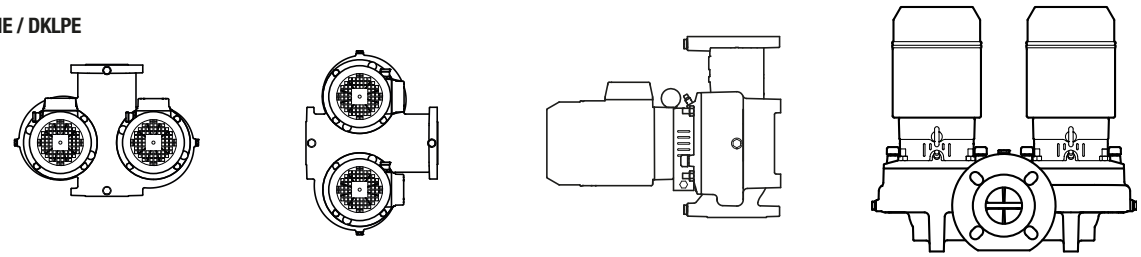

MCE/C INVERTER

MODES OF OPERATION

All the functions listed below can be consulted by the users (including less experienced ones) by simply scrolling through the MCE/C menu. The calibration and the modification of the parameters are protected, and can only be completed by expert users.

1 - ΔP-c constant differential pressure adjustment mode

The **Δ**P-c adjustment mode keeps the differential pressure of the system constantly at the H (setp) value set, even in case of variation of the flow rate. This is the standard adjustment used. It can be set directly from the MCE/C control panel. The inverter keeps the differential pressure (H setp) constant even in case of flow variation.

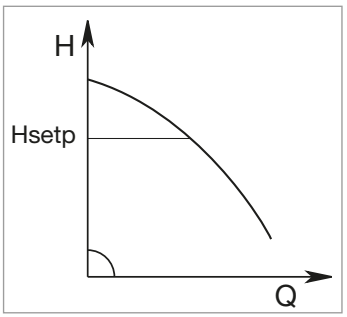

This adjustment is particularly indicated for the following systems:
a. two-pipe heating systems with thermostat valves
b. underfloor heating systems with thermostat valves
c. single-pipe heating systems with thermostat valves and calibration valves
d. systems with primary circuit pumps

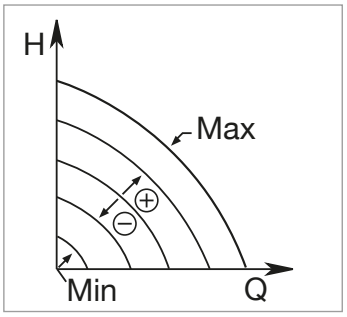

2 - Constant curve adjustment modes
2.1 - Constant curve adjustment

The rotation speed is kept at a constant number of revolutions. This rotation speed can be set between a minimum value and the nominal frequency of the circulation pump (e.g. between 15 Hz and 50 Hz). This mode can be set using the control panel on the MCE cover.

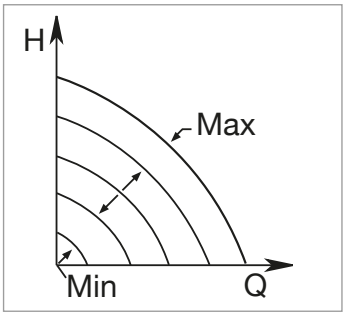

2.2 - Adjustment of the constant curve with external analogue signal

The rotation speed is kept at a constant number of revolution in proportion with the voltage of the external analogue signal.
The rotation speed changes in a linear way, between the nominal frequency of the pump when Vin = 10 V, and the minimum frequency when Vin = 0 V.
This mode can be set using the control panel on the MCE cover.

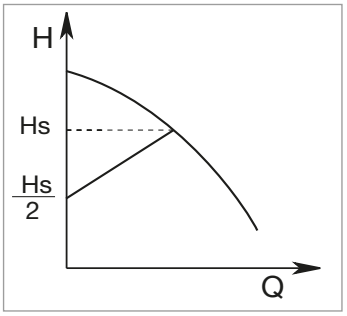

3 - ΔP-v * proportional differential pressure adjustment mode

With ΔP-v adjustment mode, with the variation of the flow rate, the value of the delivery of the head also varies in a linear manner, from Hsetp to Hsetp/2.

* in order to know the availability of the function on specific models contact our customer service.

For more information refer to the technical appendix.

PERFORMANCE RANGE

The performance curves are based on kinematic viscosity values = 1 mm²/s and density equal to 1000 kg/m³. Curve tolerance according to ISO 9906.

GRAPHIC SELECTION TABLE

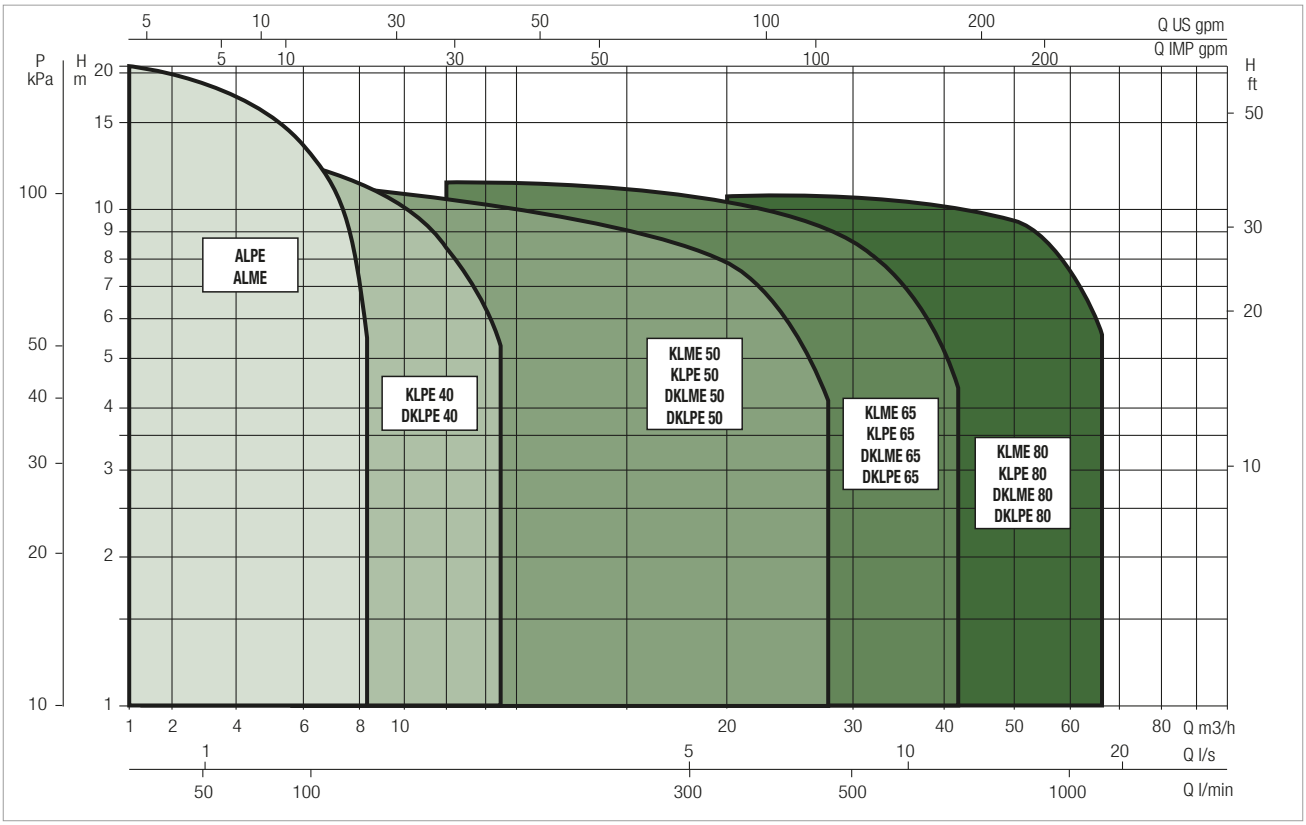

MODEL	P2 NOMINAL		Q (m³/h)	0	2,4	3,6	4,8	6	7,2	8,4	9,6	12	14,4	16,8	18	24	30	36	48	60	72	84
	kW	HP	Q (l/min)	0	40	60	80	100	120	140	160	200	240	280	300	400	500	600	800	1000	1200	1400
KLPE 40-600	0,3	0,4	H (m)	8,3	8,2	8	7,9	7,7	7,3	7	6,6	5,4	3,8	2	-	-	-	-	-	-	-	-
KLPE 40-1200	0,54	0,7		13,9	13,4	13,2	13	12,6	12,2	11,8	11,3	9,9	8,2	6,2	5	-	-	-	-	-	-	-
KLPE 40-1800	0,85	1,2		18,8	18,3	18	17,6	17,2	16,7	16,2	15,6	14,1	12,4	10,3	9	2,2	-	-	-	-	-	-

MODEL	P2 NOMINAL		Q (m³/h)	0	2,4	3,6	4,8	6	7,2	8,4	9,6	12	14,4	16,8	18	24	30	36	48	60	72	84
	kW	HP	Q (l/min)	0	40	60	80	100	120	140	160	200	240	280	300	400	500	600	800	1000	1200	1400
DKLPE 40-600	0,3	0,4	H (m)	8,3	8	7,8	7,5	7,1	6,6	6	5,4	3,9	1,9	-	-	-	-	-	-	-	-	-
DKLPE 40-1200	0,54	0,7		14,3	13,9	13,6	13,2	12,8	12,3	11,8	11,1	9,4	7,5	5,3	4,1	-	-	-	-	-	-	-
DKLPE 40-1800	0,85	1,2		19,1	18,6	18,2	17,8	17,3	16,7	16,1	15,4	13,6	11,5	9,1	7,7	-	-	-	-	-	-	-

MODEL	P2 NOMINAL		Q (m³/h)	0	2,4	3,6	4,8	6	7,2	8,4	9,6	12	14,4	16,8	18	24	30	36	48	60	72	84
	kW	HP	Q (l/min)	0	40	60	80	100	120	140	160	200	240	280	300	400	500	600	800	1000	1200	1400
KLME 50-600	0,22	0,3	H (m)	5,8	5,8	5,7	5,6	5,5	5,3	5,2	5	4,5	4	3,2	2,8	-	-	-	-	-	-	-
KLPE 50-1200	0,72	1		12,2	12,2	12,2	12,1	12	11,9	11,7	11,5	11	10,3	9,5	9,1	6,6	3,8	-	-	-	-	-
KLPE 50-2000	1,83	2,5		23,4	23,3	23,2	23,2	23,1	22,9	22,8	22,4	21,8	21	20,6	18,2	15,2	12	-	-	-	-	-

SELECTION TABLE - KLME / KLPE - DKLME / DKLPE

MODEL	P2 NOMINAL		Q (m³/h)	0	2,4	3,6	4,8	6	7,2	8,4	9,6	12	14,4	16,8	18	24	30	36	48	60	72	84
	kW	HP	Q (l/min)	0	40	60	80	100	120	140	160	200	240	280	300	400	500	600	800	1000	1200	1400
DKLME 50-600	0,22	0,3	H (m)	5,7	5,5	5,4	5,3	5,1	4,9	4,6	4,2	3,6	2,9	2	1,6	-	-	-	-	-	-	-
DKLPE 50-1200	0,72	1		12,3	12	11,9	11,7	11,5	11,3	11	10,8	10,1	9,3	8,4	7,9	5	-	-	-	-	-	-
DKLPE 50-2000	1,83	2,5		23,2	23	22,8	22,6	22,3	22	21,6	21,3	20,4	19,5	18,5	17,9	14,8	11,2	7	-	-	-	-

MODEL	P2 NOMINAL		Q (m³/h)	0	2,4	3,6	4,8	6	7,2	8,4	9,6	12	14,4	16,8	18	24	30	36	48	60	72	84
	kW	HP	Q (l/min)	0	40	60	80	100	120	140	160	200	240	280	300	400	500	600	800	1000	1200	1400
KLME 65-600	0,24	0,3	H (m)	5,1	5,1	5,1	5,1	5	5	4,9	4,8	4,5	4,2	3,8	3,6	2,1	-	-	-	-	-	-
KLPE 65-1200	1,1	1,5		12,3	12,3	12,3	12,3	12,3	12,2	12,2	12,2	12,2	12,1	12	12	11	9,2	6,8	-	-	-	-
KLPE 65-2000	2	2,7		20,6	20,7	20,7	20,7	20,7	20,7	20,6	20,6	20,5	20,3	20	19,8	18,8	17,2	15,1	9,7	-	-	-

MODEL	P2 NOMINAL		Q (m³/h)	0	2,4	3,6	4,8	6	7,2	8,4	9,6	12	14,4	16,8	18	24	30	36	48	60	72	84
	kW	HP	Q (l/min)	0	40	60	80	100	120	140	160	200	240	280	300	400	500	600	800	1000	1200	1400
DKLME 65-600	0,24	0,3	H (m)	5,1	5,1	5,1	5	5	4,8	4,7	4,5	4,2	3,8	3,3	3,1	1,7	-	-	-	-	-	-
DKLPE 65-1200	1,1	1,5		12,4	12,3	12,3	12,2	12,1	12,1	12	12	11,9	11,7	11,5	11,4	10,2	8,3	6	-	-	-	-
DKLPE 65-2000	2	2,7		20,4	20,2	20,1	20	20	20	19,9	19,8	19,7	19,4	19,1	19	17,5	15,5	13	7,8	-	-	-

MODEL	P2 NOMINAL		Q (m³/h)	0	2,4	3,6	4,8	6	7,2	8,4	9,6	12	14,4	16,8	18	24	30	36	48	60	72	84
	kW	HP	Q (l/min)	0	40	60	80	100	120	140	160	200	240	280	300	400	500	600	800	1000	1200	1400
KLME 80-600	0,75	1	H (m)	5,6	5,7	5,7	5,8	5,8	5,8	5,8	5,8	5,8	5,8	5,7	5,7	5,4	5	4,3	2,4	-	-	-
KLPE 80-1200	1,84	2,5		11,8	11,7	11,7	11,7	11,7	11,7	11,7	11,7	11,6	11,6	11,6	11,6	11,5	11,3	11	9,8	7,4	4,2	-
KLPE 80-2000	3,67	5		20,8	20,9	20,9	21	21	21	21	21	21,1	21,1	21,1	21,1	21,1	21	20,6	19,3	17,4	14,8	11,7

MODEL	P2 NOMINAL		Q (m³/h)	0	2,4	3,6	4,8	6	7,2	8,4	9,6	12	14,4	16,8	18	24	30	36	48	60	72	84
	kW	HP	Q (l/min)	0	40	60	80	100	120	140	160	200	240	280	300	400	500	600	800	1000	1200	1400
DKLME 80-600	0,75	1	H (m)	5,6	5,6	5,6	5,6	5,6	5,6	5,5	5,5	5,4	5,3	5,2	5	4,6	3,9	3,1	-	-	-	-
DKLPE 80-1200	1,84	2,5		11,9	11,8	11,8	11,8	11,7	11,7	11,6	11,6	11,5	11,3	11,2	11,1	10,5	9,7	8,8	4,5	3,9	-	-
DKLPE 80-2000	3,67	5		20,3	20,3	20,3	20,3	20,3	20,3	20,3	20,3	20,3	20,2	20,2	20,1	19,9	19,4	18,8	16,8	13,9	10,4	-

KLPE 40 - ELECTRONIC IN-LINE PUMPS FOR CIRCULATION SYSTEMS

Pumped liquid temperature range: from -15 °C to +120 °C - Maximum ambient temperature: +40°C

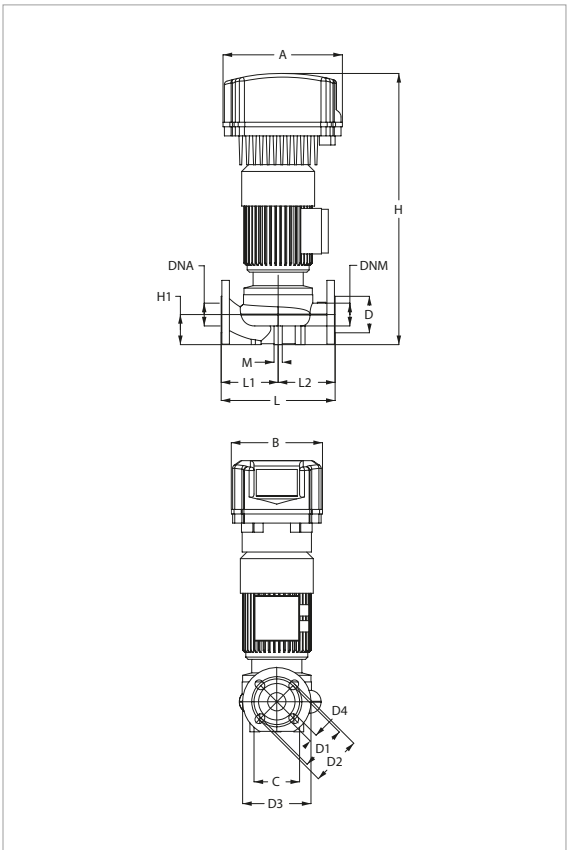

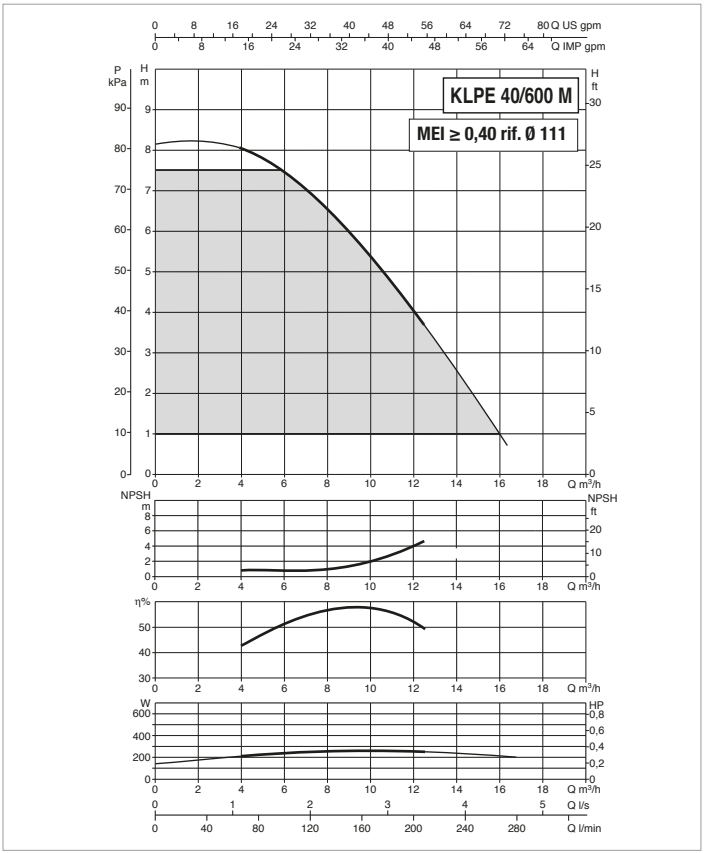

The MEI values for inverter controlled pumps refer to similar versions without electronics.

The performance curves are based on kinematic viscosity values = 1 mm^2/s and density equal to 1000 kg/m^3. Curve tolerance according to ISO 9906.

MODEL	ELECTRICAL DATA						
	POWER INPUT 50 Hz	POLES	n r.p.m.	P1 MAX kW	P2 NOMINAL		In A
					kW	HP	
KLPE 40-600 M MCE 11/C*	1x220-240 ~ V	2	2892	0,47	0,3	0,4	2,72

* ΔP-v proportional differential pressure adjustment mode also available.

MODEL	A	B	B1	B2	C	D	D1	D2	D3	D4	H	H1	I	L	L1	L2	M	DNA GAS	DNM GAS	PACKING DIMENSIONS			VOLUME (m^3)	WEIGHT Kg
																				L/A	L/B	H		
KLPE 40-600 M MCE 11/C	262	200	-	-	100	80	100	110	150	4 HOLES 18x23	603	66	-	250	125	125	2 HOLES M10	40	40	500	270	660	0,09	26

KLPE 40 - ELECTRONIC IN-LINE PUMPS FOR CIRCULATION SYSTEMS

Pumped liquid temperature range: from -15 °C to +120 °C - Maximum ambient temperature: +40°C

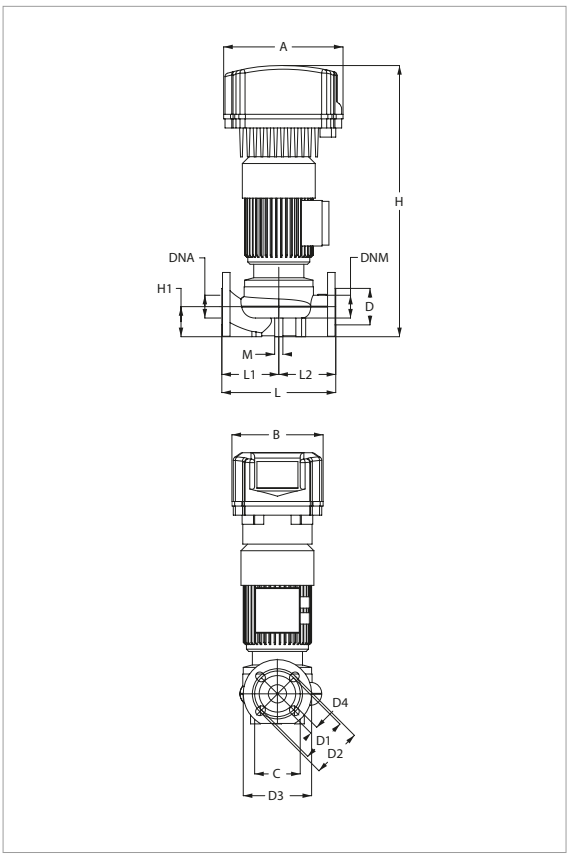

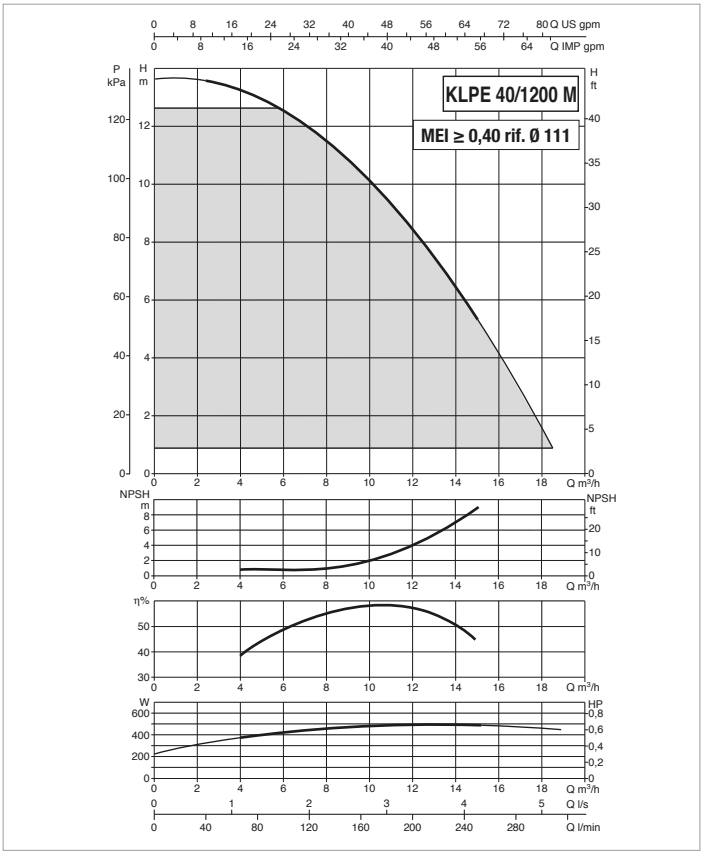

The MEI values for inverter controlled pumps refer to similar versions without electronics.

The performance curves are based on kinematic viscosity values = 1 mm^2/s and density equal to 1000 kg/m^3. Curve tolerance according to ISO 9906.

MODEL	ELECTRICAL DATA						
	POWER INPUT 50 Hz	POLES	n r.p.m.	P1 MAX kW	P2 NOMINAL		In A
					kW	HP	
KLPE 40-1200 M MCE 11/C*	1x220-240 ~ V	2	2727	0,85	0,54	0,7	4,73

* ΔP-v proportional differential pressure adjustment mode also available.

MODEL	A	B	B1	B2	C	D	D1	D2	D3	D4	H	H1	I	L	L1	L2	M	DNA GAS	DNM GAS	PACKING DIMENSIONS			VOLUME (m^3)	WEIGHT Kg
																				L/A	L/B	H		
KLPE 40-1200 M MCE 11/C	262	200	-	-	100	80	100	110	150	4 HOLES 18x23	603	66	-	250	125	125	2 HOLES M10	40	40	500	270	660	0,09	26

KLPE 40 - ELECTRONIC IN-LINE PUMPS FOR CIRCULATION SYSTEMS

Pumped liquid temperature range: from -15 °C to +120 °C - Maximum ambient temperature: +40°C

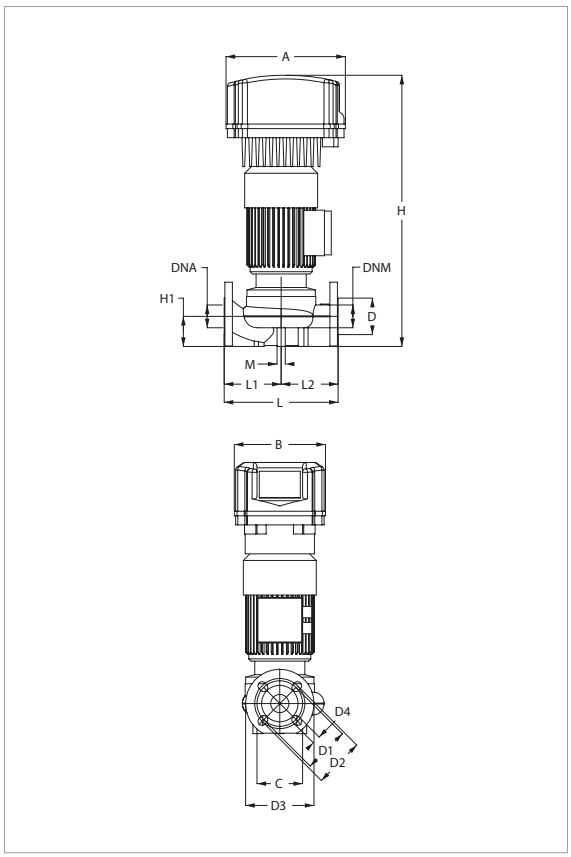

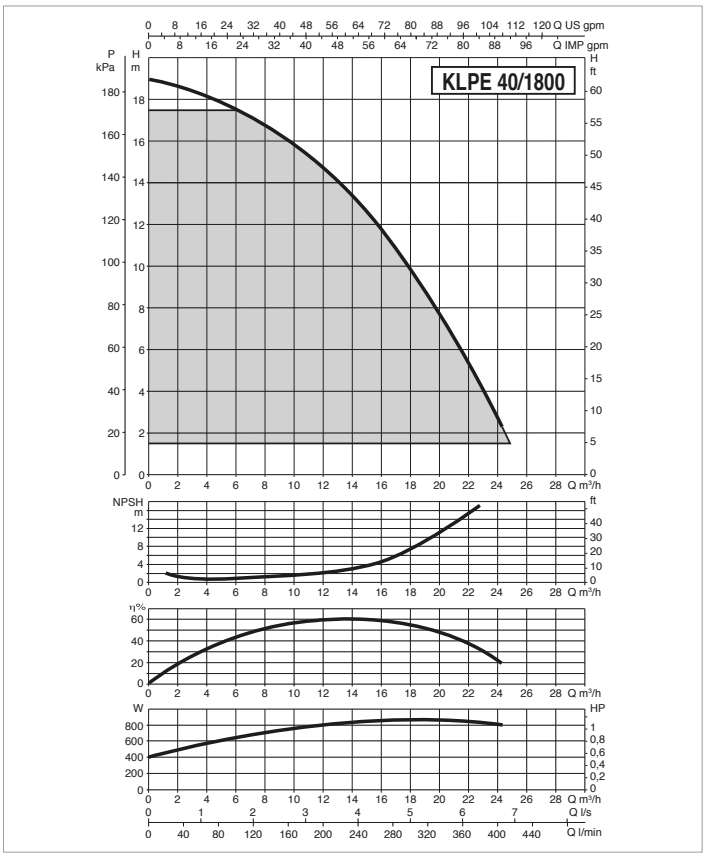

The MEI values for inverter controlled pumps refer to similar versions without electronics.

The performance curves are based on kinematic viscosity values = 1 mm^2/s and density equal to 1000 kg/m^3. Curve tolerance according to ISO 9906.

MODEL	ELECTRICAL DATA						
	POWER INPUT 50 Hz	POLES	n r.p.m.	P1 MAX kW	P2 NOMINAL		In A
					kW	HP	
KLPE 40-1800 M MCE 11/C*	1x220-240 ~ V	2	2808	1,05	0,85	1,2	5,78

* ΔP-v proportional differential pressure adjustment mode also available.

MODEL	A	B	B1	B2	C	D	D1	D2	D3	D4	H	H1	I	L	L1	L2	M	DNA GAS	DNM GAS	PACKING DIMENSIONS			VOLUME (m^3)	WEIGHT Kg
																				L/A	L/B	H		
KLPE 40-1800 M MCE 11/C	262	200	-	-	100	80	100	110	195	4 HOLES 18x23	602	66	-	250	125	125	2 HOLES M10	40	40	500	270	660	0,09	28

KLME / KLPE 50 - ELECTRONIC IN-LINE PUMPS FOR CIRCULATION SYSTEMS

Pumped liquid temperature range: from -15 °C to +120 °C - Maximum ambient temperature: +40°C

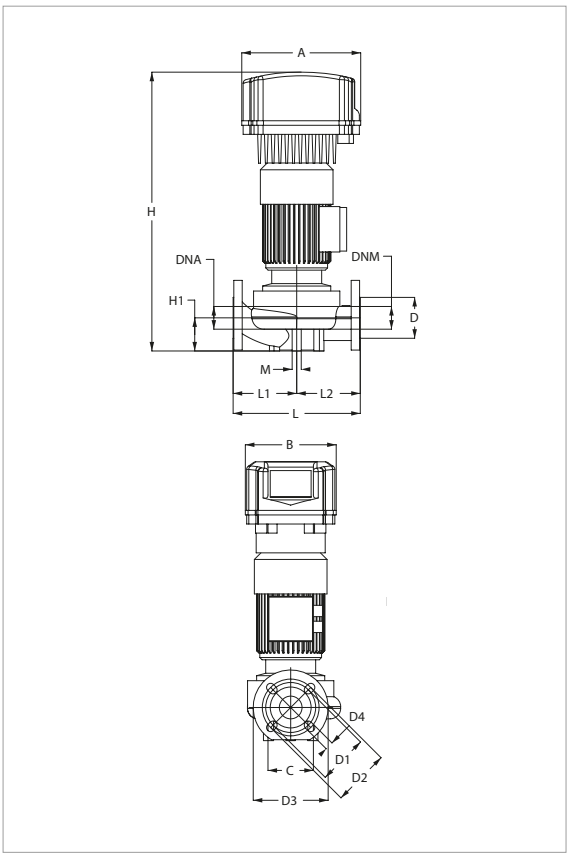

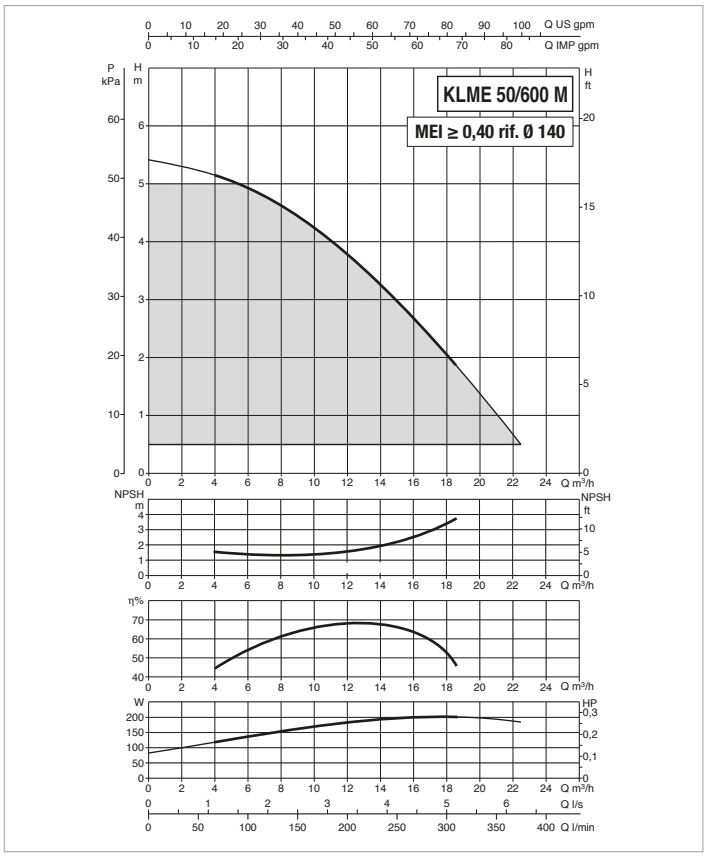

The MEI values for inverter controlled pumps refer to similar versions without electronics.

The performance curves are based on kinematic viscosity values = 1 mm^2/s and density equal to 1000 kg/m^3. Curve tolerance according to ISO 9906.

MODEL	ELECTRICAL DATA						
	POWER INPUT 50 Hz	POLES	n r.p.m.	P1 MAX kW	P2 NOMINAL		In A
					kW	HP	
KLME 50-600 M MCE 11/C*	1x220-240 ~ V	4	1390	0,35	0,22	0,3	2,08

* ΔP-v proportional differential pressure adjustment mode also available.

MODEL	A	B	B1	B2	C	D	D1	D2	D3	D4	H	H1	I	L	L1	L2	M	DNA GAS	DNM GAS	PACKING DIMENSIONS			VOLUME (m^3)	WEIGHT Kg
																				L/A	L/B	H		
KLME 50-600 M MCE 11/C	262	200	-	-	100	90	110	125	165	4 HOLES 18x23	622	73	-	280	140	140	2 HOLES M10	50	50	500	270	660	0,09	31

KLME / KLPE 50 - ELECTRONIC IN-LINE PUMPS FOR CIRCULATION SYSTEMS

Pumped liquid temperature range: from -15 °C to +120 °C - Maximum ambient temperature: +40°C

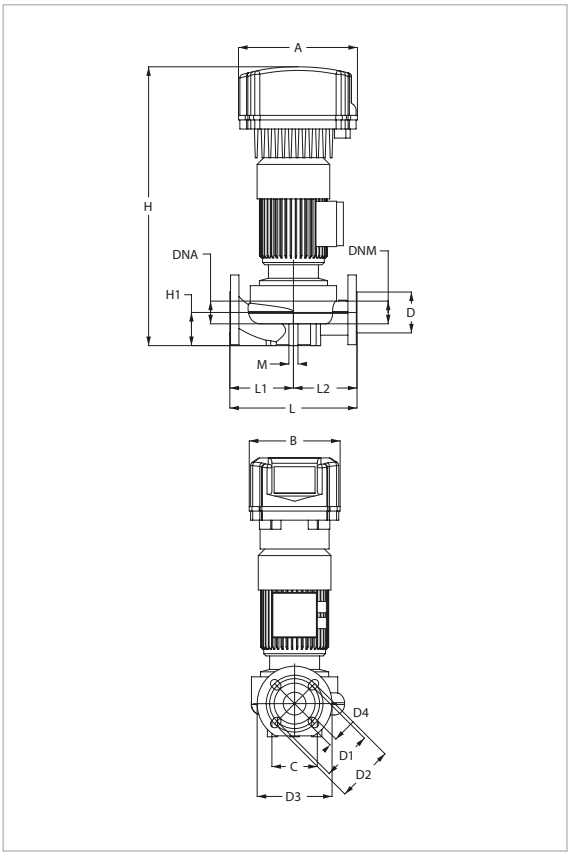

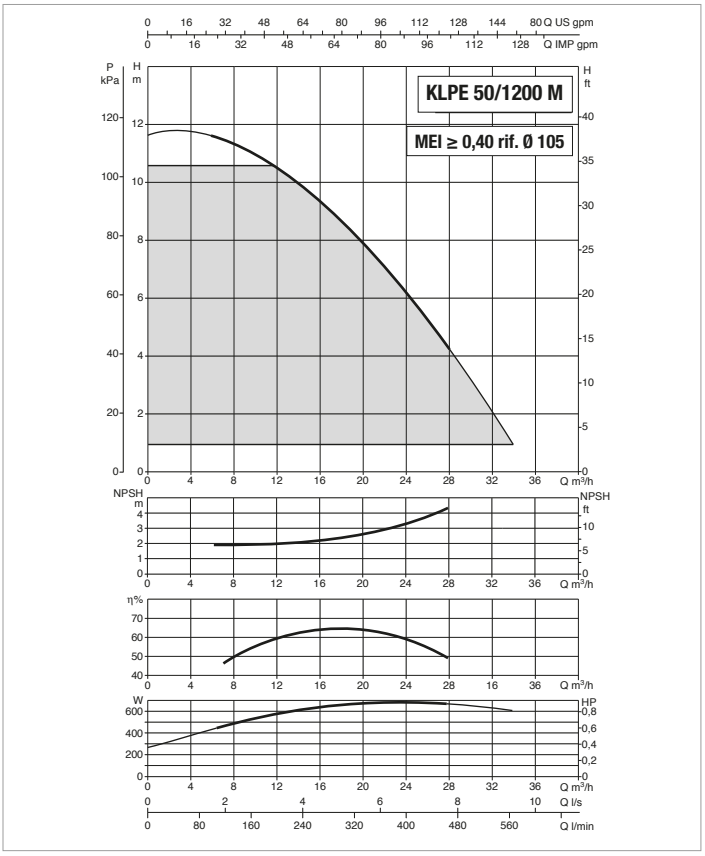

The MEI values for inverter controlled pumps refer to similar versions without electronics.

The performance curves are based on kinematic viscosity values = 1 mm^2/s and density equal to 1000 kg/m^3. Curve tolerance according to ISO 9906.

MODEL	ELECTRICAL DATA						
	POWER INPUT 50 Hz	POLES	n r.p.m.	P1 MAX kW	P2 NOMINAL		In A
					kW	HP	
KLPE 50-1200 M MCE 11/C*	1x220-240 ~ V	2	2813	0,92	0,72	1	5,14

* ΔP-v proportional differential pressure adjustment mode also available.

MODEL	A	B	B1	B2	C	D	D1	D2	D3	D4	H	H1	I	L	L1	L2	M	DNA GAS	DNM GAS	PACKING DIMENSIONS			VOLUME (m^3)	WEIGHT Kg
																				L/A	L/B	H		
KLPE 50-1200 M MCE 11/C	262	200	-	-	100	90	110	125	165	4 HOLES 18x23	622	73	-	280	140	140	2 HOLES M10	50	50	500	270	660	0,09	33

KLME / KLPE 50 - ELECTRONIC IN-LINE PUMPS FOR CIRCULATION SYSTEMS

Pumped liquid temperature range: from -15 °C to +120 °C - Maximum ambient temperature: +40°C

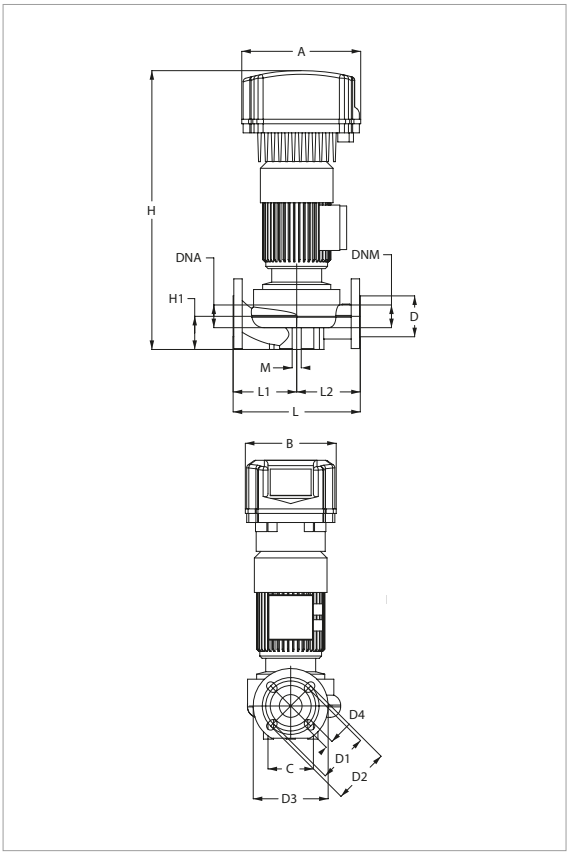

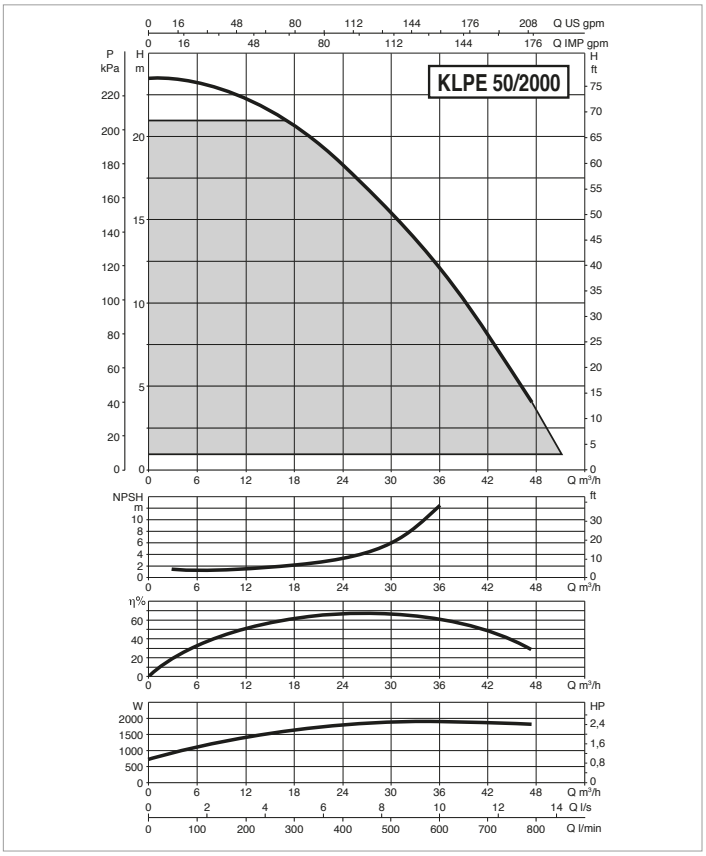

The MEI values for inverter controlled pumps refer to similar versions without electronics.

The performance curves are based on kinematic viscosity values = 1 mm^2/s and density equal to 1000 kg/m^3. Curve tolerance according to ISO 9906.

MODEL	ELECTRICAL DATA						
	POWER INPUT 50 Hz	POLES	n r.p.m.	P1 MAX kW	P2 NOMINAL		In A
					kW	HP	
KLPE 50-2000 M MCE 15/C*	1x220-240 ~ V	2	2778	2,34	1,83	2,5	12,8

* ΔP-v proportional differential pressure adjustment mode also available.

MODEL	A	B	B1	B2	C	D	D1	D2	D3	D4	H	H1	I	L	L1	L2	M	DNA GAS	DNM GAS	PACKING DIMENSIONS			VOLUME (m^3)	WEIGHT Kg
																				L/A	L/B	H		
KLPE 50-2000 M MCE 15/C	262	200	-	-	100	90	110	125	165	4 HOLES 18x25,5	628	73	-	280	140	140	2 HOLES M12	50	50	500	270	660	0,09	41

KLME / KLPE 65 - ELECTRONIC IN-LINE PUMPS FOR CIRCULATION SYSTEMS

Pumped liquid temperature range: from -15 °C to +120 °C - Maximum ambient temperature: +40°C

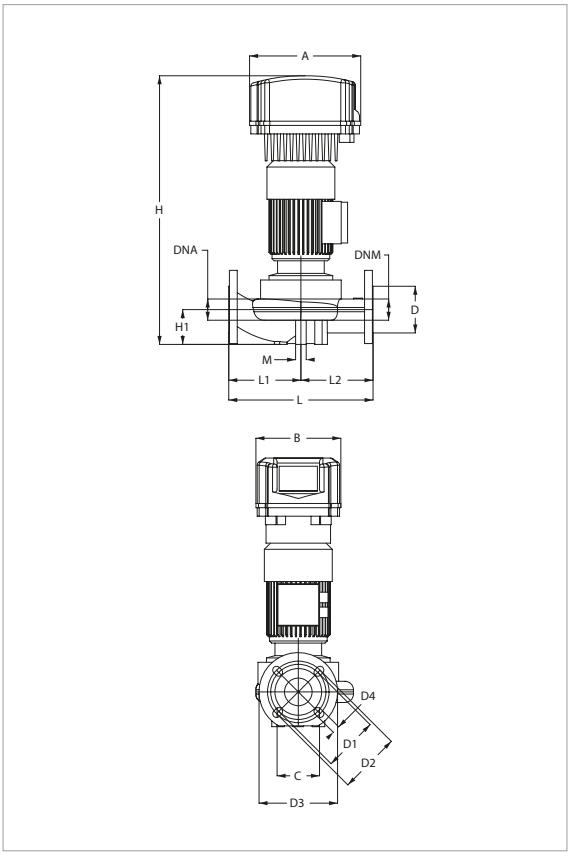

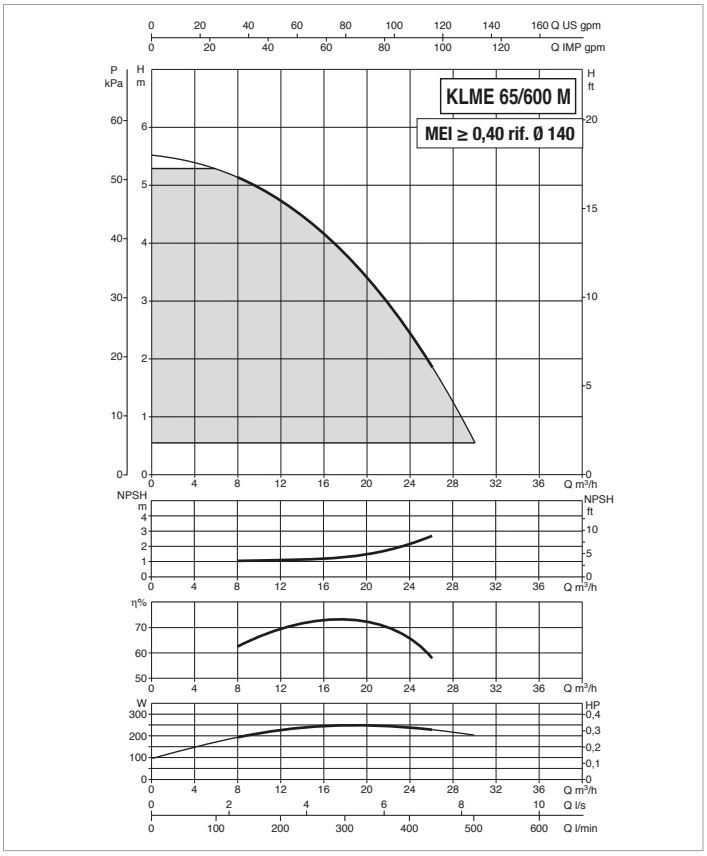

The MEI values for inverter controlled pumps refer to similar versions without electronics.

The performance curves are based on kinematic viscosity values = 1 mm^2/s and density equal to 1000 kg/m^3. Curve tolerance according to ISO 9906.

MODEL	ELECTRICAL DATA						
	POWER INPUT 50 Hz	POLES	n r.p.m.	P1 MAX kW	P2 NOMINAL		In A
					kW	HP	
KLME 65-600 M MCE 11/C*	1x220-240 ~ V	4	1376	0,37	0,24	0,3	2,23

* ΔP-v proportional differential pressure adjustment mode also available.

MODEL	A	B	B1	B2	C	D	D1	D2	D3	D4	H	H1	I	L	L1	L2	M	DNA GAS	DNM GAS	PACKING DIMENSIONS			VOLUME (m^3)	WEIGHT Kg
																				L/A	L/B	H		
KLME 65-600 M MCE 11/C	262	200	-	-	100	110	130	145	185	4 HOLES 18x23	641	82	-	340	170	170	2 HOLES M12	65	65	500	270	660	0,09	37

KLME / KLPE 65 - ELECTRONIC IN-LINE PUMPS FOR CIRCULATION SYSTEMS

Pumped liquid temperature range: from -15 °C to +120 °C - Maximum ambient temperature: +40°C

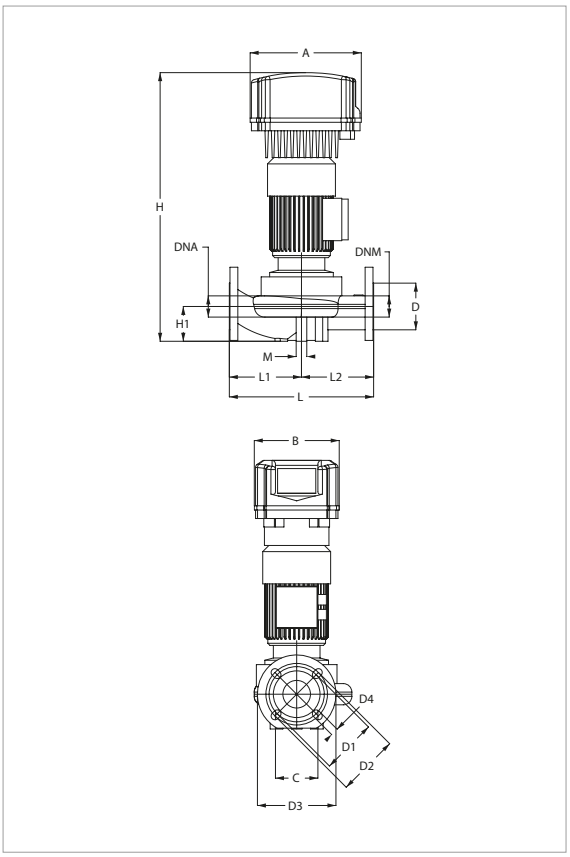

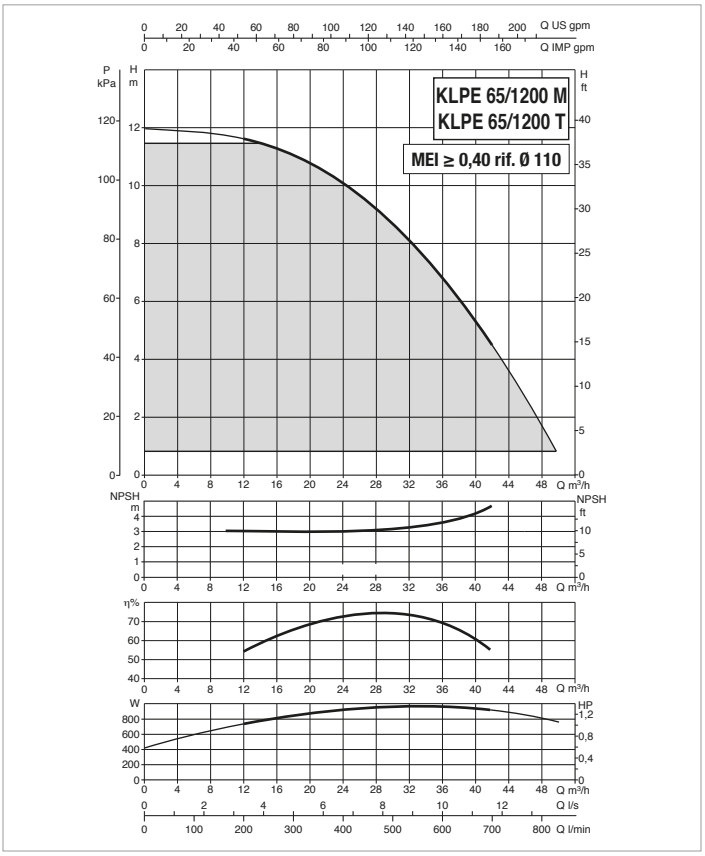

The MEI values for inverter controlled pumps refer to similar versions without electronics.

The performance curves are based on kinematic viscosity values = 1 mm^2/s and density equal to 1000 kg/m^3. Curve tolerance according to ISO 9906.

MODEL	ELECTRICAL DATA						
	POWER INPUT 50 Hz	POLES	n r.p.m.	P1 MAX kW	P2 NOMINAL		In A
					kW	HP	
KLPE 65-1200 M MCE 11/C*	1x220-240 ~ V	2	2880	1,37	1,1	1,5	10,7
KLPE 65-1200 T MCE 30/C	3x400 ~ V	2	2880	1,37	1,1	1,5	3,9

* ΔP-v proportional differential pressure adjustment mode also available.

MODEL	A	B	B1	B2	C	D	D1	D2	D3	D4	H	H1	I	L	L1	L2	M	DNA GAS	DNM GAS	PACKING DIMENSIONS			VOLUME (m^3)	WEIGHT Kg
																				L/A	L/B	H		
KLPE 65-1200 M MCE 11/C	262	200	-	-	100	110	130	145	185	4 HOLES 18x23	641	82	-	340	170	170	2 HOLES M12	65	65	500	270	660	0,09	43
KLPE 65-1200 T MCE 30/C	353	286	-	-	100	110	130	145	185		639	82	-	340	170	170		65	65	680	430	825	0,24	58

KLME / KLPE 65 - ELECTRONIC IN-LINE PUMPS FOR CIRCULATION SYSTEMS

Pumped liquid temperature range: from -15 °C to +120 °C - Maximum ambient temperature: +40°C

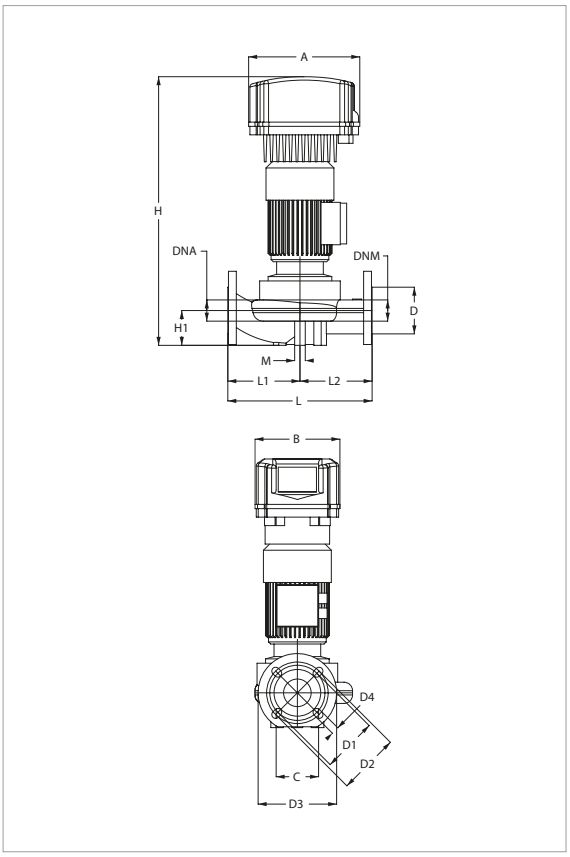

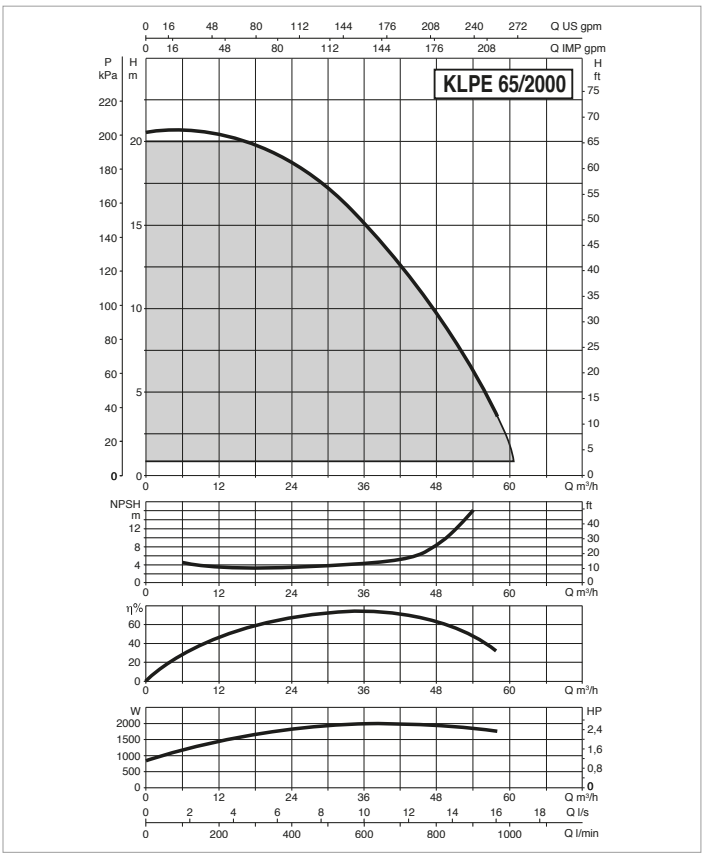

The MEI values for inverter controlled pumps refer to similar versions without electronics.

The performance curves are based on kinematic viscosity values = 1 mm^2/s and density equal to 1000 kg/m^3. Curve tolerance according to ISO 9906.

MODEL	ELECTRICAL DATA						
	POWER INPUT 50 Hz	POLES	n r.p.m.	P1 MAX kW	P2 NOMINAL		In A
					kW	HP	
KLPE 65-2000 M MCE 22/C*	1x220-240 ~ V	2	2767	2,49	2	2,7	18,8
KLPE 65-2000 T MCE 30/C	3x400 ~ V	2	2827	2,53	2	2,7	5,3

* ΔP-v proportional differential pressure adjustment mode also available.

MODEL	A	B	B1	B2	C	D	D1	D2	D3	D4	H	H1	I	L	L1	L2	M	DNA GAS	DNM GAS	PACKING DIMENSIONS			VOLUME (m^3)	WEIGHT Kg
																				L/A	L/B	H		
KLPE 65-2000 M MCE 22/C	262	200	-	-	100	110	130	145	185	4 HOLES 18x25,5	722	82	-	340	170	170	2 HOLES M12	65	65	500	270	660	0,09	47
KLPE 65-2000 T MCE 30/C	352	267	-	-	100	110	130	145	185		719	82	-	340	170	170		65	65	680	430	825	0,24	51

KLME / KLPE 80 - ELECTRONIC IN-LINE PUMPS FOR CIRCULATION SYSTEMS

Pumped liquid temperature range: from -15 °C to +120 °C - Maximum ambient temperature: +40°C

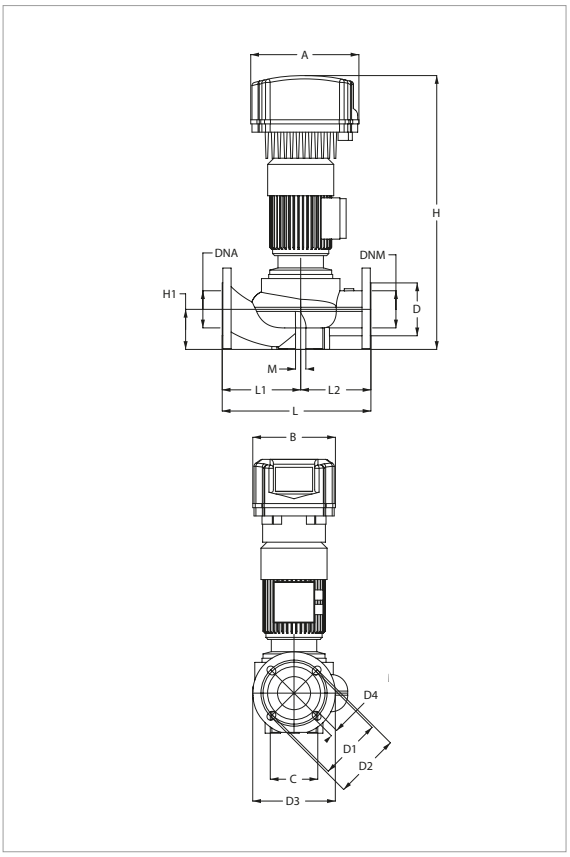

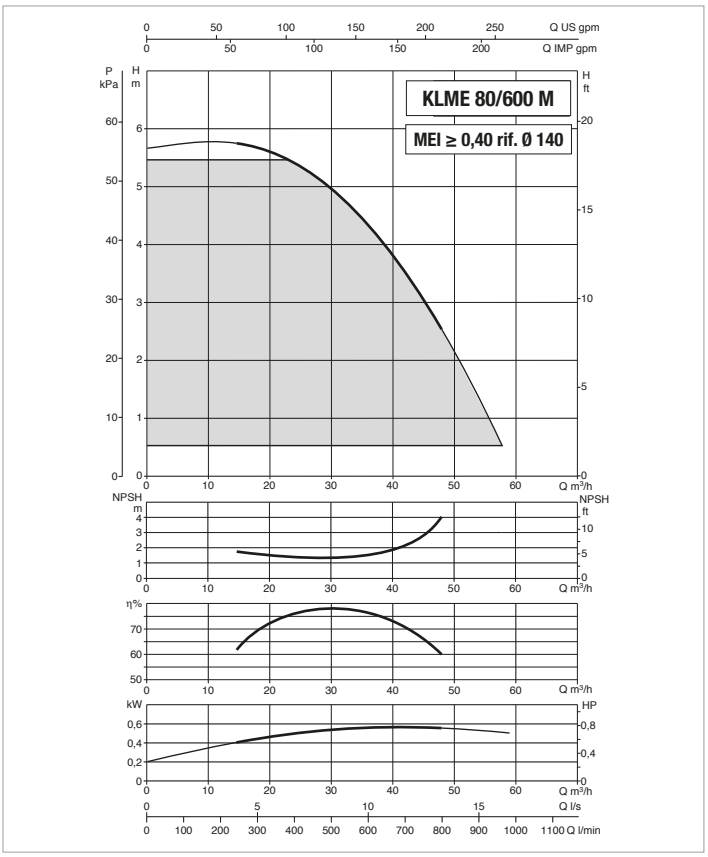

The MEI values for inverter controlled pumps refer to similar versions without electronics.

The performance curves are based on kinematic viscosity values = 1 mm^2/s and density equal to 1000 kg/m^3. Curve tolerance according to ISO 9906.

MODEL	ELECTRICAL DATA						
	POWER INPUT 50 Hz	POLES	n r.p.m.	P1 MAX kW	P2 NOMINAL		In A
					kW	HP	
KLME 80-600 M MCE 11/C*	1x220-240 ~ V	4	1440	0,79	0,75	1	7

* ΔP-v proportional differential pressure adjustment mode also available.

MODEL	A	B	B1	B2	C	D	D1	D2	D3	D4	H	H1	I	L	L1	L2	M	DNA GAS	DNM GAS	PACKING DIMENSIONS			VOLUME (m^3)	WEIGHT Kg
																				L/A	L/B	H		
KLME 80-600 M MCE 11/C	262	200	-	-	115	128	150	160	200	4 HOLES 18x23	671	97	-	360	190	170	2 HOLES M12	80	80	520	400	710	0,15	47

KLME / KLPE 80 - ELECTRONIC IN-LINE PUMPS FOR CIRCULATION SYSTEMS

Pumped liquid temperature range: from -15 °C to +120 °C - Maximum ambient temperature: +40°C

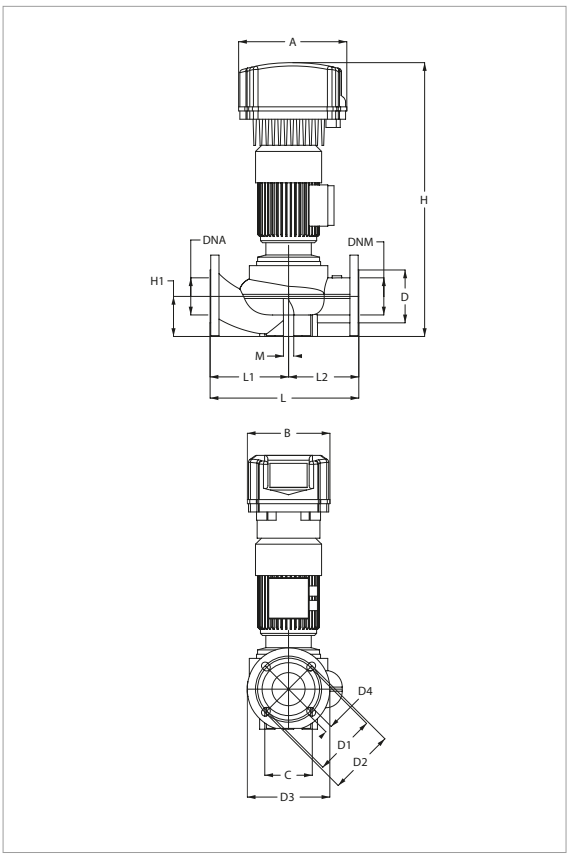

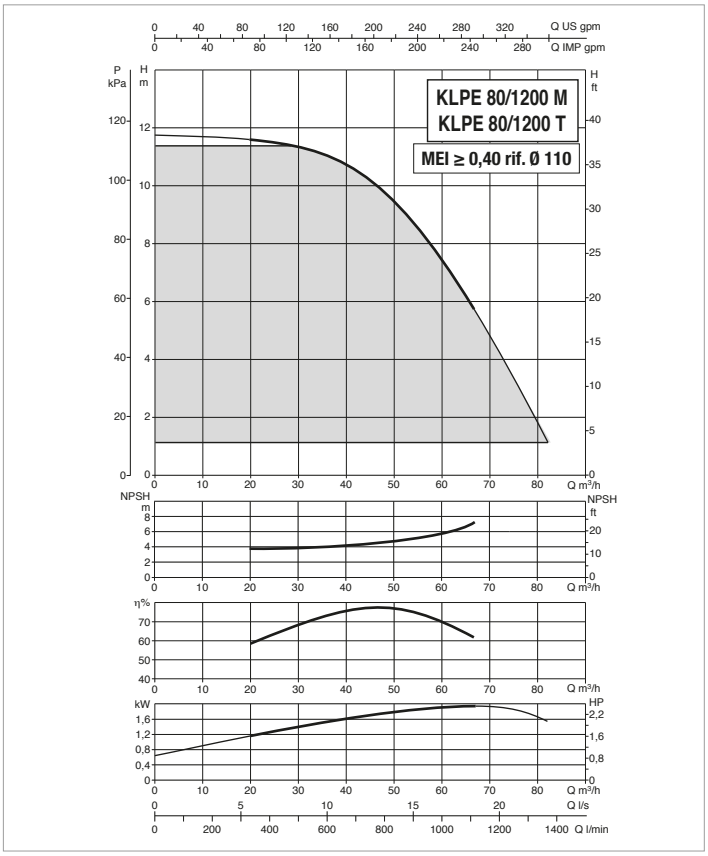

The MEI values for inverter controlled pumps refer to similar versions without electronics.

The performance curves are based on kinematic viscosity values = 1 mm^2/s and density equal to 1000 kg/m^3. Curve tolerance according to ISO 9906.

MODEL	ELECTRICAL DATA						
	POWER INPUT 50 Hz	POLES	n r.p.m.	P1 MAX kW	P2 NOMINAL		In A
					kW	HP	
KLPE 80-1200 M MCE 15/C*	1x220-240 ~ V	2	2840	2,21	1,84	2,5	16
KLPE 80-1200 T MCE 30/C*	3x400 ~ V	2	2840	2,21	1,84	2,5	4,8

* ΔP-v proportional differential pressure adjustment mode also available.

MODEL	A	B	B1	B2	C	D	D1	D2	D3	D4	H	H1	I	L	L1	L2	M	DNA GAS	DNM GAS	PACKING DIMENSIONS			VOLUME (m^3)	WEIGHT Kg
																				L/A	L/B	H		
KLPE 80-1200 M MCE 15/C	262	200	-	-	115	128	150	160	200	4 HOLES 18x23	746	97	-	360	190	170	2 HOLES M12	80	80	520	400	710	0,15	47
KLPE 80-1200 T MCE 30/C	353	286	-	-	115	128	150	160	200		743	97	-	360	190	170		80	80	520	290	450	0,07	52

KLME / KLPE 80 - ELECTRONIC IN-LINE PUMPS FOR CIRCULATION SYSTEMS

Pumped liquid temperature range: from -15 °C to +120 °C - Maximum ambient temperature: +40°C

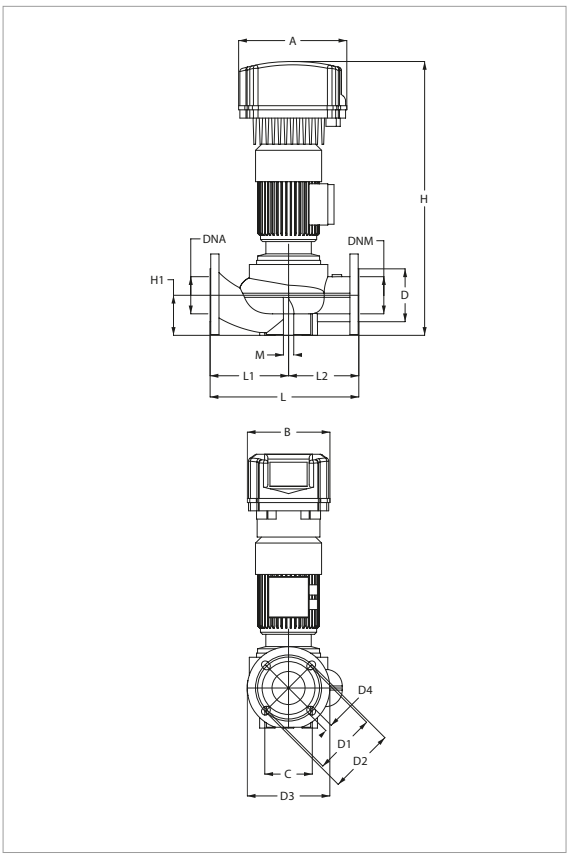

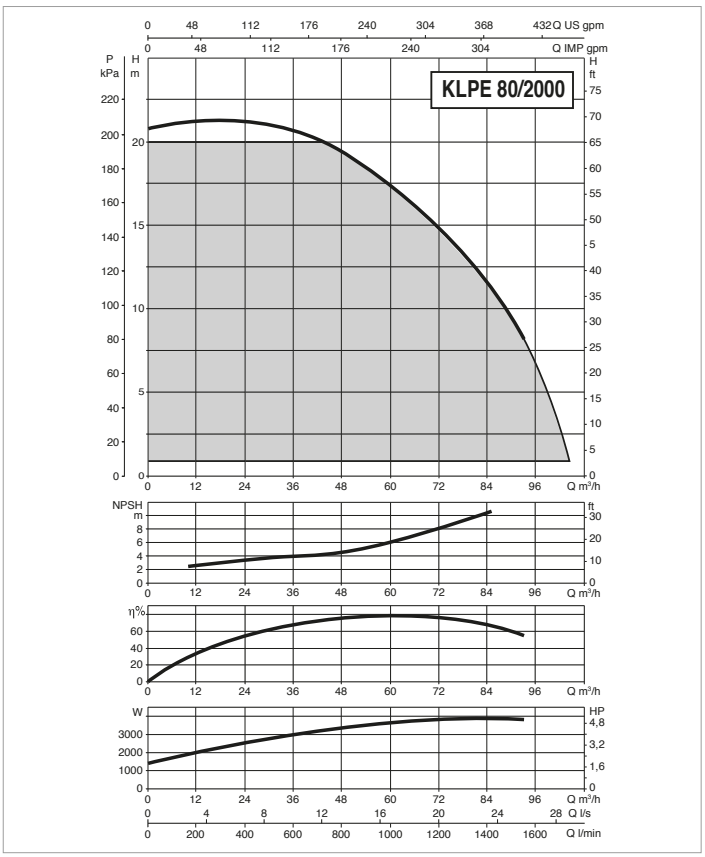

For the MEI index refer to the hydraulic data of the individual pump.

The performance curves are based on kinematic viscosity values = 1 mm^2/s and density equal to 1000 kg/m^3. Curve tolerance according to ISO 9906.

MODEL	ELECTRICAL DATA						
	POWER INPUT 50 Hz	POLES	n r.p.m.	P1 MAX kW	P2 NOMINAL		In A
					kW	HP	
KLPE 80-2000 T MCE 55/C*	3x400 ~ V	2	2864	4,84	3,67	5	9,07

* ΔP-v proportional differential pressure adjustment mode also available.

MODEL	A	B	B1	B2	C	D	D1	D2	D3	D4	H	H1	I	L	L1	L2	M	DNA GAS	DNM GAS	PACKING DIMENSIONS			VOLUME (m^3)	WEIGHT Kg
																				L/A	L/B	H		
KLPE 80-2000 T MCE 55/C	352	267	-	-	115	128	150	160	200	4 HOLES 18x23	722	97	-	360	190	170	2 HOLES M12	80	80	520	290	450	0,07	60

DKLPE 40 - ELECTRONIC IN-LINE PUMPS FOR CIRCULATION SYSTEMS

Pumped liquid temperature range: from -15 °C to +120 °C - Maximum ambient temperature: +40°C

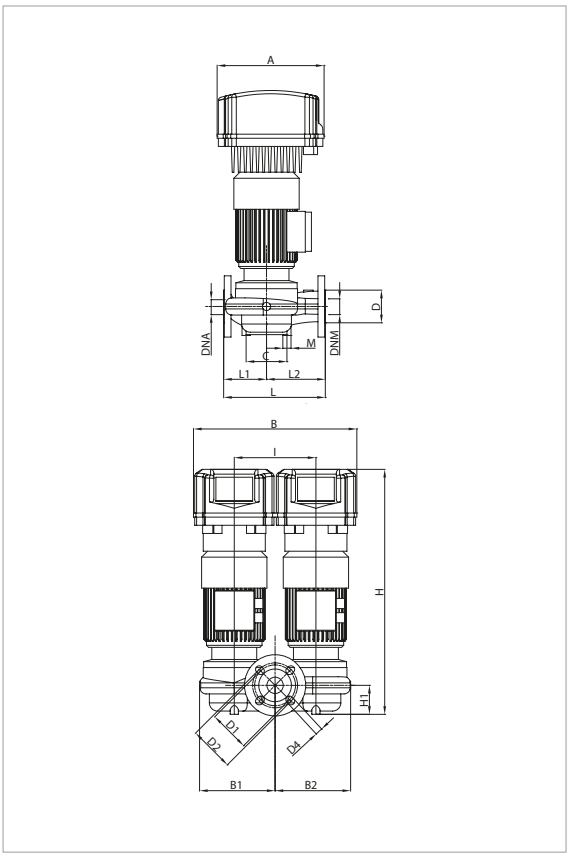

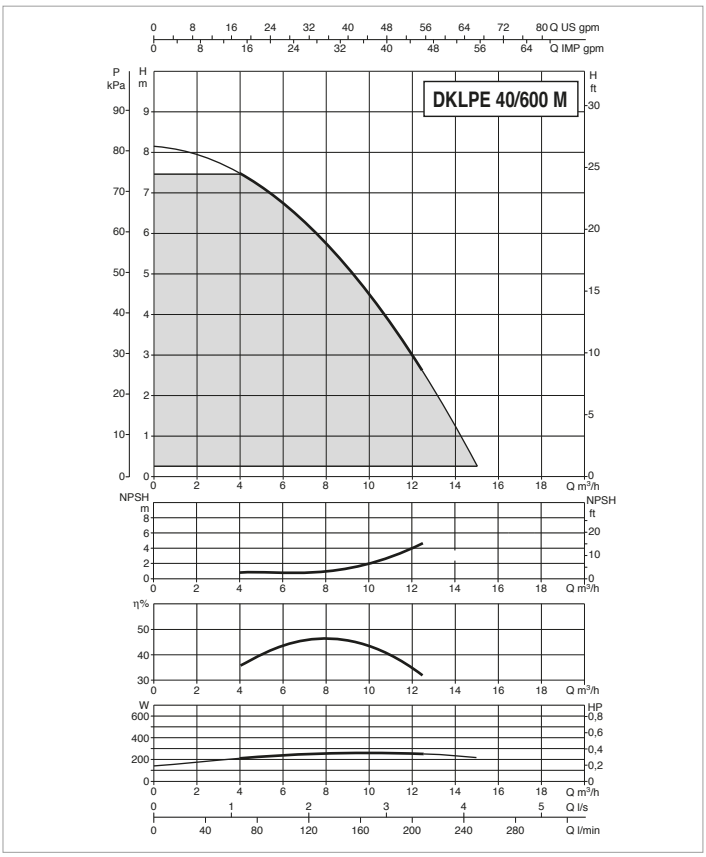

For the MEI index refer to the hydraulic data of the individual pump.

The performance curves are based on kinematic viscosity values = 1 mm^2/s and density equal to 1000 kg/m^3. Curve tolerance according to ISO 9906.

MODEL	ELECTRICAL DATA						
	POWER INPUT 50 Hz	POLES	n r.p.m.	P1 MAX kW	P2 NOMINAL		In A
					kW	HP	
DKLPE 40-600 M MCE 11/C*	1x220-240 ~ V	2	2892	0,47	0,3	0,4	2,72

* ΔP-v proportional differential pressure adjustment mode also available.

MODEL	A	B	B1	B2	C	D	D1	D2	D3	D4	H	H1	I	L	L1	L2	M	DNA GAS	DNM GAS	PACKING DIMENSIONS			VOLUME (m^3)	WEIGHT Kg
																				L/A	L/B	H		
DKLPE 40-600 M MCE 11/C	262	400	185	187	100	80	100	110	150	4 HOLES 18x23	608	66	200	250	105	145	2 HOLES M14	40	40	500	270	660	0,09	56

DKLPE 40 - ELECTRONIC IN-LINE PUMPS FOR CIRCULATION SYSTEMS

Pumped liquid temperature range: from -15 °C to +120 °C - Maximum ambient temperature: +40°C

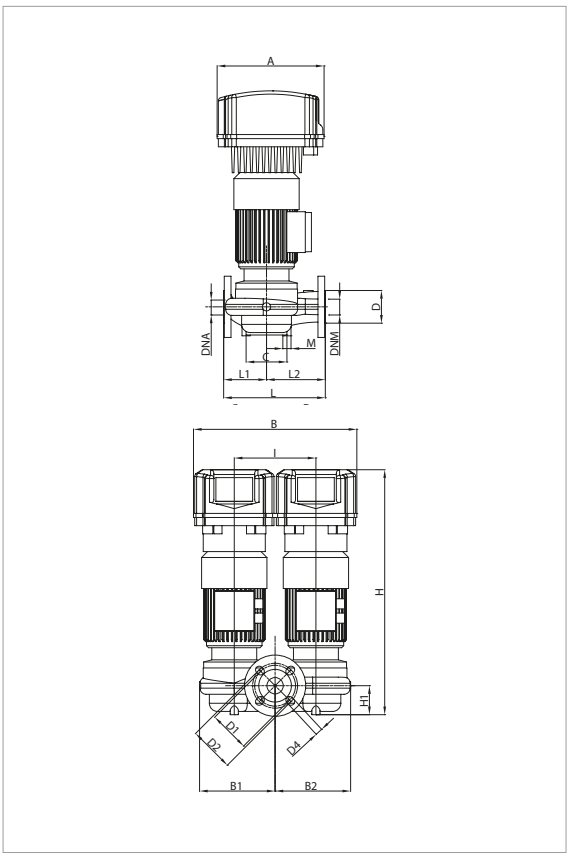

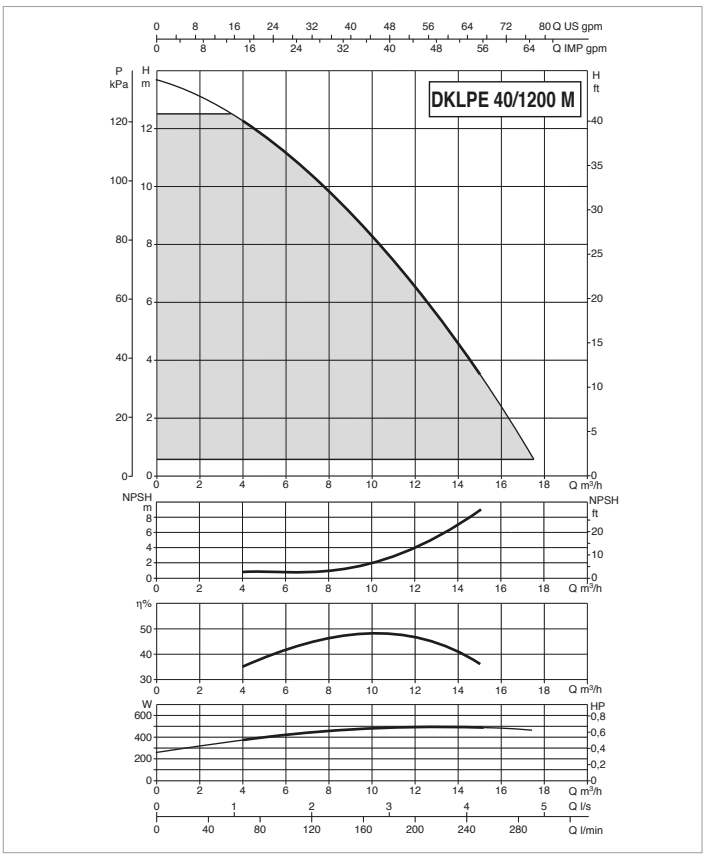

For the MEI index refer to the hydraulic data of the individual pump.

The performance curves are based on kinematic viscosity values = 1 mm^2/s and density equal to 1000 kg/m^3. Curve tolerance according to ISO 9906.

MODEL	ELECTRICAL DATA						
	POWER INPUT 50 Hz	POLES	n r.p.m.	P1 MAX kW	P2 NOMINAL		In A
					kW	HP	
DKLPE 40-1200 M MCE 11/C*	1x220-240 ~ V	2	2727	0,85	0,54	0,7	4,73

* ΔP-v proportional differential pressure adjustment mode also available.

MODEL	A	B	B1	B2	C	D	D1	D2	D3	D4	H	H1	I	L	L1	L2	M	DNA GAS	DNM GAS	PACKING DIMENSIONS			VOLUME (m^3)	WEIGHT Kg
																				L/A	L/B	H		
DKLPE 40-1200 M MCE 11/C	262	400	185	187	100	80	100	110	150	4 HOLES 18x23	608	66	200	250	105	145	2 HOLES M14	40	40	500	270	660	0,09	61

DKLPE 40 - ELECTRONIC IN-LINE PUMPS FOR CIRCULATION SYSTEMS

Pumped liquid temperature range: from -15 °C to +120 °C - Maximum ambient temperature: +40°C

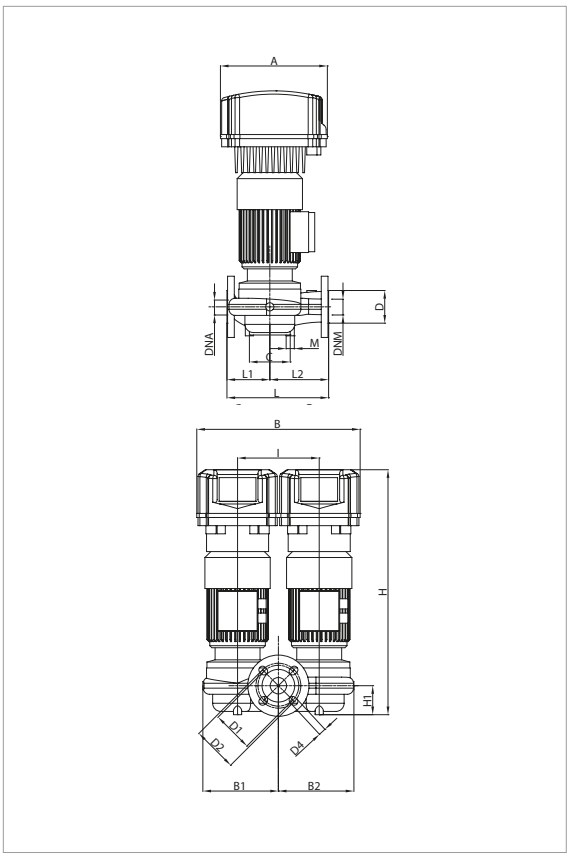

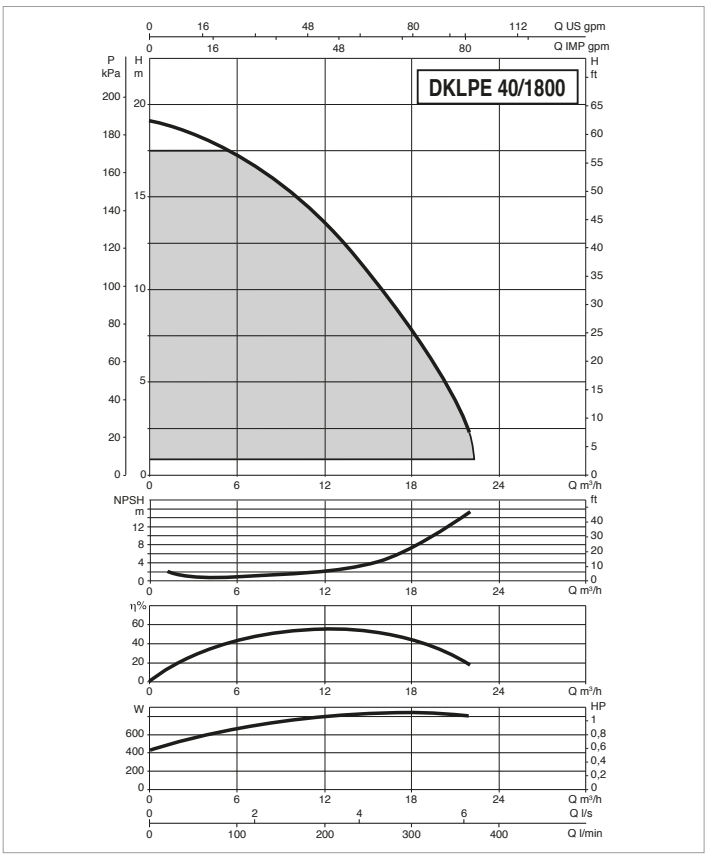

For the MEI index refer to the hydraulic data of the individual pump.

The performance curves are based on kinematic viscosity values = 1 mm^2/s and density equal to 1000 kg/m^3. Curve tolerance according to ISO 9906.

MODEL	ELECTRICAL DATA						
	POWER INPUT 50 Hz	POLES	n r.p.m.	P1 MAX kW	P2 NOMINAL		In A
					kW	HP	
DKLPE 40-1800 M MCE 11/C*	1x220-240 ~ V	2	2808	1,05	0,85	1,2	5,78

* ΔP-v proportional differential pressure adjustment mode also available.

MODEL	A	B	B1	B2	C	D	D1	D2	D3	D4	H	H1	I	L	L1	L2	M	DNA GAS	DNM GAS	PACKING DIMENSIONS			VOLUME (m^3)	WEIGHT Kg
																				L/A	L/B	H		
DKLPE 40-1800 M MCE 11/C	262	400	217	220	100	80	100	110	150	4 HOLES 18x23	602	66	220	250	115	135	4 HOLES M10	40	40	500	270	660	0,09	66

DKLME / DKLPE 50 - ELECTRONIC IN-LINE PUMPS FOR CIRCULATION SYSTEMS

Pumped liquid temperature range: from -15 °C to +120 °C - Maximum ambient temperature: +40°C

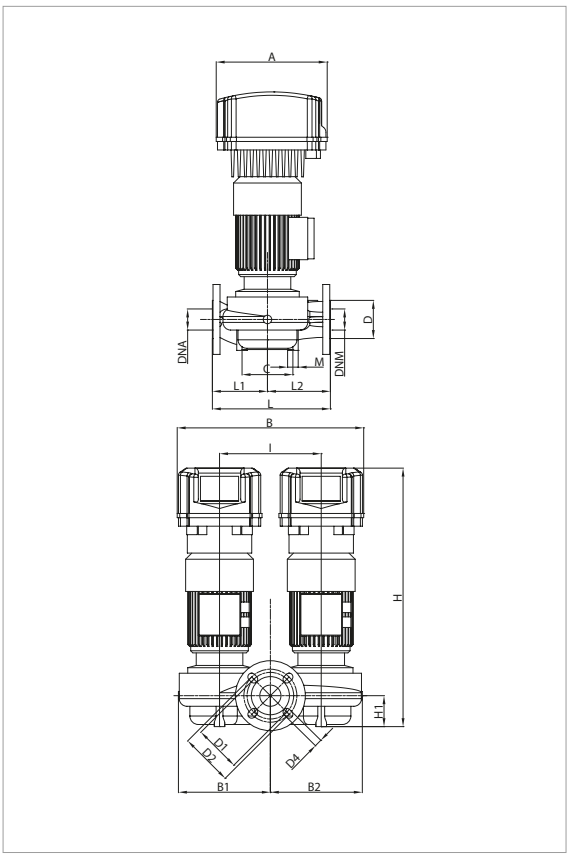

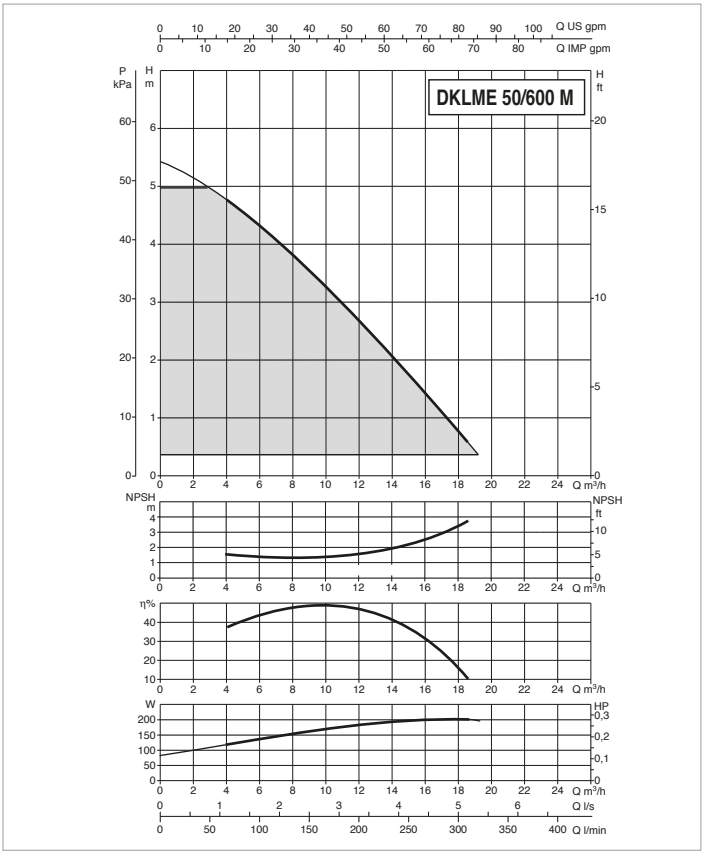

For the MEI index refer to the hydraulic data of the individual pump.

The performance curves are based on kinematic viscosity values = 1 mm^2/s and density equal to 1000 kg/m^3. Curve tolerance according to ISO 9906.

MODEL	ELECTRICAL DATA						
	POWER INPUT 50 Hz	POLES	n r.p.m.	P1 MAX kW	P2 NOMINAL		In A
					kW	HP	
DKLME 50-600 M MCE 11/C*	1x220-240 ~ V	4	1390	0,35	0,22	0,3	2,08

* ΔP-v proportional differential pressure adjustment mode also available.

MODEL	A	B	B1	B2	C	D	D1	D2	D3	D4	H	H1	I	L	L1	L2	M	DNA GAS	DNM GAS	PACKING DIMENSIONS			VOLUME (m^3)	WEIGHT Kg
																				L/A	L/B	H		
DKLME 50-600 M MCE 11/C	262	400	217	217	120	90	110	125	165	4 HOLES 18x23	622	73	200	280	130	150	2 HOLES M14	50	50	520	400	710	0,15	76

DKLME / DKLPE 50 - ELECTRONIC IN-LINE PUMPS FOR CIRCULATION SYSTEMS

Pumped liquid temperature range: from -15 °C to +120 °C - Maximum ambient temperature: +40°C

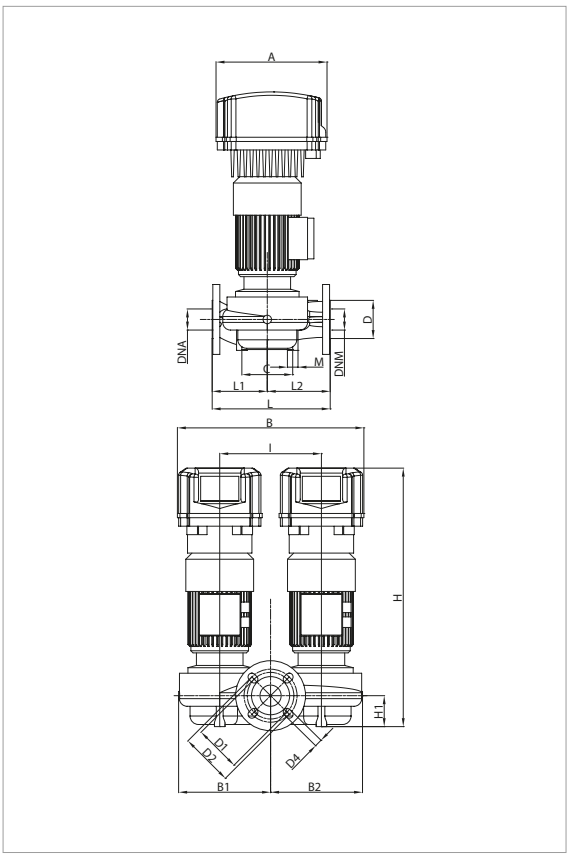

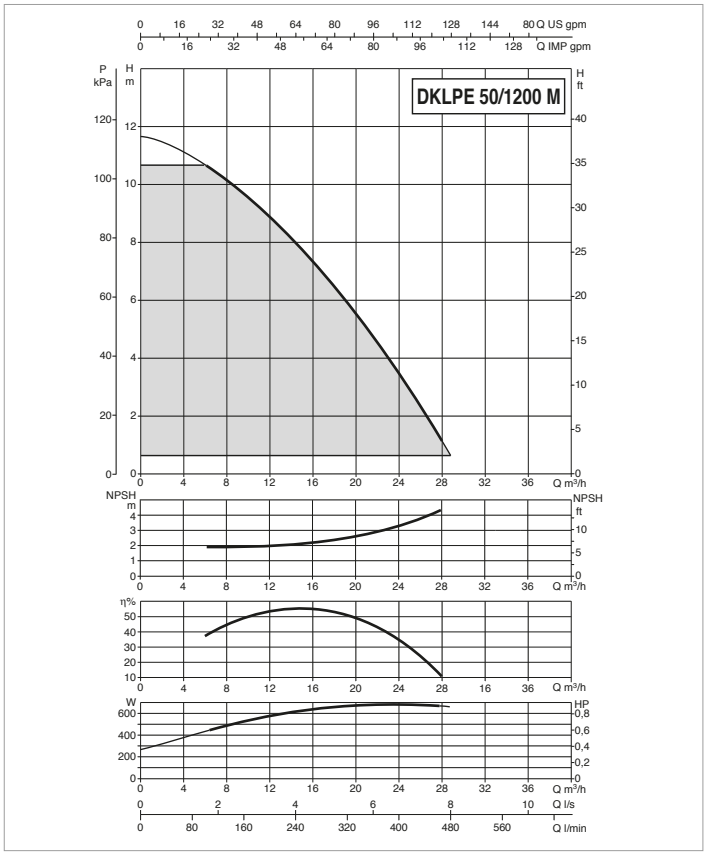

For the MEI index refer to the hydraulic data of the individual pump.

The performance curves are based on kinematic viscosity values = 1 mm^2/s and density equal to 1000 kg/m^3. Curve tolerance according to ISO 9906.

MODEL	ELECTRICAL DATA						
	POWER INPUT 50 Hz	POLES	n r.p.m.	P1 MAX kW	P2 NOMINAL		In A
					kW	HP	
DKLPE 50-1200 M MCE 11/C*	1x220-240 ~ V	2	2813	0,92	0,72	1	5,14

* ΔP-v proportional differential pressure adjustment mode also available.

MODEL	A	B	B1	B2	C	D	D1	D2	D3	D4	H	H1	I	L	L1	L2	M	DNA GAS	DNM GAS	PACKING DIMENSIONS			VOLUME (m^3)	WEIGHT Kg
																				L/A	L/B	H		
DKLPE 50-1200 M MCE 11/C	262	400	217	217	120	90	110	125	165	4 HOLES 18x23	622	73	200	280	130	150	2 HOLES M14	50	50	520	400	710	0,15	88

DKLME / DKLPE 50 - ELECTRONIC IN-LINE PUMPS FOR CIRCULATION SYSTEMS

Pumped liquid temperature range: from -15 °C to +120 °C - Maximum ambient temperature: +40°C

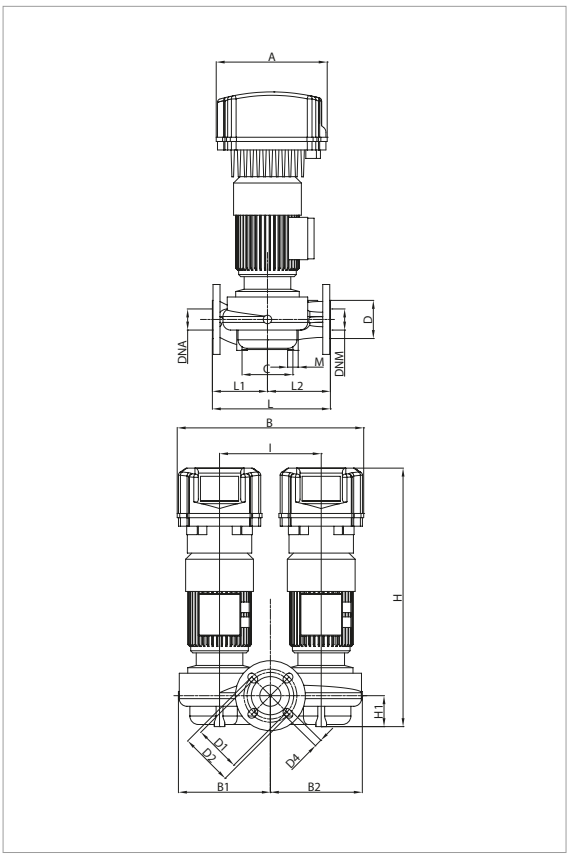

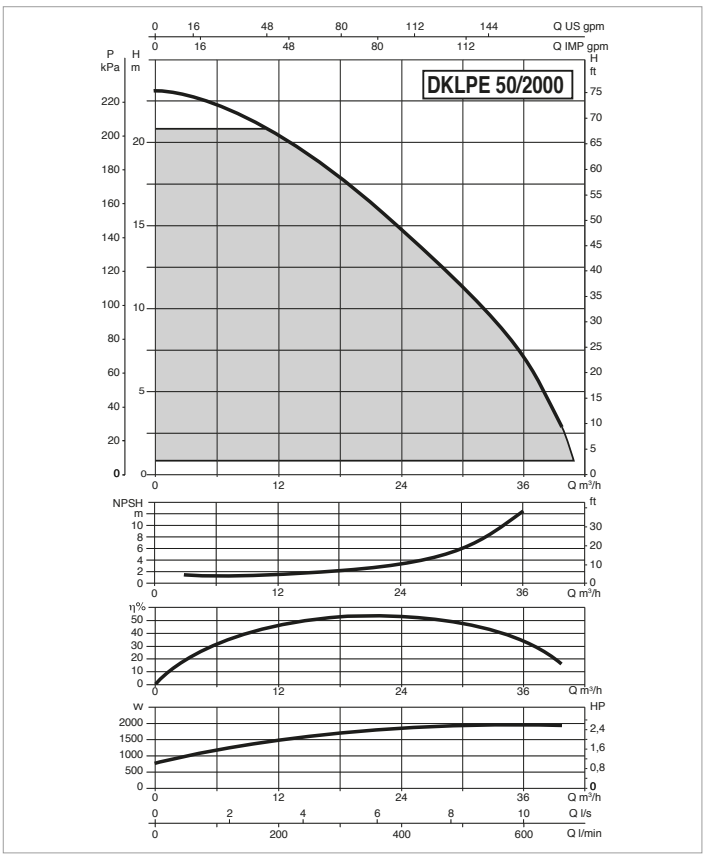

For the MEI index refer to the hydraulic data of the individual pump.

The performance curves are based on kinematic viscosity values = 1 mm^2/s and density equal to 1000 kg/m^3. Curve tolerance according to ISO 9906.

MODEL	ELECTRICAL DATA						
	POWER INPUT 50 Hz	POLES	n r.p.m.	P1 MAX kW	P2 NOMINAL		In A
					kW	HP	
DKLPE 50-2000 M MCE 15/C*	1x220-240 ~ V	2	2778	2,34	1,83	2,5	12,8

* ΔP-v proportional differential pressure adjustment mode also available.

MODEL	A	B	B1	B2	C	D	D1	D2	D3	D4	H	H1	I	L	L1	L2	M	DNA GAS	DNM GAS	PACKING DIMENSIONS			VOLUME (m^3)	WEIGHT Kg
																				L/A	L/B	H		
DKLPE 50-2000 M MCE 15/C	262	400	226	226	120	90	110	125	165	4 HOLES 18x25,5	622	73	240	280	130	150	4 HOLES M14	50	50	520	400	710	0,15	104

DKLME / DKLPE 65 - ELECTRONIC IN-LINE PUMPS FOR CIRCULATION SYSTEMS

Pumped liquid temperature range: from -15 °C to +120 °C - Maximum ambient temperature: +40°C

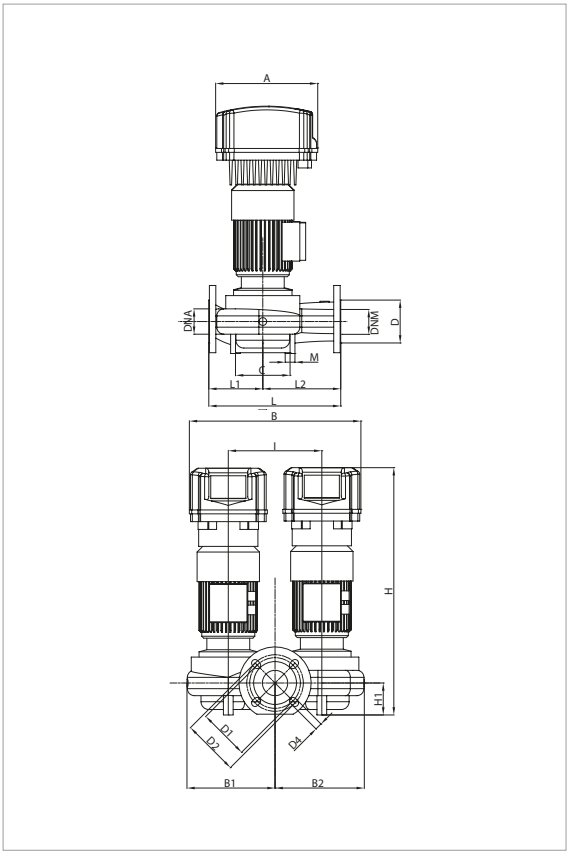

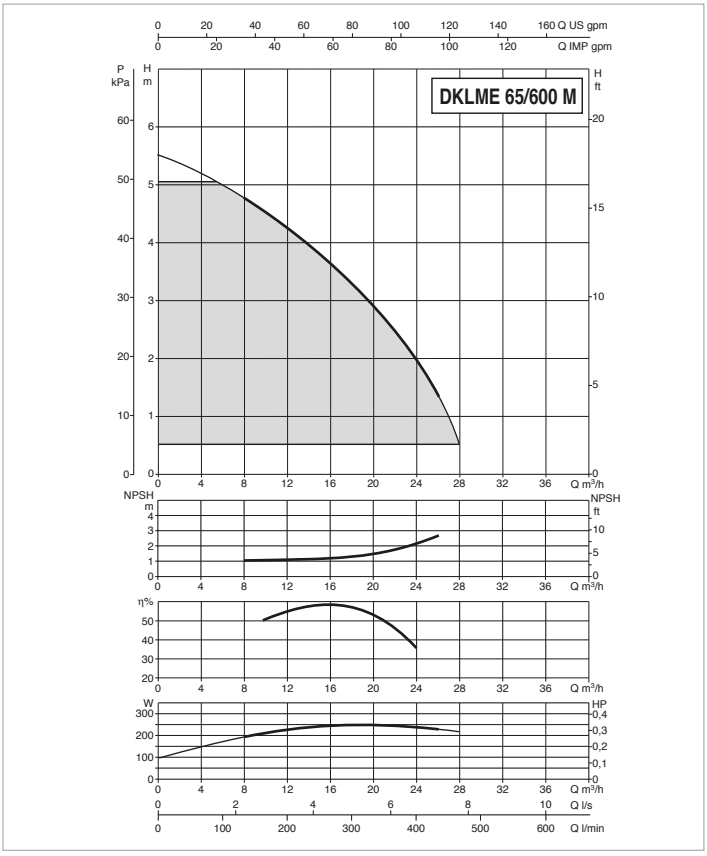

For the MEI index refer to the hydraulic data of the individual pump.

The performance curves are based on kinematic viscosity values = 1 mm^2/s and density equal to 1000 kg/m^3. Curve tolerance according to ISO 9906.

MODEL	ELECTRICAL DATA						
	POWER INPUT 50 Hz	POLES	n r.p.m.	P1 MAX kW	P2 NOMINAL		In A
					kW	HP	
DKLME 65-600 M MCE 11/C*	1x220-240 ~ V	4	1376	0,37	0,24	0,3	2,23

* ΔP-v proportional differential pressure adjustment mode also available.

MODEL	A	B	B1	B2	C	D	D1	D2	D3	D4	H	H1	I	L	L1	L2	M	DNA GAS	DNM GAS	PACKING DIMENSIONS			VOLUME (m^3)	WEIGHT Kg
																				L/A	L/B	H		
DKLME 65-600 M MCE 11/C	262	440	226	229	140	110	130	145	185	4 HOLES 18x23	641	82	240	340	140	200	2 HOLES M14	65	65	520	400	710	0,15	80

DKLME / DKLPE 65 - ELECTRONIC IN-LINE PUMPS FOR CIRCULATION SYSTEMS

Pumped liquid temperature range: from -15 °C to +120 °C - Maximum ambient temperature: +40°C

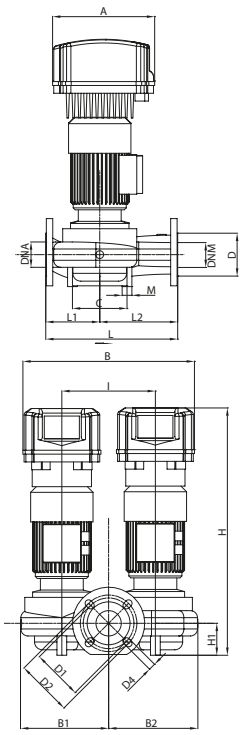

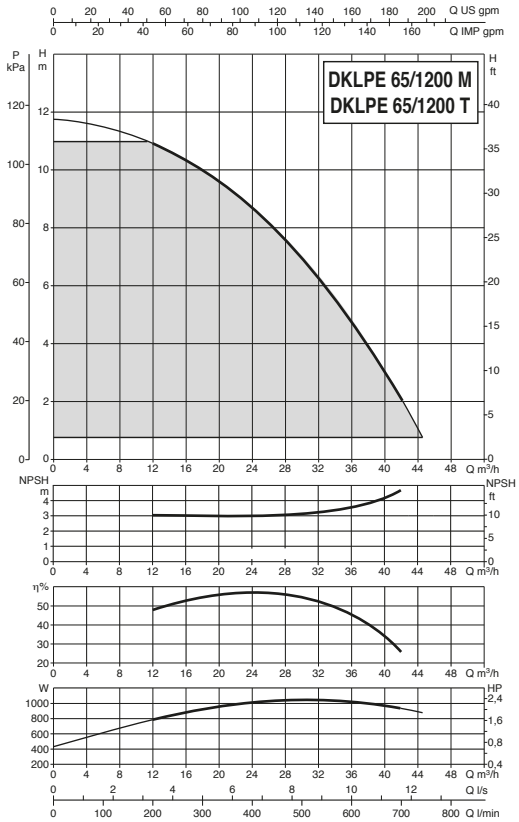

For the MEI index refer to the hydraulic data of the individual pump.

The performance curves are based on kinematic viscosity values = 1 mm^2/s and density equal to 1000 kg/m^3. Curve tolerance according to ISO 9906.

MODEL	ELECTRICAL DATA						
	POWER INPUT 50 Hz	POLES	n r.p.m.	P1 MAX kW	P2 NOMINAL		In A
					kW	HP	
DKLPE 65-1200 M MCE 11/C*	1x220-240 ~ V	2	2880	1,37	1,1	1,5	10,7
DKLPE 65-1200 T MCE 30/C	3x400 ~ V	2	2880	1,37	1,1	1,5	3,9

* ΔP-v proportional differential pressure adjustment mode also available.

MODEL	A	B	B1	B2	C	D	D1	D2	D3	D4	H	H1	I	L	L1	L2	M	DNA GAS	DNM GAS	PACKING DIMENSIONS			VOLUME (m^3)	WEIGHT Kg
																				L/A	L/B	H		
DKLPE 65-1200 M MCE 11/C	262	440	226	229	140	110	130	145	185	4 HOLES 18x23	641	82	240	340	140	200	2 HOLES M14	65	65	520	400	710	0,15	99
DKLPE 65-1200 T MCE 30/C	353	537	226	229	140	110	130	145	185		639	82	240	340	140	200		65	65	726	626	844	0,38	92

DKLME / DKLPE 65 - ELECTRONIC IN-LINE PUMPS FOR CIRCULATION SYSTEMS

Pumped liquid temperature range: from -15 °C to +120 °C - Maximum ambient temperature: +40°C

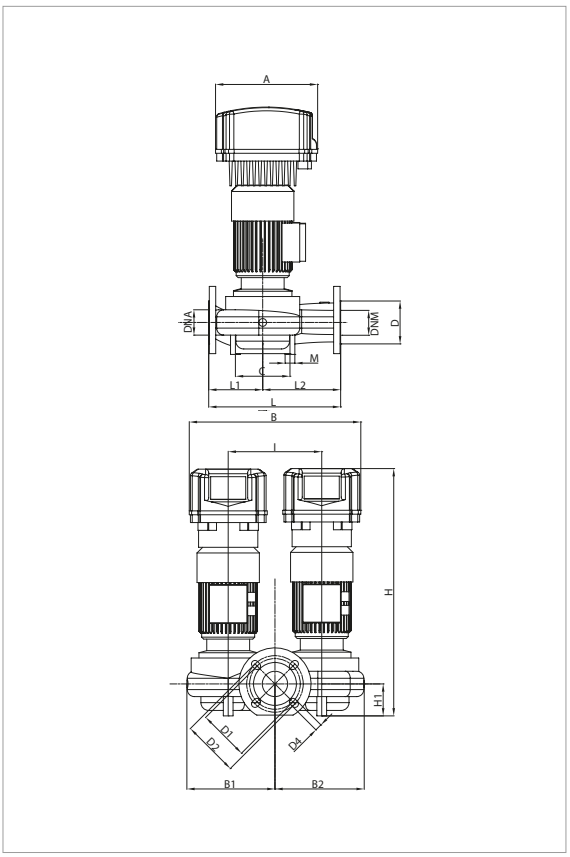

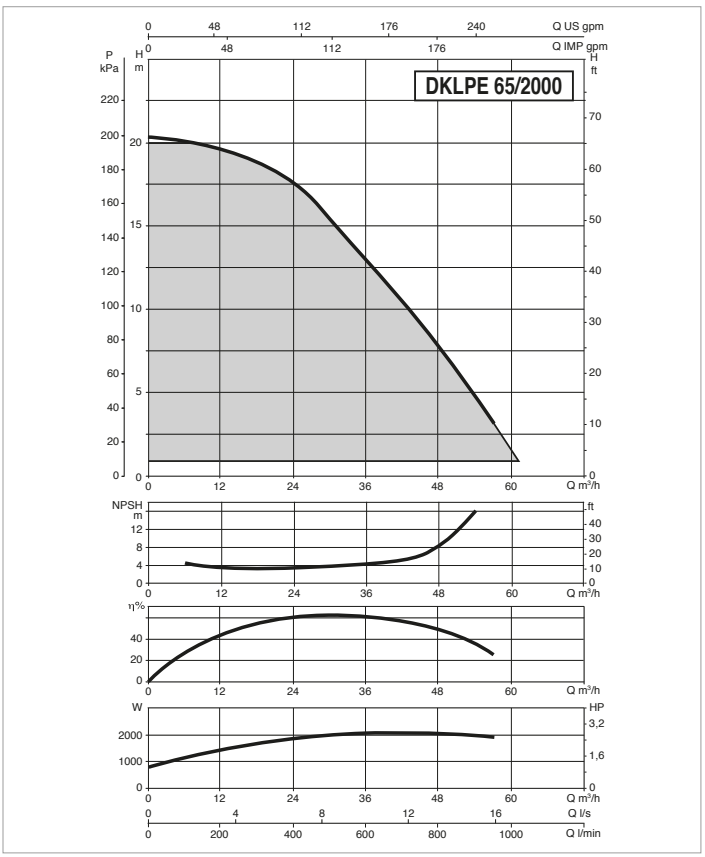

For the MEI index refer to the hydraulic data of the individual pump.

The performance curves are based on kinematic viscosity values = 1 mm^2/s and density equal to 1000 kg/m^3. Curve tolerance according to ISO 9906.

MODEL	ELECTRICAL DATA						
	POWER INPUT 50 Hz	POLES	n r.p.m.	P1 MAX kW	P2 NOMINAL		In A
					kW	HP	
DKLPE 65-2000 M MCE 22/C *	1x220-240 ~ V	2	2767	2,49	2	2,7	18,8
DKLPE 65-2000 T MCE 30/C	3x400 ~ V	2	2827	2,53	2	2,7	5,3

* ΔP-v proportional differential pressure adjustment mode also available.

MODEL	A	B	B1	B2	C	D	D1	D2	D3	D4	H	H1	I	L	L1	L2	M	DNA GAS	DNM GAS	PACKING DIMENSIONS			VOLUME (m^3)	WEIGHT Kg
																				L/A	L/B	H		
DKLPE 65-2000 M MCE 22/C	262	440	236	236	140	110	130	145	185	4 HOLES 18x25,5	719	82	240	341	139	202	4 HOLES M14	65	65	520	400	710	0,15	108
DKLPE 65-2000 T MCE 30/C	352	535	236	238	140	110	130	145	185		716	82	240	341	139	202		65	65	726	626	844	0,38	116

DKLME / DKLPE 80 - ELECTRONIC IN-LINE PUMPS FOR CIRCULATION SYSTEMS

Pumped liquid temperature range: from -15 °C to +120 °C - Maximum ambient temperature: +40°C

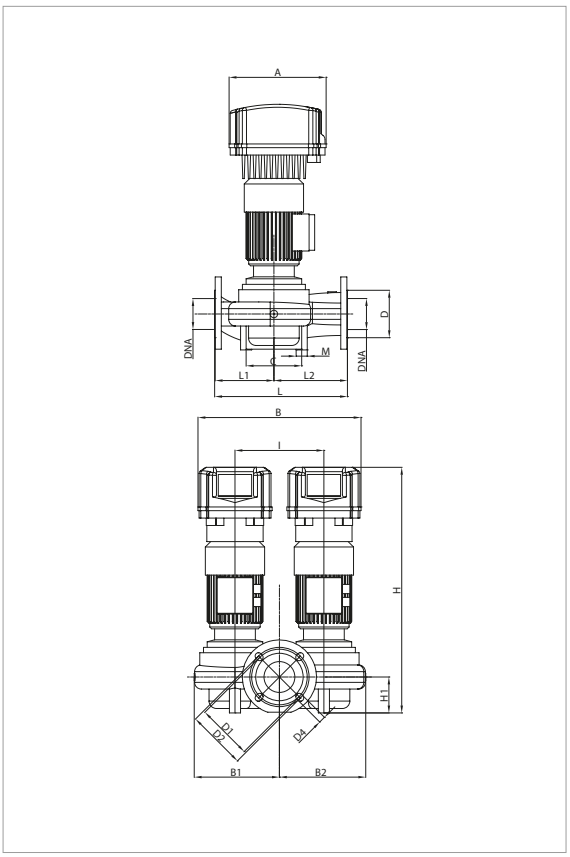

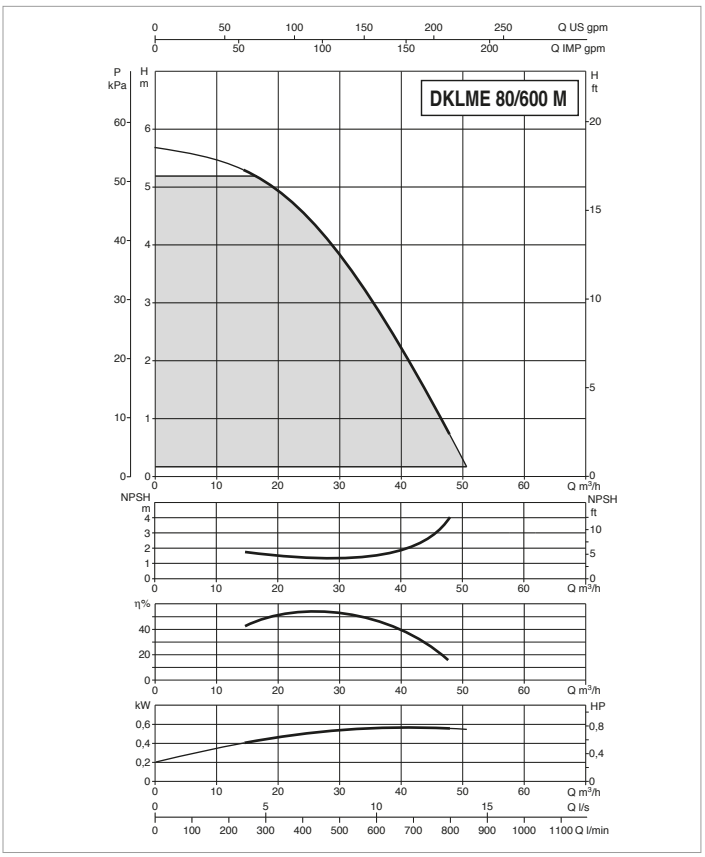

For the MEI index refer to the hydraulic data of the individual pump.

The performance curves are based on kinematic viscosity values = 1 mm^2/s and density equal to 1000 kg/m^3. Curve tolerance according to ISO 9906.

MODEL	ELECTRICAL DATA						
	POWER INPUT 50 Hz	POLES	n r.p.m.	P1 MAX kW	P2 NOMINAL		In A
					kW	HP	
DKLME 80-600 M MCE 11/C*	1x220-240 ~ V	4	1440	0,79	0,75	1	7

* ΔP-v proportional differential pressure adjustment mode also available.

MODEL	A	B	B1	B2	C	D	D1	D2	D3	D4	H	H1	I	L	L1	L2	M	DNA GAS	DNM GAS	PACKING DIMENSIONS			VOLUME (m^3)	WEIGHT Kg
																				L/A	L/B	H		
DKLME 80-600 M MCE 11/C	262	440	230	233	150	128	150	160	200	4 HOLES 18x23	671	97	240	360	160	200	2 HOLES M14	80	80	520	400	710	0,15	96

DKLME / DKLPE 80 - ELECTRONIC IN-LINE PUMPS FOR CIRCULATION SYSTEMS

Pumped liquid temperature range: from -15 °C to +120 °C - Maximum ambient temperature: +40°C

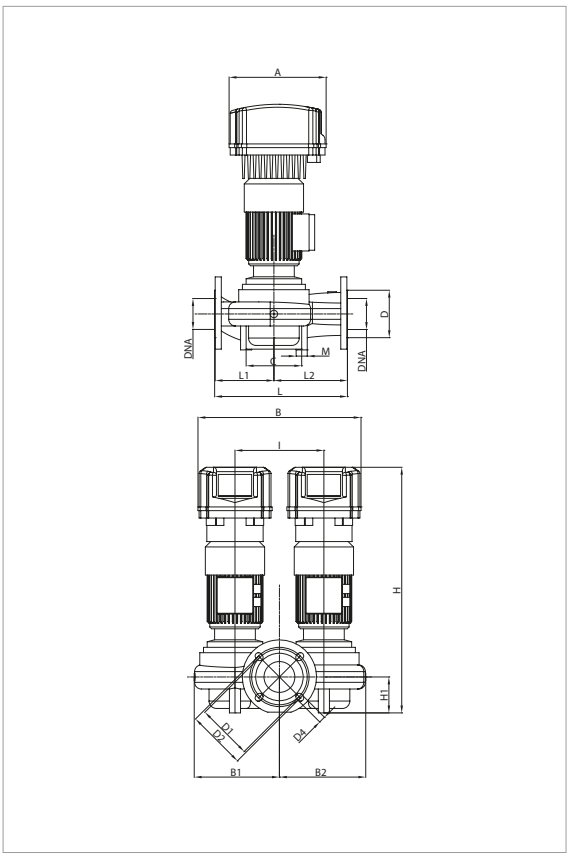

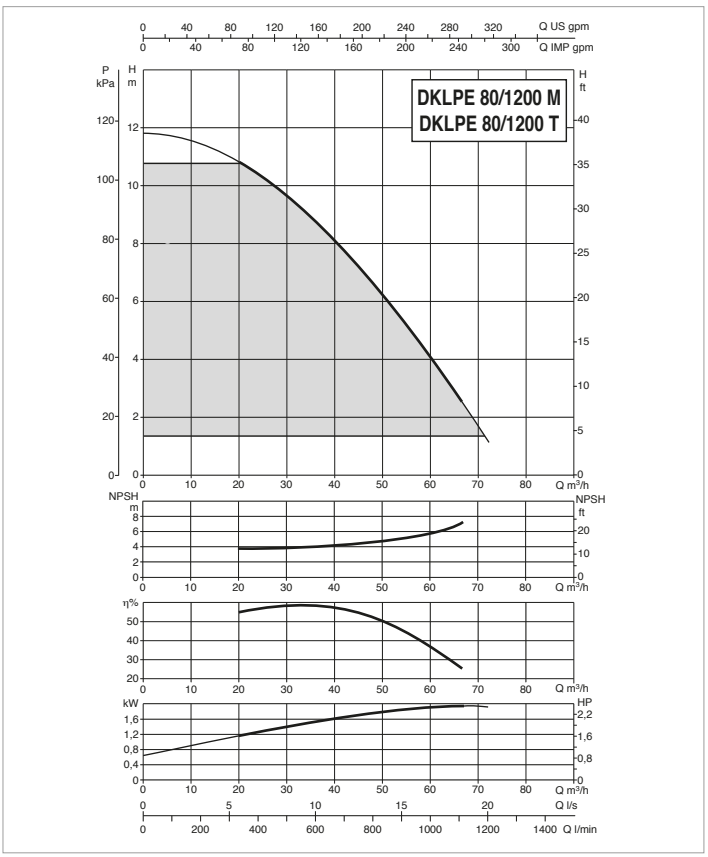

For the MEI index refer to the hydraulic data of the individual pump.

The performance curves are based on kinematic viscosity values = 1 mm^2/s and density equal to 1000 kg/m^3. Curve tolerance according to ISO 9906.

MODEL	ELECTRICAL DATA						
	POWER INPUT 50 Hz	POLES	n r.p.m.	P1 MAX kW	P2 NOMINAL		In A
					kW	HP	
DKLPE 80-1200 M MCE 30/C*	1x220-240 ~ V	2	2840	2,21	1,84	2,5	16
DKLPE 80-1200 T MCE 30/C*	3x400 ~ V	2	2840	2,21	1,84	2,5	4,8

* ΔP-v proportional differential pressure adjustment mode also available.

MODEL	A	B	B1	B2	C	D	D1	D2	D3	D4	H	H1	I	L	L1	L2	M	DNA GAS	DNM GAS	PACKING DIMENSIONS			VOLUME (m^3)	WEIGHT Kg
																				L/A	L/B	H		
DKLPE 80-1200 M MCE 30/C	262	440	230	233	150	128	150	160	200	4 HOLES 18x23	746	97	240	360	160	200	2 HOLES M14	80	80	520	400	710	0,15	98
DKLPE 80-1200 T MCE 30/C	353	537	230	233	150	128	150	160	200		746	97	240	360	160	200		80	80	726	626	844	0,38	108

DKLME / DKLPE 80 - ELECTRONIC IN-LINE PUMPS FOR CIRCULATION SYSTEMS

Pumped liquid temperature range: from -15 °C to +120 °C - Maximum ambient temperature: +40°C

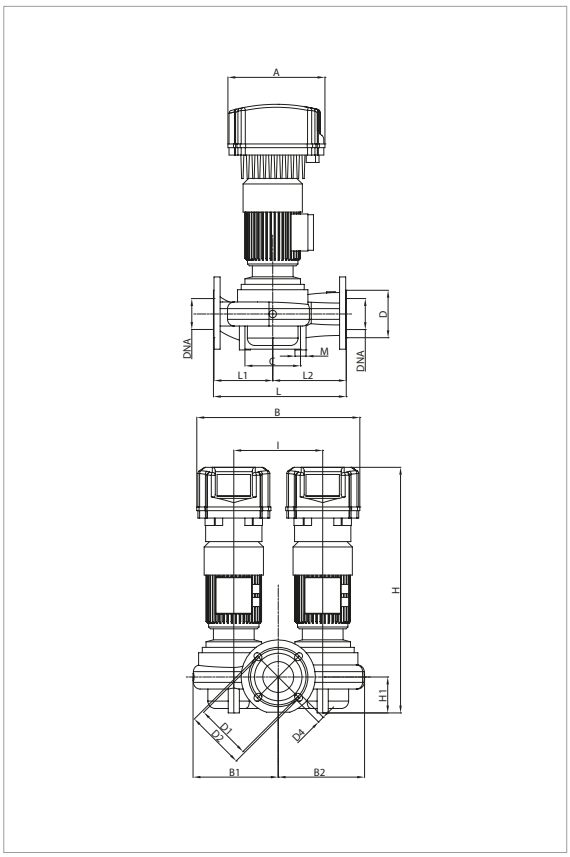

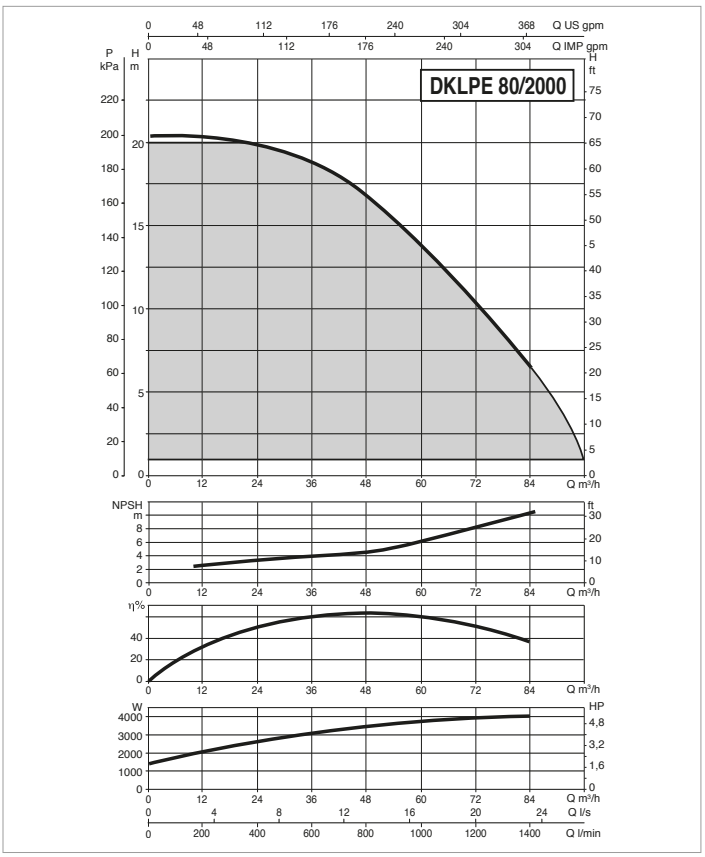

For the MEI index refer to the hydraulic data of the individual pump.

The performance curves are based on kinematic viscosity values = 1 mm^2/s and density equal to 1000 kg/m^3. Curve tolerance according to ISO 9906.

MODEL	ELECTRICAL DATA						
	POWER INPUT 50 Hz	POLES	n r.p.m.	P1 MAX kW	P2 NOMINAL		In A
					kW	HP	
DKLPE 80-2000 T MCE 55/C	3x400 ~ V	2	2864	4,84	3,67	5	9,07

* ΔP-v proportional differential pressure adjustment mode also available.

MODEL	A	B	B1	B2	C	D	D1	D2	D3	D4	H	H1	I	L	L1	L2	M	DNA GAS	DNM GAS	PACKING DIMENSIONS			VOLUME (m^3)	WEIGHT Kg
																				L/A	L/B	H		
DKLPE 80-2000 T MCE 55/C	352	567	238	241	150	128	150	160	200	4 HOLES 18x23	713	97	240	360	160	200	4 HOLES M14	80	80	726	626	844	0,38	125

NOTES

NOTES

NOTES

DAB
WATER•TECHNOLOGY

DNA PUMPS SELECTOR

On-line selection tool