LEO 利欧	**Product Information** **LVR2-21**	Manufacturer	LEO
		Address	China,Zhejiang,Wenling
		Contact	0576-89988888
		Date	2023/10/16
Project Name		Client Name	Spaceport
		Client Addr.	Куйбышева 95
Item NO		Contacts	
		Contact	

Part NO.	50012233

Product Picture	Note
	LVR series verrtical multistage centrifugal pump is applicable to transfer liquids without solid particles<0.2mm and fiberslow viscositynon-inflammable non-explosive and not easy vaporization. Widely used in high-rise building water supply and drainageWater filtration and transportation, pipeline pressurization. High pressure flushing and cleaning system. Boiler feed water, cooling water circulation, water treatment system and other equipment supporting system. Ultrafiltration system, reverse osmosis system, distillation system, separator, swimming pool and other water treatment systems. Irrigation and drip irrigation systems in agriculture. food and beverage and fire fighting systems.

Nameplate parameters

flow	2 m³/h
head	157 m
speed	2900 rpm
number of stages	21

Technical

Flow range (m³/h)	1-3.5m3/h
Curve tolerance	ISO 9906 Annex A
Head range (m)	

Material

Impeller	AISI 304
Diffuser	AISI 304
Pump shaft	AISI 304
Pump flange	HT200
Motor base	HT200
Coupling	ferrous powder metallurgy
Pump barrel	AISI 304

Working conditions

Medium temperature (°C)	-20°C ~ +120°C
Max. ambient temperature (°C)	+40°C
Pumped medium	Clean water
Working pressure	16bar
Maximum inlet pressure	15bar

Installation

Connection method	Oval flange
Inlet / outlet dia.	G1 1/4

Motor

Motor phase	Three phase
Protection class	IP55
Motor poles	2
Insulation class	F
Motor power (KW)	2.2kW
Motor model	YX3-90L-2
Frequency	50Hz
Rated voltage (V)	380V

Rated current (A)	4.73A
Efficiency class	IE2\\IE3
Power factor	0.85
Efficiency (%)	

Weight/Packaging

Net weight (kg)	41.8
Gross weight (kg)	50.4
Package size	980*280*305mm

LEO 利欧	Performance Curve LVR2-21	Manufacturer	LEO
		Address	China,Zhejiang,Wenling
		Contact	0576-89988888
		Date	2023/10/16
Project Name		Client Name	Spaceport
		Client Addr.	Куйбышева 95
Item NO		Contacts	
		Contact	

The hydraulic performance curve have been tested withWaterat°C,density 1000kg/m³,and at 1bar atmospherical pressure. GB32162016 Grande 3B

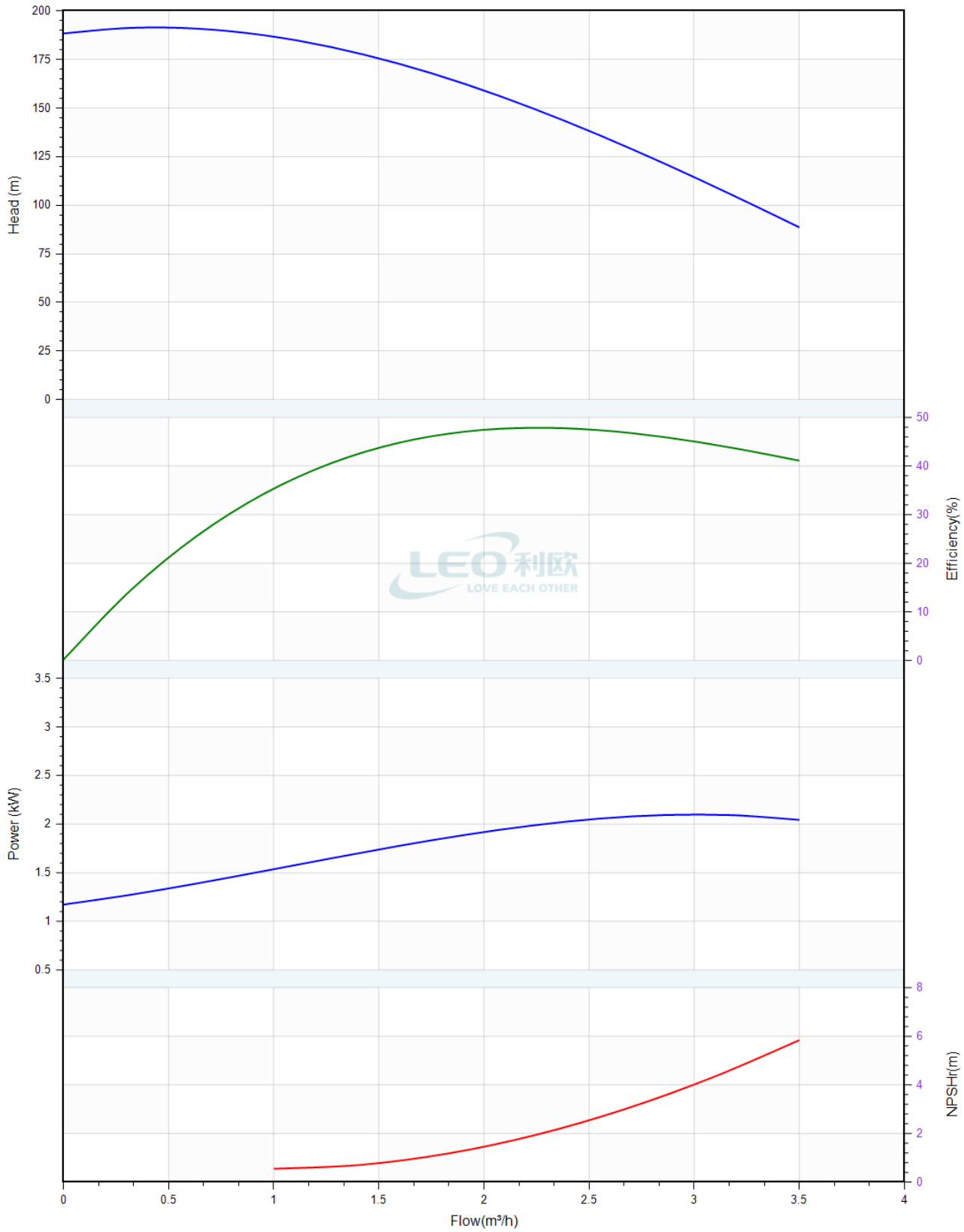

LEO 利欧	**Pump Technical Parameters** **LVR2-21**	Manufacturer	LEO
		Address	China,Zhejiang,Wenling
		Contact	0576-89988888
		Date	2023/10/16
Project Name		Client Name	Spaceport
		Client Addr.	Куйбышева 95
Item NO		Contacts	
		Contact	

Rated parameters	
Pump model	LVR2-21
Part NO.	50012233
Rated flow	2 m³/h
Rated head	157 m
Rated efficiency (%)	47.5
Power (kW)	1.8
Speed (rpm)	2900

Medium	
Pumped medium	Water
Working temperature (°C)	20
Medium density (kg/m³)	1000
Viscosity (mm²/s)	1

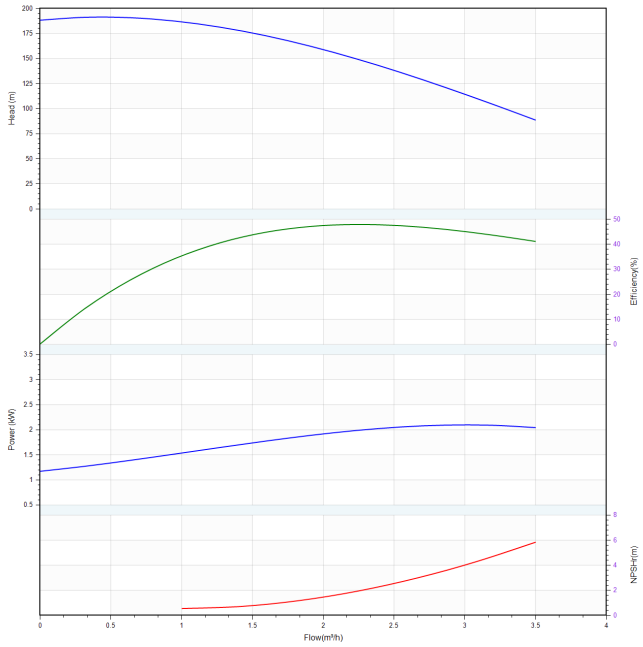

LEO 利欧
LOVE EACH OTHER

LEO 利欧	Dimension Drawing LVR2-21	Manufacturer	LEO
		Address	China,Zhejiang,Wenling
		Contact	0576-89988888
		Date	2023/10/16
Project Name		Client Name	Spaceport
		Client Addr.	Куйбышева 95
Item NO		Contacts	
		Contact	

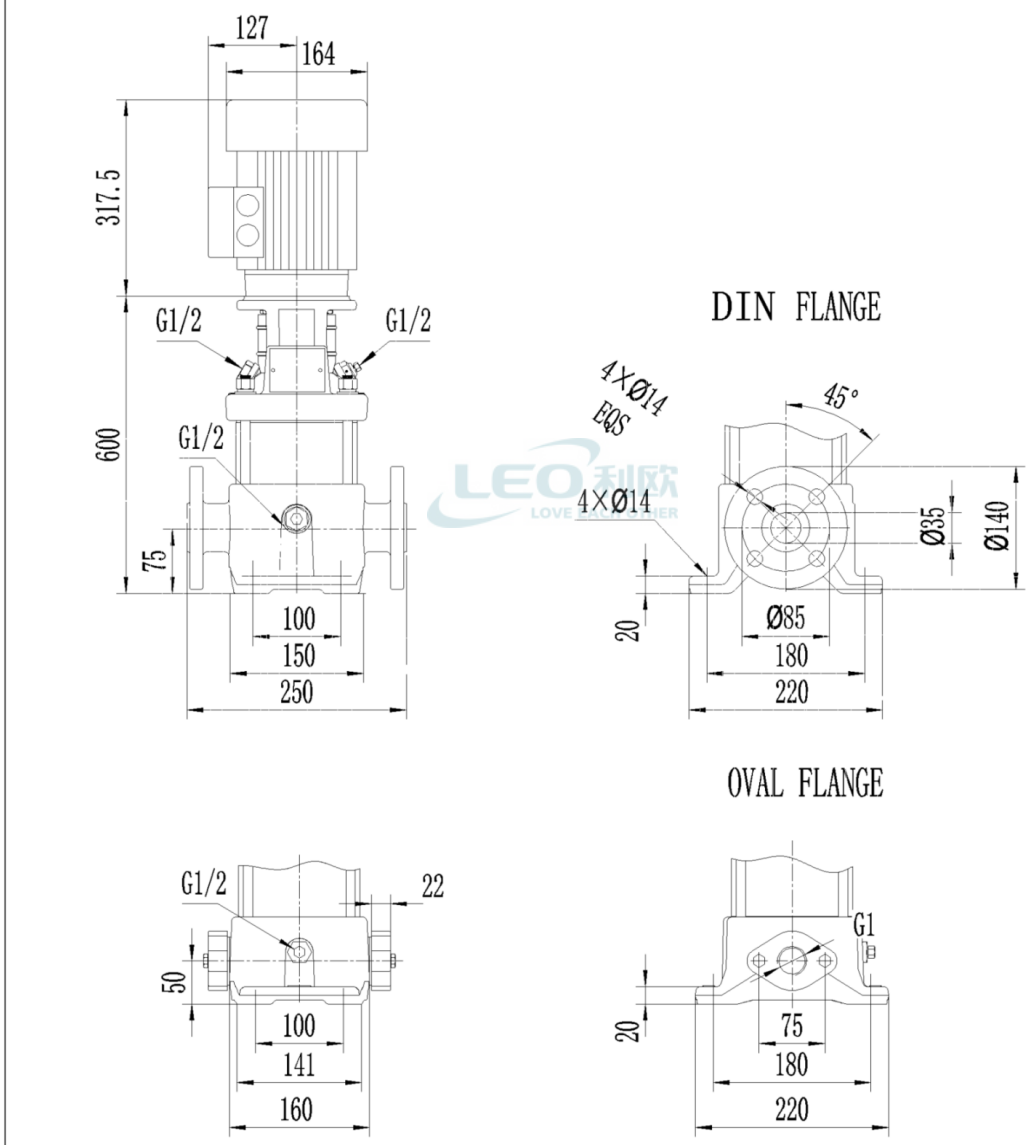

LEO 利欧	Structure picture LVR2-21	Manufacturer	LEO
		Address	China,Zhejiang,Wenling
		Contact	0576-89988888
		Date	2023/10/16
Project Name		Client Name	Spaceport
		Client Addr.	Куйбышева 95
Item NO		Contacts	
		Contact	

42、Wave spring
41、Motor base
40、Filling plug
39、Hexagon screw
38、Spring washer
37、Cartridge seal (Type 12)
36、Straight pin ∅5 X 26
35、Motor (B14)
34、Half-coupling
33、Socket head cap crew
32、Cross recessed pan head screw M4X5
31、Guarding board
30、Vent plug assembly
29、Hexagon nut M12
28、Gasket 12
27、Name plate
26、Rivet 2X4
25、Staybolt M12
24、Final diffuser
23、Shaft
22、Orientation cover
21、Sleeve 17.5
20、Medium diffuser
19、Sleeve 4.5
18、Bearing ring
17、Diffuser with bearing
16、Impeller
15、Splined bearing
14、Locknut M8
13、Wearing ring cover
12、Wearing ring
11、Primary diffuser
10、Pump
9、O-ring ∅135X3.55
8、Gasket($1\frac{1}{4}$")
7、Oval flange (1")
6、Gasket 8
5、Spring washer 8
4、Hexagon screw M8X35
3、Base
2、O-ring ∅17 X 2.65
1、Drainage plug assembly

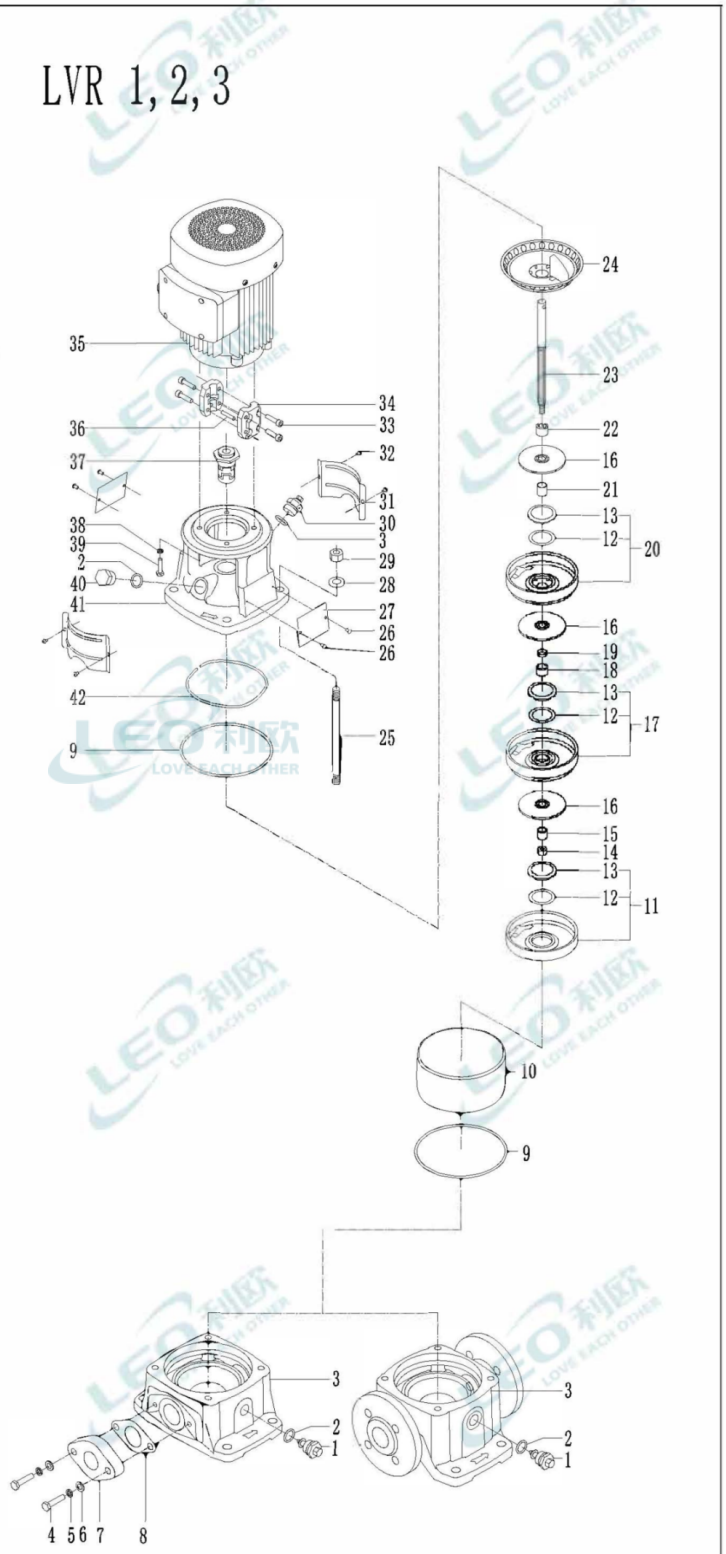
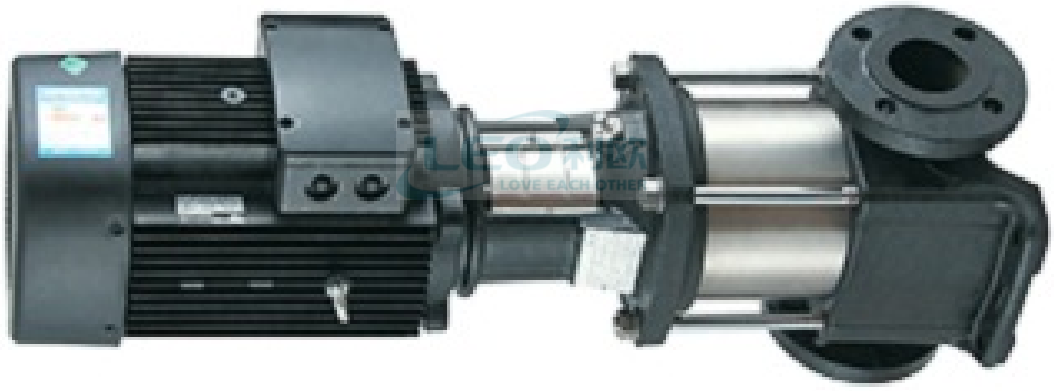
LEO 利欧	Physical picture LVR2-21	Manufacturer	LEO
		Address	China,Zhejiang,Wenling
		Contact	0576-89988888
		Date	2023/10/16
Project Name		Client Name	Spaceport
		Client Addr.	Куйбышева 95
Item NO		Contacts	
		Contact