LEO 利欧	**Product Information** **LVR20-8**	Manufacturer	LEO
		Address	China,Zhejiang,Wenling
		Contact	0576-89988888
		Date	2023/10/17
Project Name		Client Name	Spaceport
		Client Addr.	Куйбышева 95
Item NO		Contacts	
		Contact	

Part NO.	50005539

Product Picture	Note
	LVR series verrtical multistage centrifugal pump is applicable to transfer liquids without solid particles<0.2mm and fiberslow viscositynon-inflammable non-explosive and not easy vaporization. Widely used in high-rise building water supply and drainageWater filtration and transportation, pipeline pressurization. High pressure flushing and cleaning system. Boiler feed water, cooling water circulation, water treatment system and other equipment supporting system. Ultrafiltration system, reverse osmosis system, distillation system, separator, swimming pool and other water treatment systems. Irrigation and drip irrigation systems in agriculture. food and beverage and fire fighting systems.

Nameplate parameters

flow	20 m³/h
head	96 m
speed	2900 rpm
number of stages	8

Technical

Flow range (m³/h)	10.5-29m3/h
Curve tolerance	ISO 9906 Annex A
Head range (m)	

Material

Impeller	AISI 304
Diffuser	AISI 304
Pump shaft	AISI 304
Pump flange	0
Motor base	0
Coupling	ferrous powder metallurgy
Pump barrel	AISI 304

Working conditions

Medium temperature (°C)	-20°C ~ +120°C
Max. ambient temperature (°C)	+40°C
Pumped medium	Clean water
Working pressure	25bar
Maximum inlet pressure	10bar

Installation

Connection method	DIN flange
Inlet / outlet dia.	DN50

Motor

Motor phase	Three phase
Protection class	IP55
Motor poles	2
Insulation class	F
Motor power (KW)	11kW
Motor model	YX3-160M1-2
Frequency	50Hz
Rated voltage (V)	380V

Rated current (A)	21A
Efficiency class	IE2\\IE3
Power factor	0.89
Efficiency (%)	

Weight/Packaging

Net weight (kg)	83.6
Gross weight (kg)	94.55
Package size	1370*395*580mm

LEO 利欧	Performance Curve LVR20-8	Manufacturer	LEO
		Address	China,Zhejiang,Wenling
		Contact	0576-89988888
		Date	2023/10/17
Project Name		Client Name	Spaceport
		Client Addr.	Куйбышева 95
Item NO		Contacts	
		Contact	

The hydraulic performance curve have been tested withWaterat°C,density 1000kg/m³,and at 1bar atmospherical pressure. GB32162016 Grande 3B

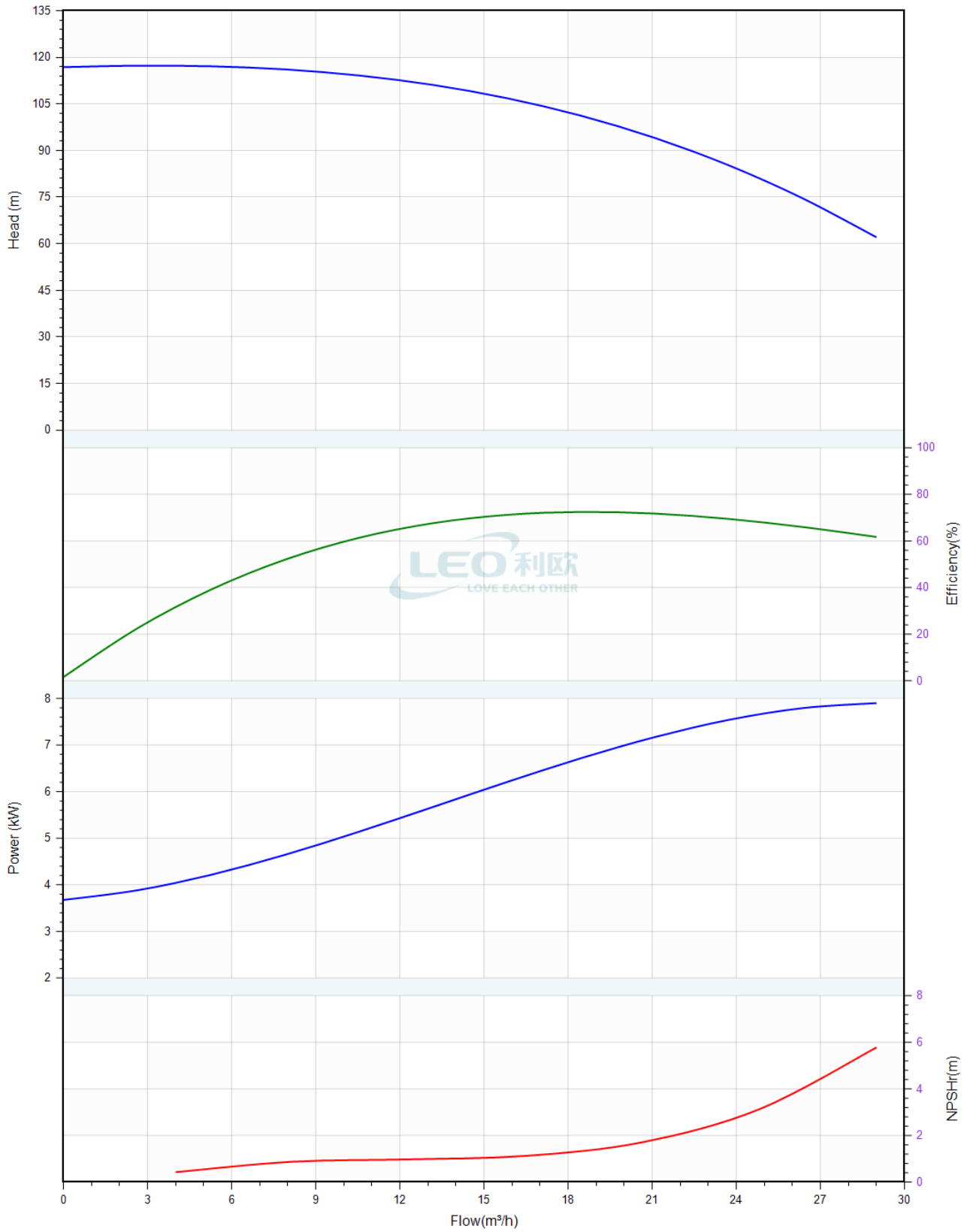

LEO 利欧	Pump Technical Parameters LVR20-8	Manufacturer	LEO
		Address	China,Zhejiang,Wenling
		Contact	0576-89988888
		Date	2023/10/17
Project Name		Client Name	Spaceport
		Client Addr.	Куйбышева 95
Item NO		Contacts	
		Contact	

Rated parameters	
Pump model	LVR20-8
Part NO.	50005539
Rated flow	20 m³/h
Rated head	96 m
Rated efficiency (%)	72
Power (kW)	7.27
Speed (rpm)	2900

Medium	
Pumped medium	Water
Working temperature (°C)	20
Medium density (kg/m³)	1000
Viscosity (mm²/s)	1

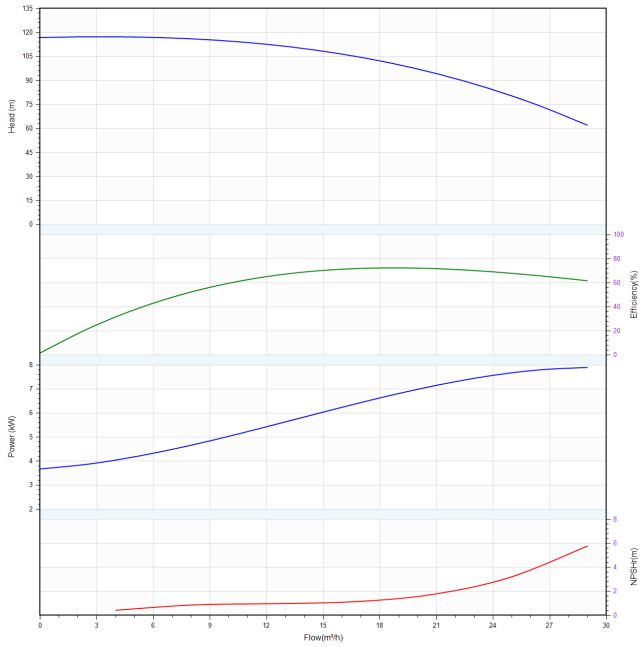

LEO 利欧
LOVE EACH OTHER

LEO 利欧	Dimension Drawing LVR20-8	Manufacturer	LEO
		Address	China,Zhejiang,Wenling
		Contact	0576-89988888
		Date	2023/10/17
Project Name		Client Name	Spaceport
		Client Addr.	Куйбышева 95
Item NO		Contacts	
		Contact	

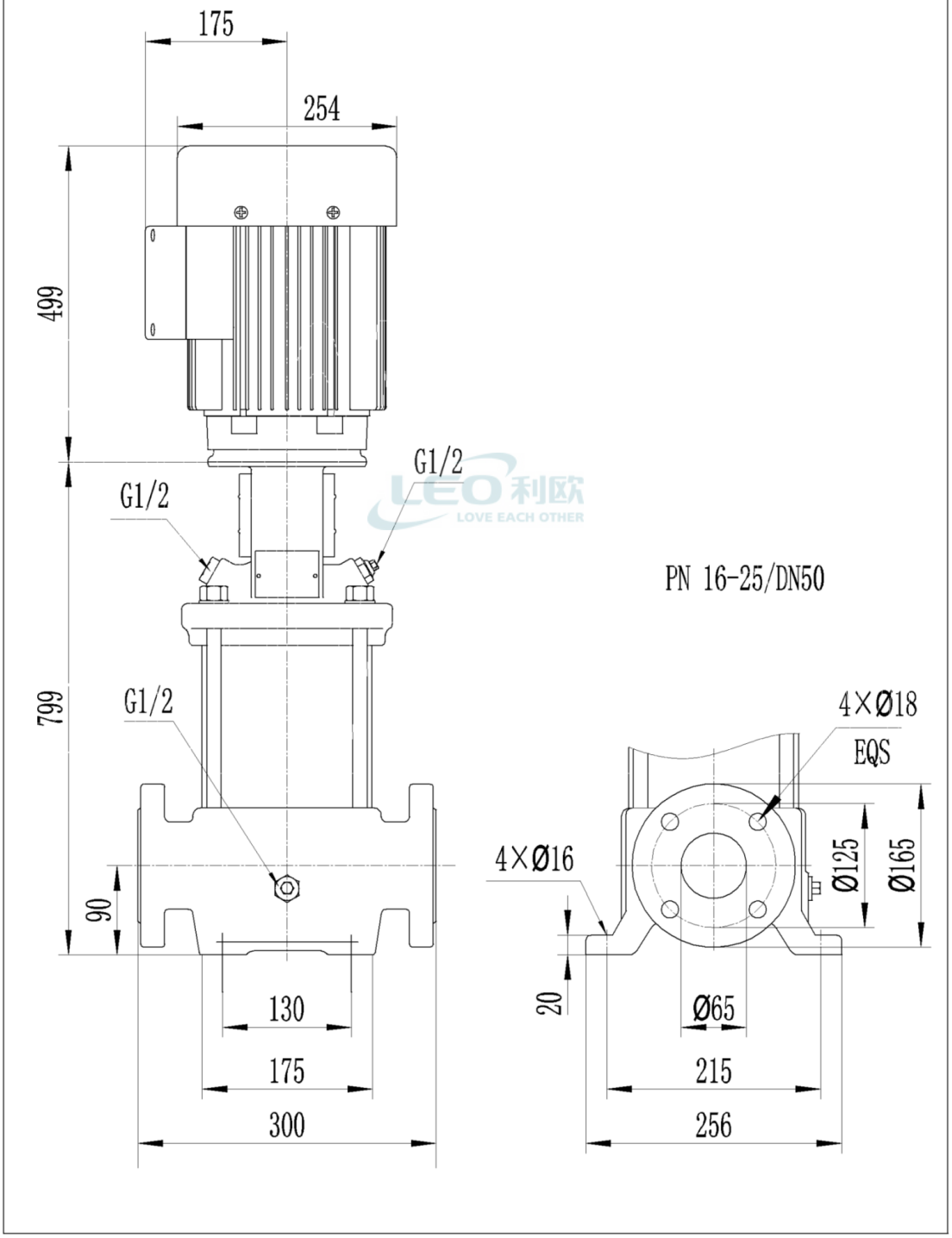

LEO 利欧	Structure picture LVR20-8	Manufacturer	LEO
		Address	China,Zhejiang,Wenling
		Contact	0576-89988888
		Date	2023/10/17
Project Name		Client Name	Spaceport
		Client Addr.	Куйбышева 95
Item NO		Contacts	
		Contact	

LVR15, 20

48、Adjustable washer
47、Pump cover
46、Motor base
45、Filling plug
43、Spring washer
42、Cartridge seal (Type 16)
41、Straight pin Ø5×26
40、Hexagon nut M16
39、Motor
38、Half-coupling
37、Socket head cap crew
36、Cross recessed pan head screwM4×5
35、Guarding plate
34、Vent plug assembly
33、Hexagon nut M16
32、Gasket 16
31、Nameplate
30、Rivet 2×4
29、Staybolt M16
28、Shaft
27、Ring
26、Orientation cover
25、Sleeve 25.5
24、Final diffuser
23、Sleeve 43.5
22、Medium diffuser
21、Sleeve 17
20、Diffuser with bearing
19、Splined bearing
18、Sleeve 12.5
17、Impeller
16、Wearing ring
15、Splined bearing
14、Locknut M8
13、Wearing ring cover
12、Wearing ring
11、Primary diffuser
10、Bolt
9、Filling cover
8、Gasket 8
7、Spring washer 8
6、Hexagon screw M8×25
5、Pump barrel
4、O-ring Ø170×3.55
3、Base
2、O-ring Ø17×2.65
1、Drainage plug assembly

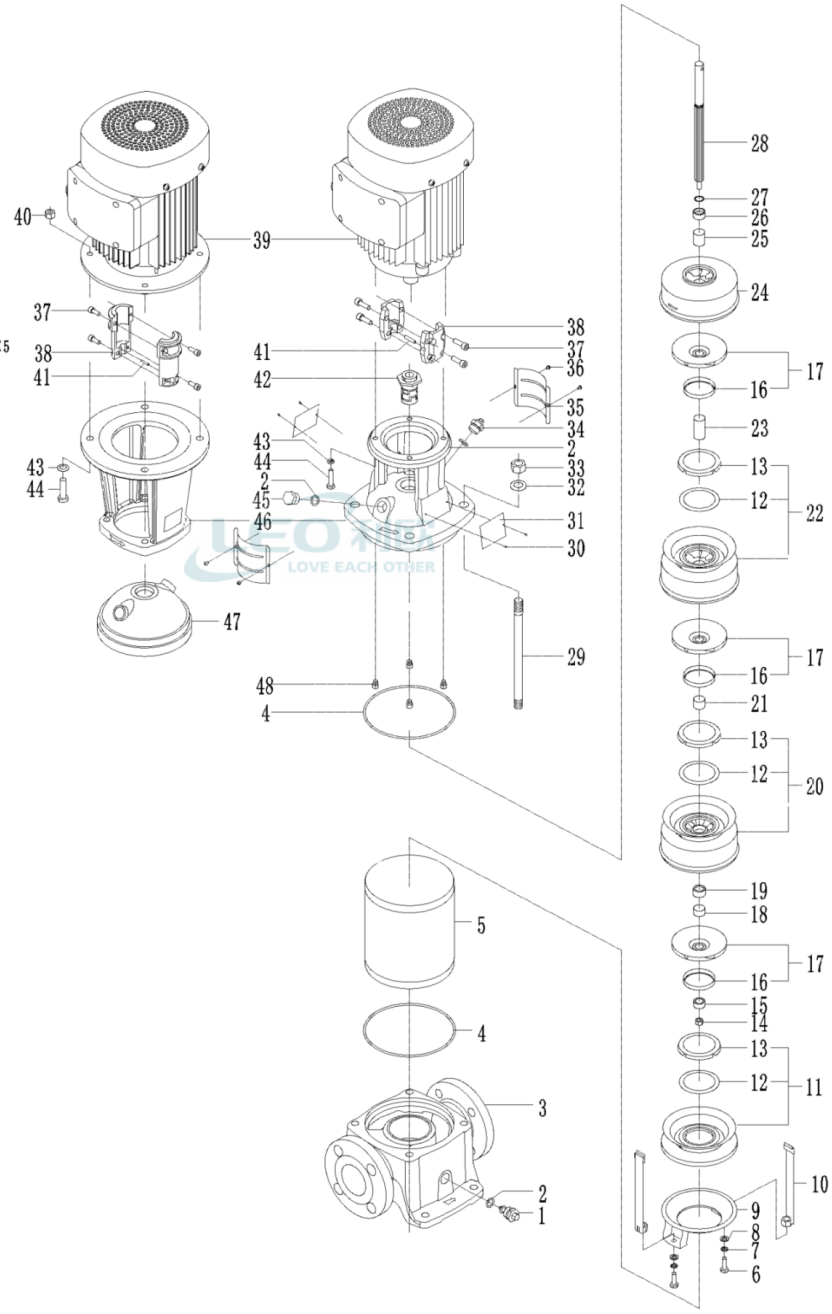
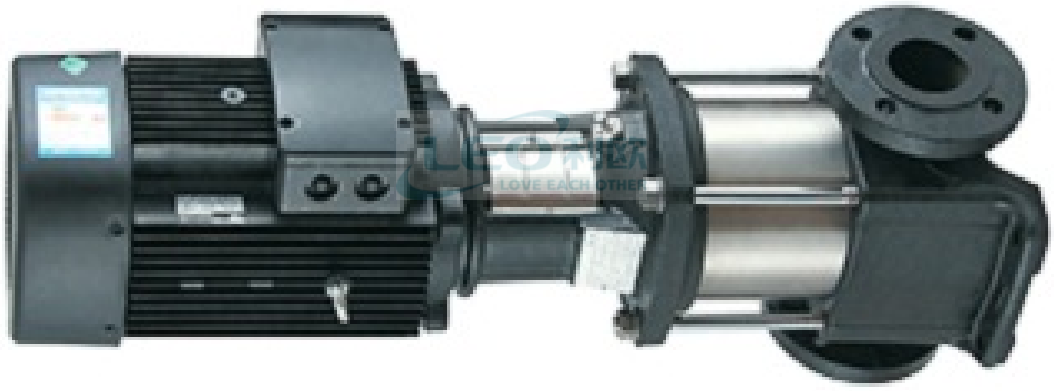
LEO 利欧	Physical picture LVR20-8	Manufacturer	LEO
		Address	China,Zhejiang,Wenling
		Contact	0576-89988888
		Date	2023/10/17
Project Name		Client Name	Spaceport
		Client Addr.	Куйбышева 95
Item NO		Contacts	
		Contact