LEO 利欧	Product Information LVR32-6-2	Manufacturer	LEO
		Address	China,Zhejiang,Wenling
		Contact	0576-89988888
		Date	2023/10/19
Project Name		Client Name	Spaceport
		Client Addr.	Куйбышева 95 Б
Item NO		Contacts	
		Contact	

Part NO.	50010808

Product Picture	Note
	LVR series verrtical multistage centrifugal pump is applicable to transfer liquids without solid particles<0.2mm and fiberslow viscositynon-inflammable non-explosive and not easy vaporization. Widely used in high-rise building water supply and drainageWater filtration and transportation, pipeline pressurization. High pressure flushing and cleaning system. Boiler feed water, cooling water circulation, water treatment system and other equipment supporting system. Ultrafiltration system, reverse osmosis system, distillation system, separator, swimming pool and other water treatment systems. Irrigation and drip irrigation systems in agriculture. food and beverage and fire fighting systems.

Nameplate parameters

flow	32 m³/h
head	79.5 m
speed	2900 rpm
number of stages	6

Technical

Flow range (m³/h)	15-40m3/h
Curve tolerance	ISO 9906 Annex A
Head range (m)	

Material

Impeller	AISI 304
Diffuser	AISI 304
Pump shaft	AISI 304
Pump flange	ZG35
Motor base	ZG35
Coupling	QT400
Pump barrel	AISI 304

Working conditions

Medium temperature (°C)	-20°C ~ +120°C
Max. ambient temperature (°C)	+40°C
Pumped medium	Clean water
Working pressure	16bar
Maximum inlet pressure	10bar

Installation

Connection method	DIN flange
Inlet / outlet dia.	DN65

Motor

Motor phase	Three phase
Protection class	IP55
Motor poles	2
Insulation class	F
Motor power (KW)	11kW
Motor model	YX3-160M1-2
Frequency	50Hz
Rated voltage (V)	380V

	Product Information LVR32-6-2	Manufacturer	LEO
		Address	China,Zhejiang,Wenling
		Contact	0576-89988888
		Date	2023/10/19
Project Name		Client Name	Spaceport
		Client Addr.	Куйбышева 95 Б
Item NO		Contacts	
		Contact	

Rated current (A)	21A
Efficiency class	IE2\\IE3
Power factor	0.89
Efficiency (%)	

Weight/Packaging

Net weight (kg)	152.07
Gross weight (kg)	171.17
Package size	1535*395*584mm

LEO 利欧	Performance Curve LVR32-6-2	Manufacturer	LEO
		Address	China,Zhejiang,Wenling
		Contact	0576-89988888
		Date	2023/10/19
Project Name		Client Name	Spaceport
		Client Addr.	Куйбышева 95 Б
Item NO		Contacts	
		Contact	

The hydraulic performance curve have been tested withWaterat°C,density 1000kg/m³,and at 1bar atmospherical pressure. GB32162016 Grande 3B

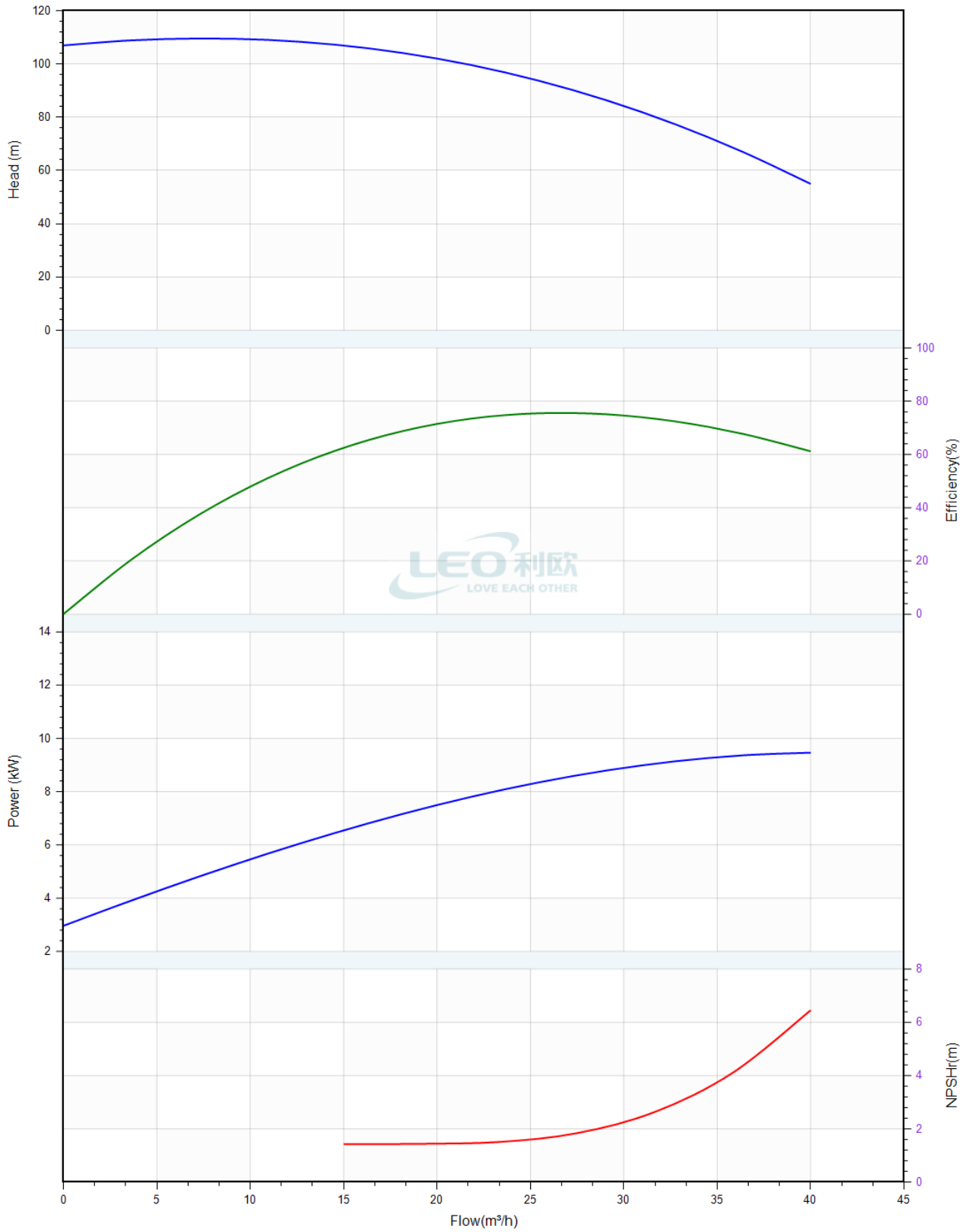

LEO 利欧	Pump Technical Parameters LVR32-6-2	Manufacturer	LEO
		Address	China,Zhejiang,Wenling
		Contact	0576-89988888
		Date	2023/10/19
Project Name		Client Name	Spaceport
		Client Addr.	Куйбышева 95 Б
Item NO		Contacts	
		Contact	

Rated parameters	
Pump model	LVR32-6-2
Part NO.	50010808
Rated flow	32 m³/h
Rated head	79.5 m
Rated efficiency (%)	74.5
Power (kW)	9.31
Speed (rpm)	2900

Medium	
Pumped medium	Water
Working temperature (°C)	20
Medium density (kg/m³)	1000
Viscosity (mm²/s)	1

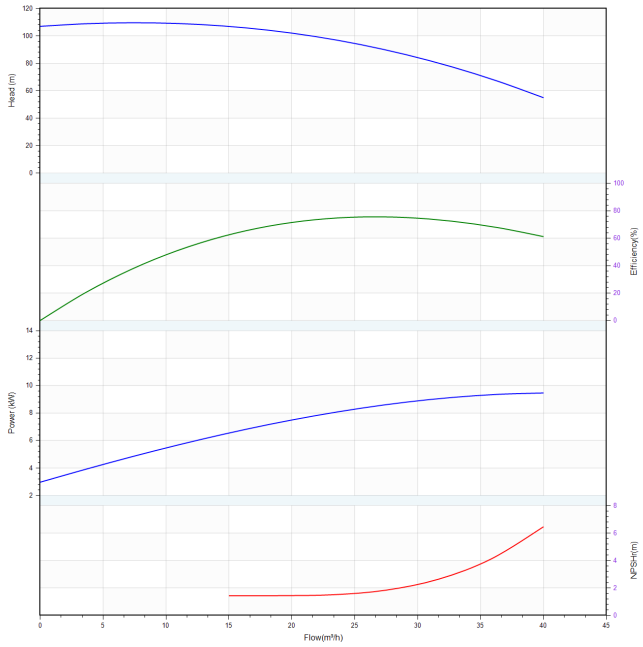

LEO 利欧
LOVE EACH OTHER

LEO 利欧	Dimension Drawing LVR32-6-2	Manufacturer	LEO
		Address	China,Zhejiang,Wenling
		Contact	0576-89988888
		Date	2023/10/19
Project Name		Client Name	Spaceport
		Client Addr.	Куйбышева 95 Б
Item NO		Contacts	
		Contact	

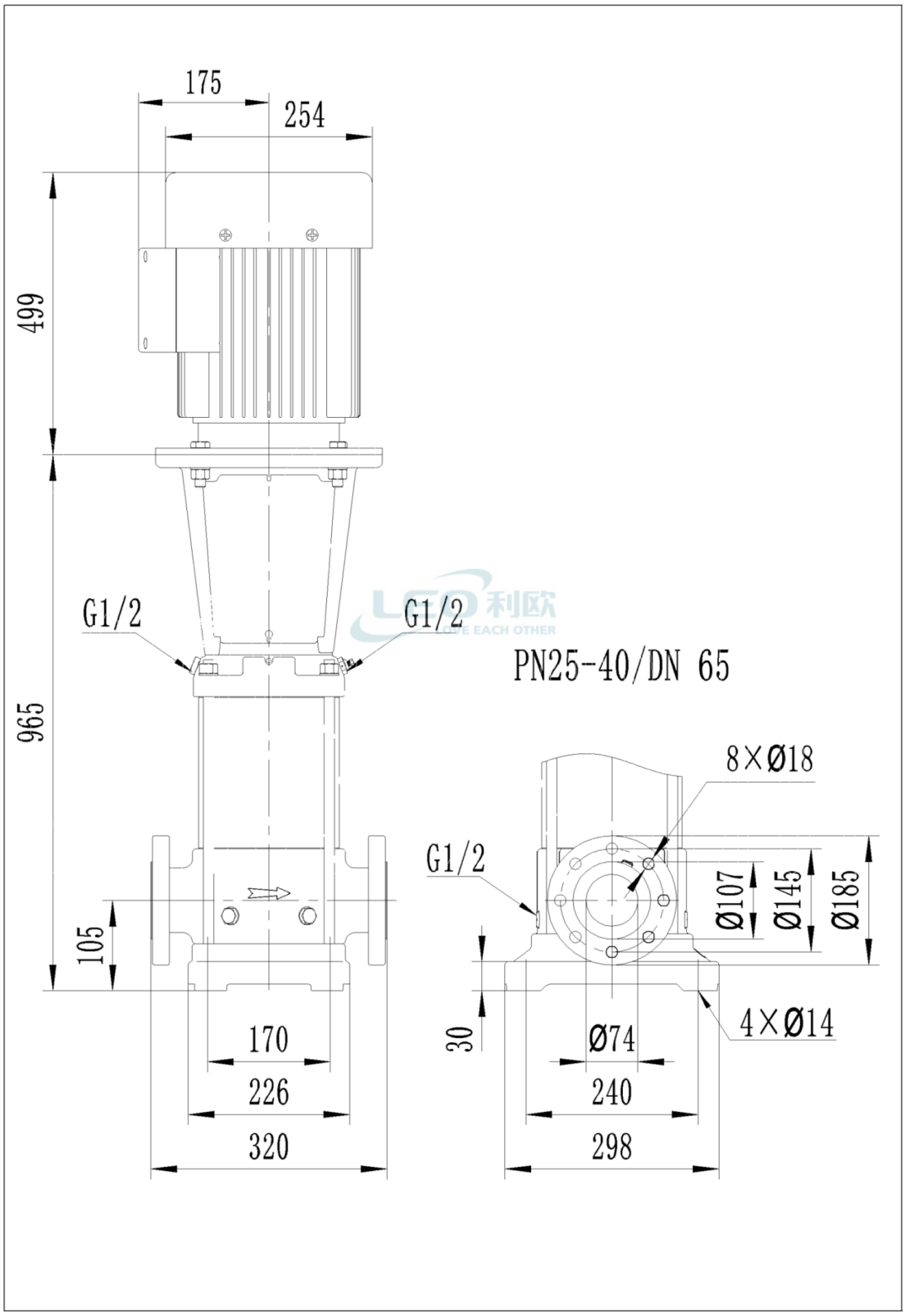

LEO 利欧	Structure picture LVR32-6-2	Manufacturer	LEO
		Address	China,Zhejiang,Wenling
		Contact	0576-89988888
		Date	2023/10/19
Project Name		Client Name	Spaceport
		Client Addr.	Куйбышева 95 Б
Item NO		Contacts	
		Contact	

LVR32,45,64,90 explosive view

54、Staybolt
53、Adjustable washer
52、Gasket 16
51、Hexagon nut (M16)
50、Sealing flat
49、Socket head cap crew(M10×25)
48、Hexagon screw
47、Gasket
46、Hexagon nut
45、Y2 series motors
44、Half-coupling
43、Socket head cap crew (M10×30)
42、Rivet (2×4)
41、Nameplate
40、Motor base
39、Socket head cap crew (M10×50)
38、Guarding plate
37、Socket head cap crew (M5×8)
36、Cartridge seal(22型)
35、Pump head
34、Vent plug assembly
33、Pump barrel
32、Socket head cap crew (M8×30)
31、Gusket 8
30、Final diffuser
29、Bolt
28、Diffuser with bearing
27、Alloy bearing (30)
26、Sleeve assembly
25、Medium diffuser
24、Guide bearing
23、Ring
22、Locking cap
21、Split conical sleeve
20b、Small impeller
20a、Impeller
19、Wearing ring
18、Wearing ring cover
17、Wearing ring
16、Guide disk
15、Primary diffuser
14、Shaft
13、Alloy bearing (22)
12、Splined bearing
11、Spring washer 8
10、Socket head cap crew(M8×15)
9、O-ring
8、Socket head cap crew (M6×10)
7、Gasket 6
6、Alloy bearing (22)
5、Base
4、O-ring Ø17×2.65
3、Filling plug
2、Hoop
1、Flange

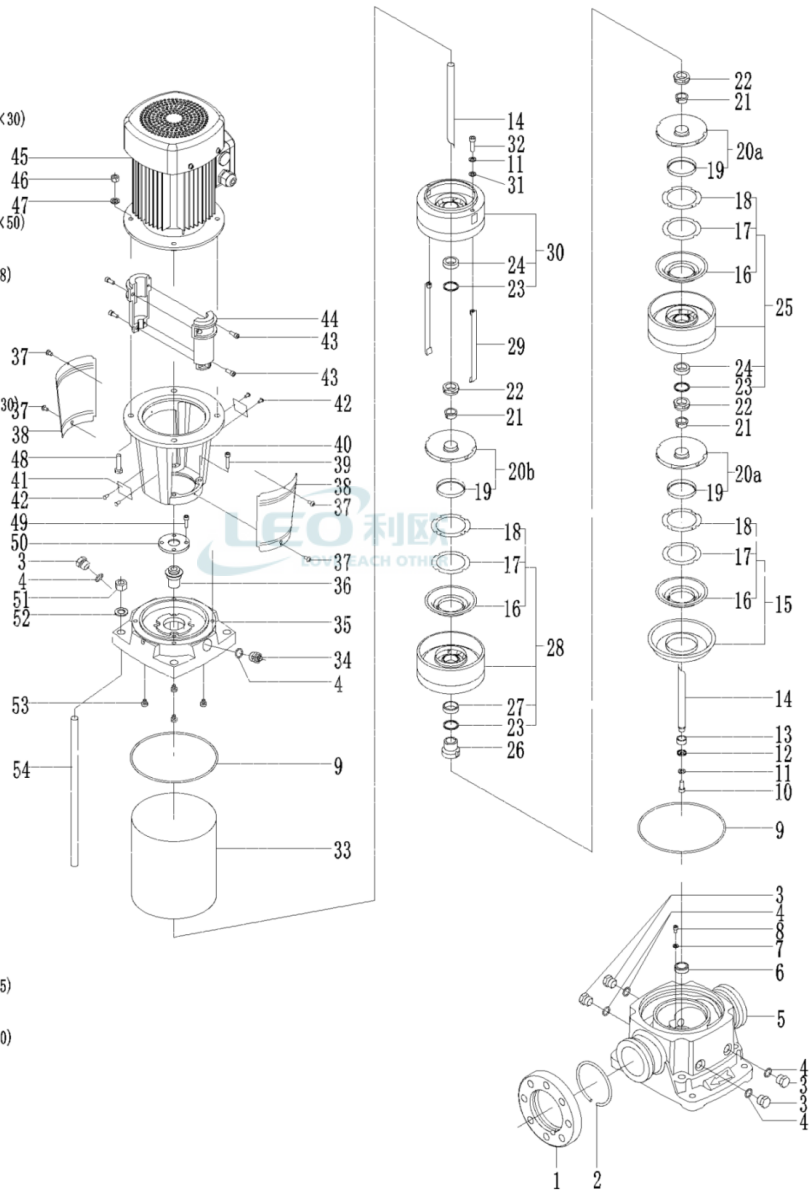
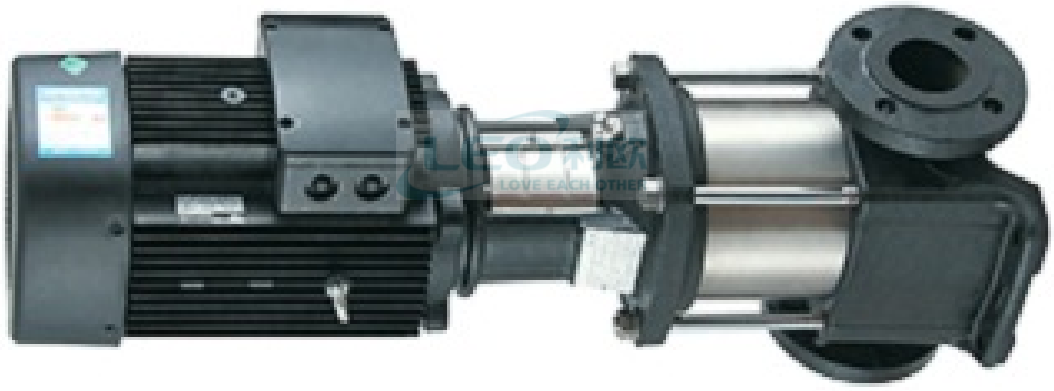
LEO 利欧	Physical picture LVR32-6-2	Manufacturer	LEO
		Address	China,Zhejiang,Wenling
		Contact	0576-89988888
		Date	2023/10/19
Project Name		Client Name	Spaceport
		Client Addr.	Куйбышева 95 Б
Item NO		Contacts	
		Contact