LEO 利欧	**Product Information** **LVR4-18**	Manufacturer	LEO
		Address	China,Zhejiang,Wenling
		Contact	0576-89988888
		Date	2023/10/16
Project Name		Client Name	Spaceport
		Client Addr.	Куйбышева 95
Item NO		Contacts	
		Contact	

Part NO.	50012227

Product Picture	Note
	LVR series verrtical multistage centrifugal pump is applicable to transfer liquids without solid particles<0.2mm and fiberslow viscositynon-inflammable non-explosive and not easy vaporization. Widely used in high-rise building water supply and drainageWater filtration and transportation, pipeline pressurization. High pressure flushing and cleaning system. Boiler feed water, cooling water circulation, water treatment system and other equipment supporting system. Ultrafiltration system, reverse osmosis system, distillation system, separator, swimming pool and other water treatment systems. Irrigation and drip irrigation systems in agriculture. food and beverage and fire fighting systems.

Nameplate parameters

flow	4 m³/h
head	145 m
speed	2900 rpm
number of stages	18

Technical

Flow range (m³/h)	1.5-8m3/h
Curve tolerance	ISO 9906 Annex A
Head range (m)	

Material

Impeller	AISI 304
Diffuser	AISI 304
Pump shaft	AISI 304
Pump flange	HT200
Motor base	HT200
Coupling	ferrous powder metallurgy
Pump barrel	AISI 304

Working conditions

Medium temperature (°C)	-20°C ~ +120°C
Max. ambient temperature (°C)	+40°C
Pumped medium	Clean water
Working pressure	16bar
Maximum inlet pressure	15bar

Installation

Connection method	Oval flange
Inlet / outlet dia.	G1 1/4

Motor

Motor phase	Three phase
Protection class	IP55
Motor poles	2
Insulation class	F
Motor power (KW)	4kW
Motor model	YX3-112M-2
Frequency	50Hz
Rated voltage (V)	380V

Rated current (A)	8.05A
Efficiency class	IE2\\IE3
Power factor	0.88
Efficiency (%)	

Weight/Packaging

Net weight (kg)	53.04
Gross weight (kg)	59.44
Package size	1139*295*340mm

LEO 利欧 LOVE EACH OTHER

LEO 利欧	Performance Curve LVR4-18	Manufacturer	LEO
		Address	China,Zhejiang,Wenling
		Contact	0576-89988888
		Date	2023/10/16
Project Name		Client Name	Spaceport
		Client Addr.	Куйбышева 95
Item NO		Contacts	
		Contact	

The hydraulic performance curve have been tested withWaterat°C,density 1000kg/m³,and at 1bar atmospherical pressure. GB32162016 Grande 3B

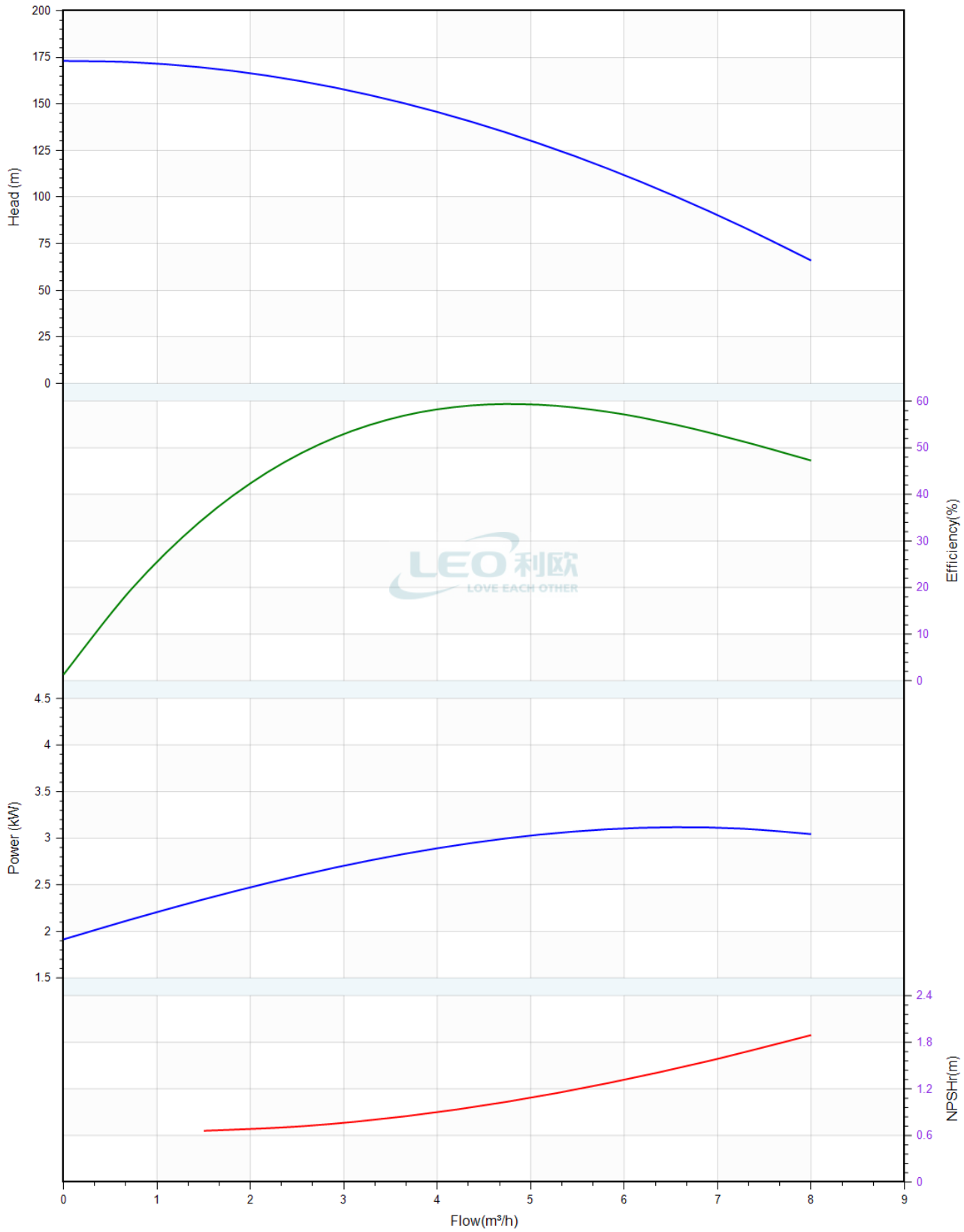

LEO 利欧	Pump Technical Parameters LVR4-18	Manufacturer	LEO
		Address	China,Zhejiang,Wenling
		Contact	0576-89988888
		Date	2023/10/16
Project Name		Client Name	Spaceport
		Client Addr.	Куйбышева 95
Item NO		Contacts	
		Contact	

Rated parameters	
Pump model	LVR4-18
Part NO.	50012227
Rated flow	4 m³/h
Rated head	145 m
Rated efficiency (%)	57
Power (kW)	2.77
Speed (rpm)	2900

Medium	
Pumped medium	Water
Working temperature (°C)	20
Medium density (kg/m³)	1000
Viscosity (mm²/s)	1

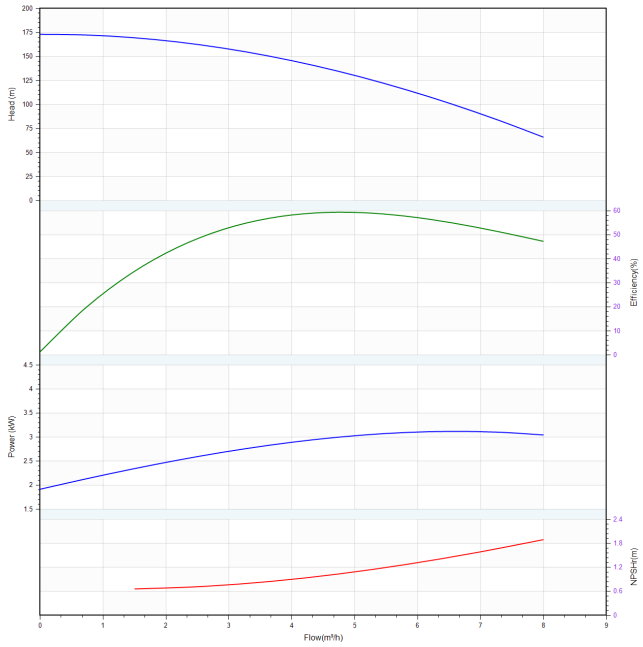

LEO 利欧
LOVE EACH OTHER

LEO 利欧	Dimension Drawing LVR4-18	Manufacturer	LEO
		Address	China,Zhejiang,Wenling
		Contact	0576-89988888
		Date	2023/10/16
Project Name		Client Name	Spaceport
		Client Addr.	Куйбышева 95
Item NO		Contacts	
		Contact	

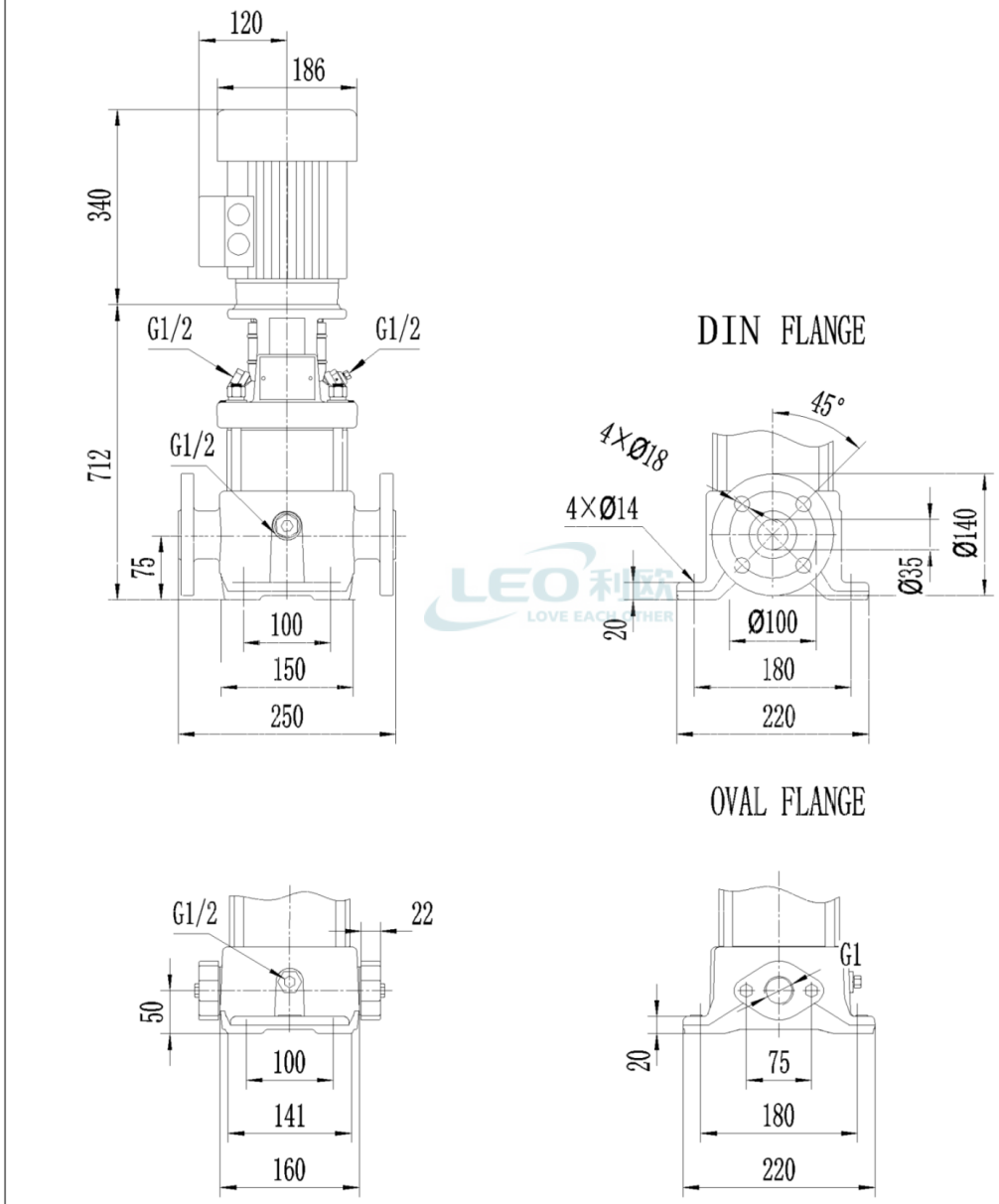

LEO 利欧	Structure picture LVR4-18	Manufacturer	LEO
		Address	China,Zhejiang,Wenling
		Contact	0576-89988888
		Date	2023/10/16
Project Name		Client Name	Spaceport
		Client Addr.	Куйбышева 95
Item NO		Contacts	
		Contact	

LVR 4,5

44、Wave spring
43、Motor base
42、Filling plug
41、Hexagon screw
40、Spring washer
39、Cartridge seal (type 12)
38、Straight pin Ø5×26
37、Motor (B14)
36、Half-coupling
35、Socket head cap crew
34、Cross recessed pan head screwM4×5
33、Guarding plate
32、Vent plug assembly
31、Locknut M12
30、Gasket12
29、Nameplate
28、Rivet 2×4
27、Staybolt M12
26、Final diffuser
25、Shaft
24、Orientation cover
23、Sleeve 2
22、Sleeve 26
21、Medium diffuser
20、Sleeve 13
19、Bearing ring
18、Diffuser with bearing
17、Impeller
16、Sleeve 4.5
15、Splined bearing
14、Locknut M8
13、Wearing ring cover
12、Wearing ring
11、Primary diffuser
10、Pump barrel
9、O-ring Ø135×3.55
8、Gasket ($1\frac{1}{4}$″)
7、Oval flange ($1\frac{1}{4}$″)
6、Gasket 8
5、Spring washer 8
4、Hexagon screw M8×35
3、Base
2、O ring Ø17×2.65
1、Drainage plug assembly

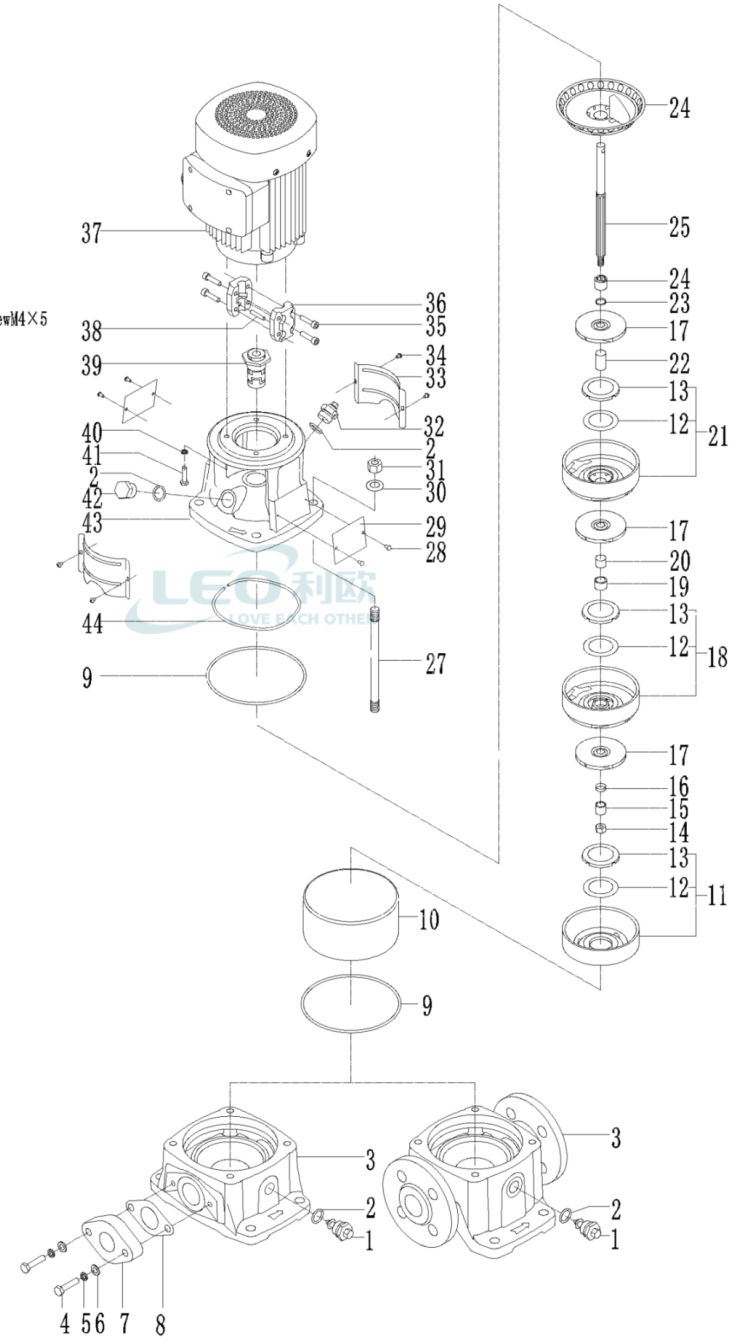
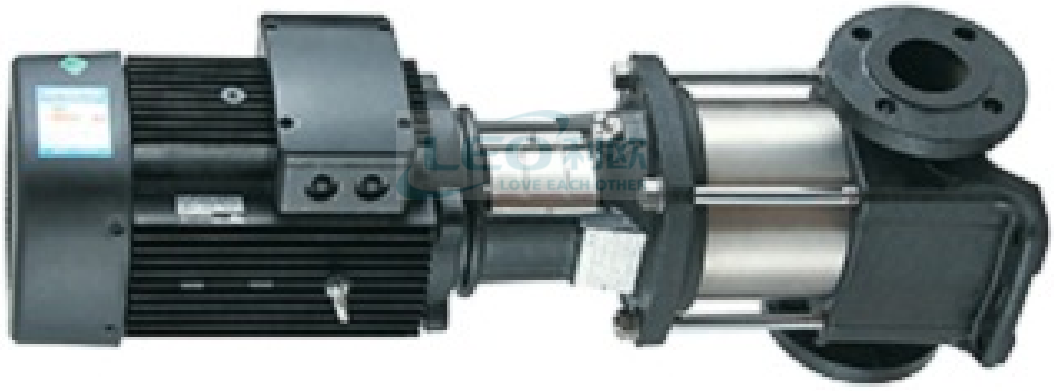
LEO 利欧	Physical picture LVR4-18	Manufacturer	LEO
		Address	China,Zhejiang,Wenling
		Contact	0576-89988888
		Date	2023/10/16
Project Name		Client Name	Spaceport
		Client Addr.	Куйбышева 95
Item NO		Contacts	
		Contact