| | | | |
|---|---|---|---|
| LEO 利欧 | Product Information<br>LVR45-9-2 | Manufacturer | LEO |
| | | Address | China,Zhejiang,Wenling |
| | | Contact | 0576-89988888 |
| | | Date | 2023/10/19 |
| Project Name | | Client Name | Spaceport |
| | | Client Addr. | Куйбышева 95 Б |
| Item NO | | Contacts | |
| | | Contact | |

| | |
|---|---|
| Part NO. | 50011498 |

| Product Picture | Note |
|---|---|
| | LVR series verrtical multistage centrifugal pump is applicable to transfer liquids without solid particles<0.2mm and fiberslow viscositynon-inflammable non-explosive and not easy vaporization. Widely used in high-rise building water supply and drainageWater filtration and transportation, pipeline pressurization. High pressure flushing and cleaning system. Boiler feed water, cooling water circulation, water treatment system and other equipment supporting system. Ultrafiltration system, reverse osmosis system, distillation system, separator, swimming pool and other water treatment systems. Irrigation and drip irrigation systems in agriculture. food and beverage and fire fighting systems. |

## Nameplate parameters

| | |
|---|---|
| flow | 45 m³/h |
| head | 176 m |
| speed | 2900 rpm |
| number of stages | 9 |

## Technical

| | |
|---|---|
| Flow range (m³/h) | 22-58m3/h |
| Curve tolerance | ISO 9906 Annex A |
| Head range (m) | |

## Material

| | |
|---|---|
| Impeller | AISI 304 |
| Diffuser | AISI 304 |
| Pump shaft | AISI 304 |
| Pump flange | ZG35 |
| Motor base | ZG35 |
| Coupling | QT400 |
| Pump barrel | AISI 304 |

## Working conditions

| | |
|---|---|
| Medium temperature (°C) | -20°C ~ +120°C |
| Max. ambient temperature (°C) | +40°C |
| Pumped medium | Clean water |
| Working pressure | 30bar |
| Maximum inlet pressure | 15bar |

## Installation

| | |
|---|---|
| Connection method | DIN flange |
| Inlet / outlet dia. | DN80 |

## Motor

| | |
|---|---|
| Motor phase | Three phase |
| Protection class | IP55 |
| Motor poles | 2 |
| Insulation class | F |
| Motor power (KW) | 30kW |
| Motor model | Y2-200L1-2E |
| Frequency | 50Hz |
| Rated voltage (V) | 380V |

| | Product Information<br>LVR45-9-2 | Manufacturer | LEO |
|---|---|---|---|
| | | Address | China,Zhejiang,Wenling |
| | | Contact | 0576-89988888 |
| | | Date | 2023/10/19 |
| Project Name | | Client Name | Spaceport |
| | | Client Addr. | Куйбышева 95 Б |
| Item NO | | Contacts | |
| | | Contact | |

| | |
|---|---|
| Rated current (A) | 55.1A |
| Efficiency class | IE2\\IE3 |
| Power factor | 0.9 |
| Efficiency (%) | |

## Weight/Packaging

| | |
|---|---|
| Net weight (kg) | 330.9 |
| Gross weight (kg) | 364 |
| Package size | 2025*475*689mm |

| | | | |
|---|---|---|---|
| LEO 利欧 | Performance Curve<br>LVR45-9-2 | Manufacturer | LEO |
| | | Address | China,Zhejiang,Wenling |
| | | Contact | 0576-89988888 |
| | | Date | 2023/10/19 |
| Project Name | | Client Name | Spaceport |
| | | Client Addr. | Куйбышева 95 Б |
| Item NO | | Contacts | |
| | | Contact | |

The hydraulic performance curve have been tested withWaterat°C,density 1000kg/m³,and at 1bar atmospherical pressure. GB32162016 Grande 3B

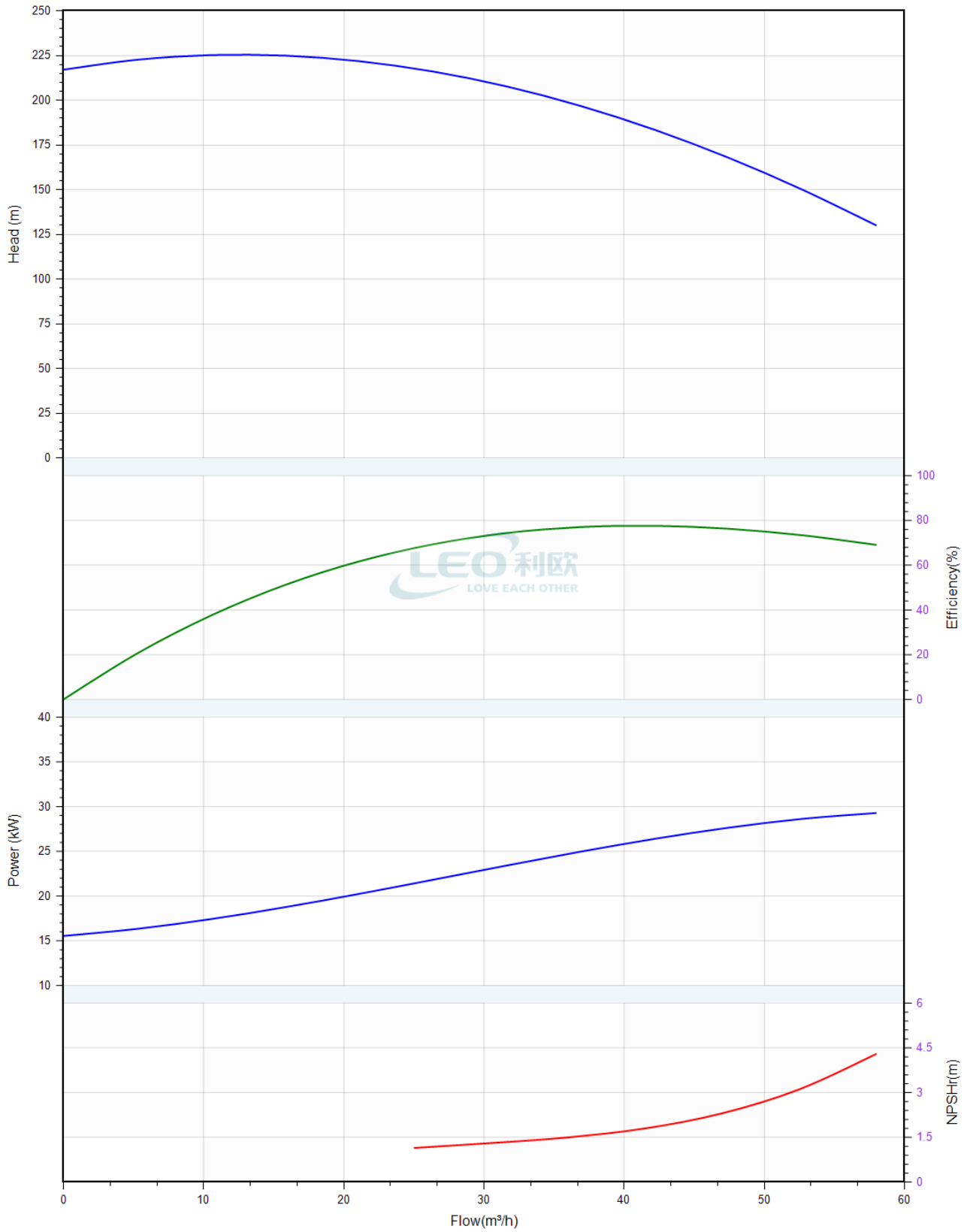

| | | | |
|---|---|---|---|
| LEO 利欧 | Pump Technical Parameters<br>LVR45-9-2 | Manufacturer | LEO |
| | | Address | China,Zhejiang,Wenling |
| | | Contact | 0576-89988888 |
| | | Date | 2023/10/19 |
| Project Name | | Client Name | Spaceport |
| | | Client Addr. | Куйбышева 95 Б |
| Item NO | | Contacts | |
| | | Contact | |

| Rated parameters | |
|---|---|
| Pump model | LVR45-9-2 |
| Part NO. | 50011498 |
| Rated flow | 45 $m^3/h$ |
| Rated head | 176 m |
| Rated efficiency (%) | 77.5 |
| Power (kW) | 27.8 |
| Speed (rpm) | 2900 |

| Medium | |
|---|---|
| Pumped medium | Water |
| Working temperature (°C) | 20 |
| Medium density (kg/$m^3$) | 1000 |
| Viscosity ($mm^2/s$) | 1 |

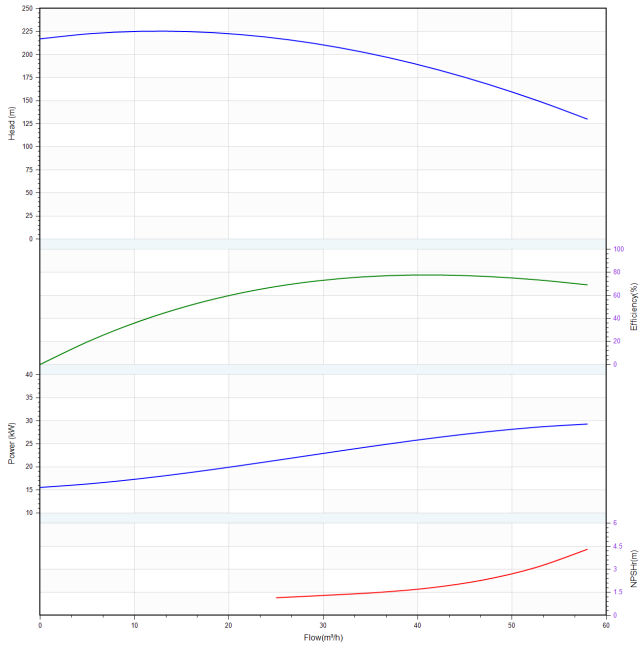


LEO 利欧
LOVE EACH OTHER

| | | | |
|---|---|---|---|
| LEO 利欧 | Dimension Drawing<br>LVR45-9-2 | Manufacturer | LEO |
| | | Address | China,Zhejiang,Wenling |
| | | Contact | 0576-89988888 |
| | | Date | 2023/10/19 |
| Project Name | | Client Name | Spaceport |
| | | Client Addr. | Куйбышева 95 Б |
| Item NO | | Contacts | |
| | | Contact | |

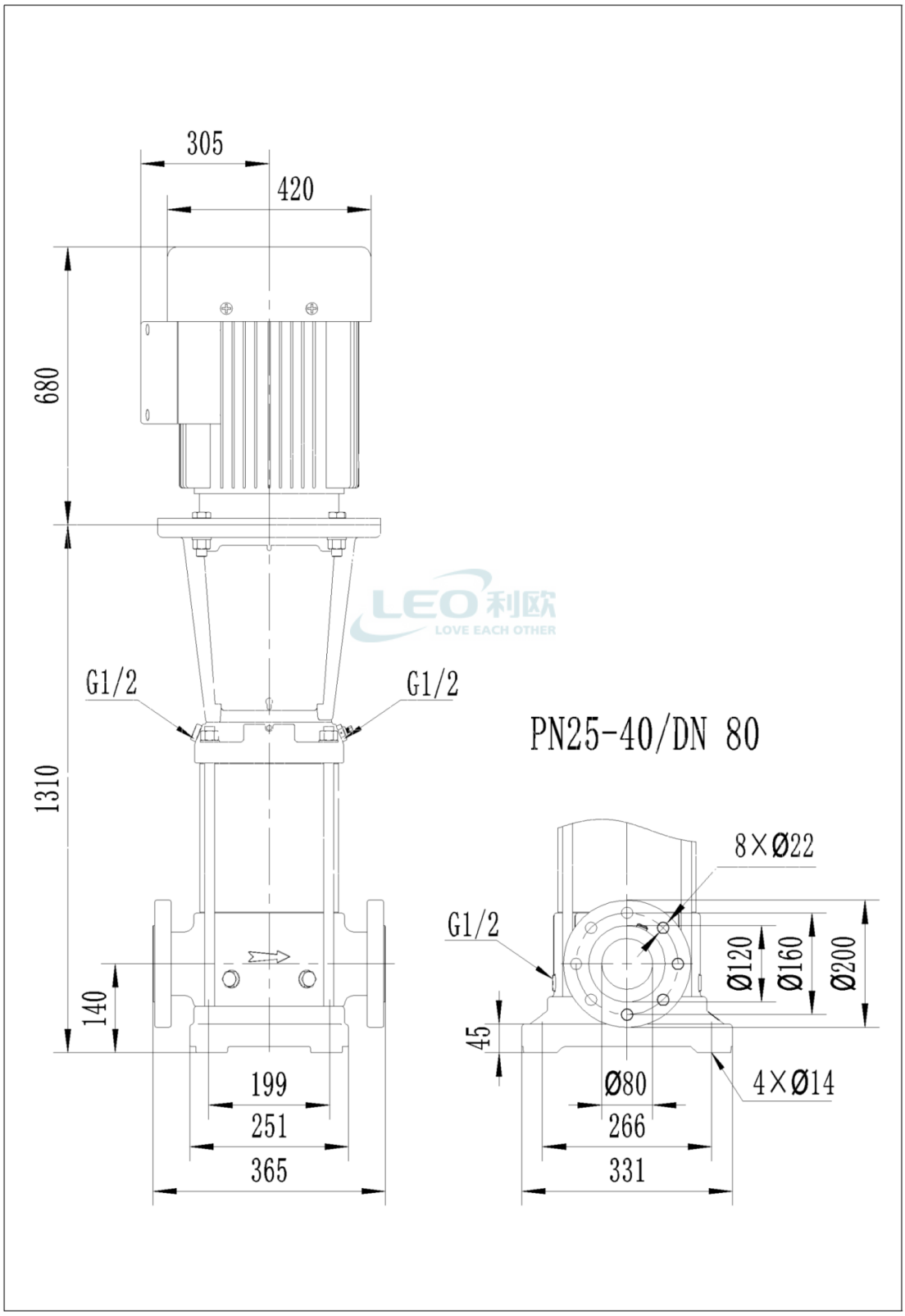

| | | | |
|---|---|---|---|
| LEO 利欧 | Structure picture<br>LVR45-9-2 | Manufacturer | LEO |
| | | Address | China,Zhejiang,Wenling |
| | | Contact | 0576-89988888 |
| | | Date | 2023/10/19 |
| Project Name | | Client Name | Spaceport |
| | | Client Addr. | Куйбышева 95 Б |
| Item NO | | Contacts | |
| | | Contact | |

# LVR32, 45, 64, 90 explosive view

54、Staybolt
53、Adjustable washer
52、Gasket 16
51、Hexagon nut (M16)
50、Sealing flat
49、Socket head cap crew(M10×25)
48、Hexagon screw
47、Gasket
46、Hexagon nut
45、Y2 series motors
44、Half-coupling
43、Socket head cap crew (M10×30)
42、Rivet (2×4)
41、Nameplate
40、Motor base
39、Socket head cap crew (M10×50)
38、Guarding plate
37、Socket head cap crew (M5×8)
36、Cartridge seal(22型)
35、Pump head
34、Vent plug assembly
33、Pump barrel
32、Socket head cap crew (M8×30)
31、Gusket 8
30、Final diffuser
29、Bolt
28、Diffuser with bearing
27、Alloy bearing (30)
26、Sleeve assembly
25、Medium diffuser
24、Guide bearing
23、Ring
22、Locking cap
21、Split conical sleeve
20b、Small impeller
20a、Impeller
19、Wearing ring
18、Wearing ring cover
17、Wearing ring
16、Guide disk
15、Primary diffuser
14、Shaft
13、Alloy bearing (22)
12、Splined bearing
11、Spring washer 8
10、Socket head cap crew(M8×15)
9、O-ring
8、Socket head cap crew (M6×10)
7、Gasket 6
6、Alloy bearing (22)
5、Base
4、O-ring Ø17×2.65
3、Filling plug
2、Hoop
1、Flange

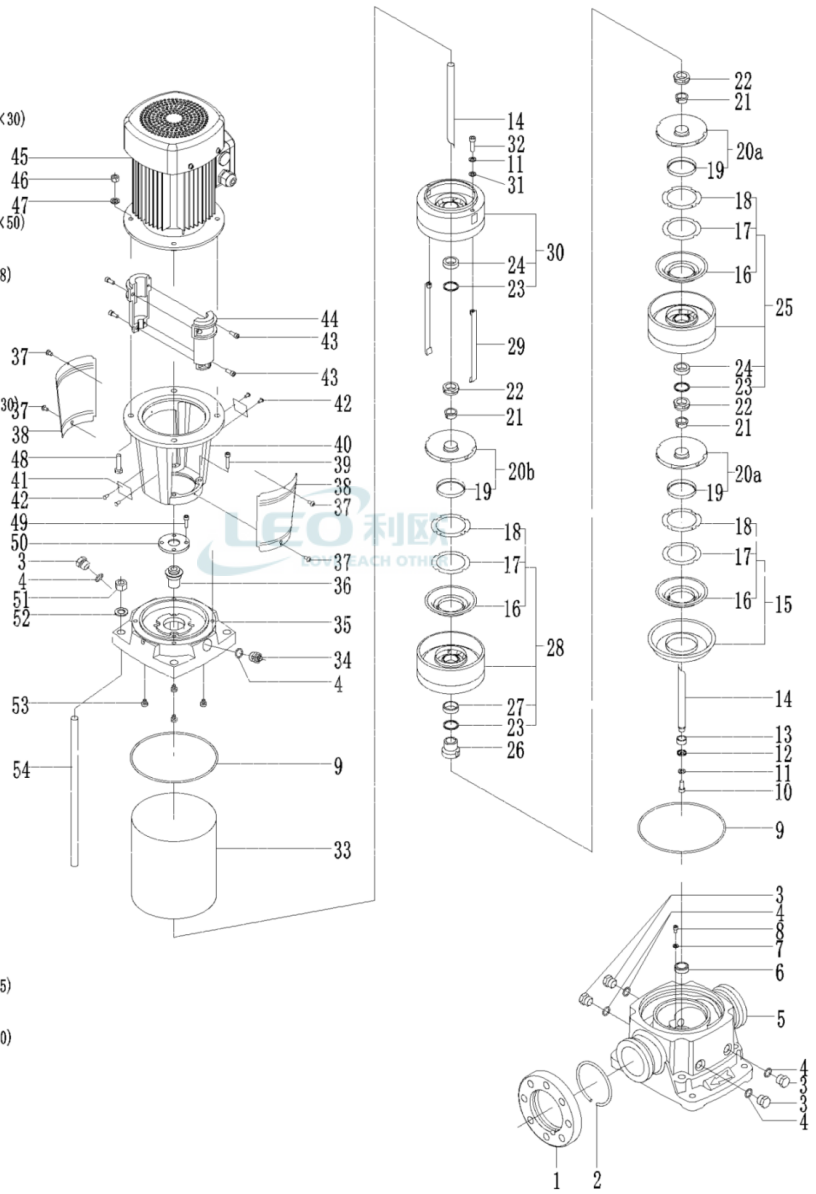
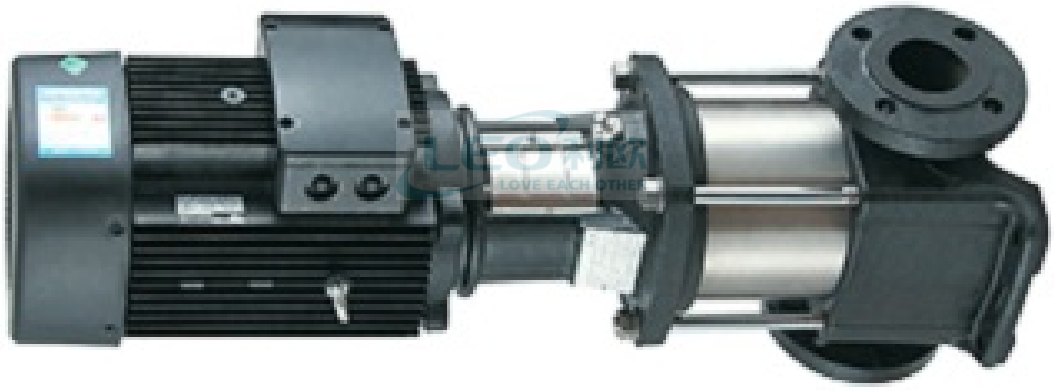
| | | | |
|---|---|---|---|
| LEO 利欧 | Physical picture<br>LVR45-9-2 | Manufacturer | LEO |
| | | Address | China,Zhejiang,Wenling |
| | | Contact | 0576-89988888 |
| | | Date | 2023/10/19 |
| Project Name | | Client Name | Spaceport |
| | | Client Addr. | Куйбышева 95 Б |
| Item NO | | Contacts | |
| | | Contact | |