| | | | |
|---|---|---|---|
| LEO 利欧 | Product Information<br>LVR5-26 | Manufacturer | LEO |
| | | Address | China,Zhejiang,Wenling |
| | | Contact | 0576-89988888 |
| | | Date | 2023/10/17 |
| Project Name | | Client Name | Spaceport |
| | | Client Addr. | Куйбышева 95 |
| Item NO | | Contacts | |
| | | Contact | |

| | |
|---|---|
| Part NO. | 50005552 |

| Product Picture | Note |
|---|---|
| | LVR series verrtical multistage centrifugal pump is applicable to transfer liquids without solid particles<0.2mm and fiberslow viscositynon-inflammable non-explosive and not easy vaporization. Widely used in high-rise building water supply and drainageWater filtration and transportation, pipeline pressurization. High pressure flushing and cleaning system. Boiler feed water, cooling water circulation, water treatment system and other equipment supporting system. Ultrafiltration system, reverse osmosis system, distillation system, separator, swimming pool and other water treatment systems. Irrigation and drip irrigation systems in agriculture. food and beverage and fire fighting systems. |

## Nameplate parameters

| | |
|---|---|
| flow | 5 m³/h |
| head | 145 m |
| speed | 2900 rpm |
| number of stages | 26 |

## Technical

| | |
|---|---|
| Flow range (m³/h) | 2.5-8.5m3/h |
| Curve tolerance | ISO 9906 Annex A |
| Head range (m) | |

## Material

| | |
|---|---|
| Impeller | AISI 304 |
| Diffuser | AISI 304 |
| Pump shaft | AISI 304 |
| Pump flange | HT200 |
| Motor base | HT200 |
| Coupling | ferrous powder metallurgy |
| Pump barrel | AISI 304 |

## Working conditions

| | |
|---|---|
| Medium temperature (°C) | -20°C ~ +120°C |
| Max. ambient temperature (°C) | +40°C |
| Pumped medium | Clean water |
| Working pressure | 16bar |
| Maximum inlet pressure | 15bar |

## Installation

| | |
|---|---|
| Connection method | Oval flange |
| Inlet / outlet dia. | G1 1/4 |

## Motor

| | |
|---|---|
| Motor phase | Three phase |
| Protection class | IP55 |
| Motor poles | 2 |
| Insulation class | F |
| Motor power (KW) | 4kW |
| Motor model | YX3-112M-2 |
| Frequency | 50Hz |
| Rated voltage (V) | 380V |

| | |
|---|---|
| Rated current (A) | 8.05A |
| Efficiency class | IE2\\IE3 |
| Power factor | 0.88 |
| Efficiency (%) | |

## Weight/Packaging

| | |
|---|---|
| Net weight (kg) | 56.94 |
| Gross weight (kg) | 63.3 |
| Package size | 1355*295*340mm |

LEO 利欧 LOVE EACH OTHER

| | | | |
|---|---|---|---|
| LEO 利欧 | Performance Curve<br>LVR5-26 | Manufacturer | LEO |
| | | Address | China,Zhejiang,Wenling |
| | | Contact | 0576-89988888 |
| | | Date | 2023/10/17 |
| Project Name | | Client Name | Spaceport |
| | | Client Addr. | Куйбышева 95 |
| Item NO | | Contacts | |
| | | Contact | |

The hydraulic performance curve have been tested withWaterat°C,density 1000kg/m³,and at 1bar atmospherical pressure. GB32162016 Grande 3B

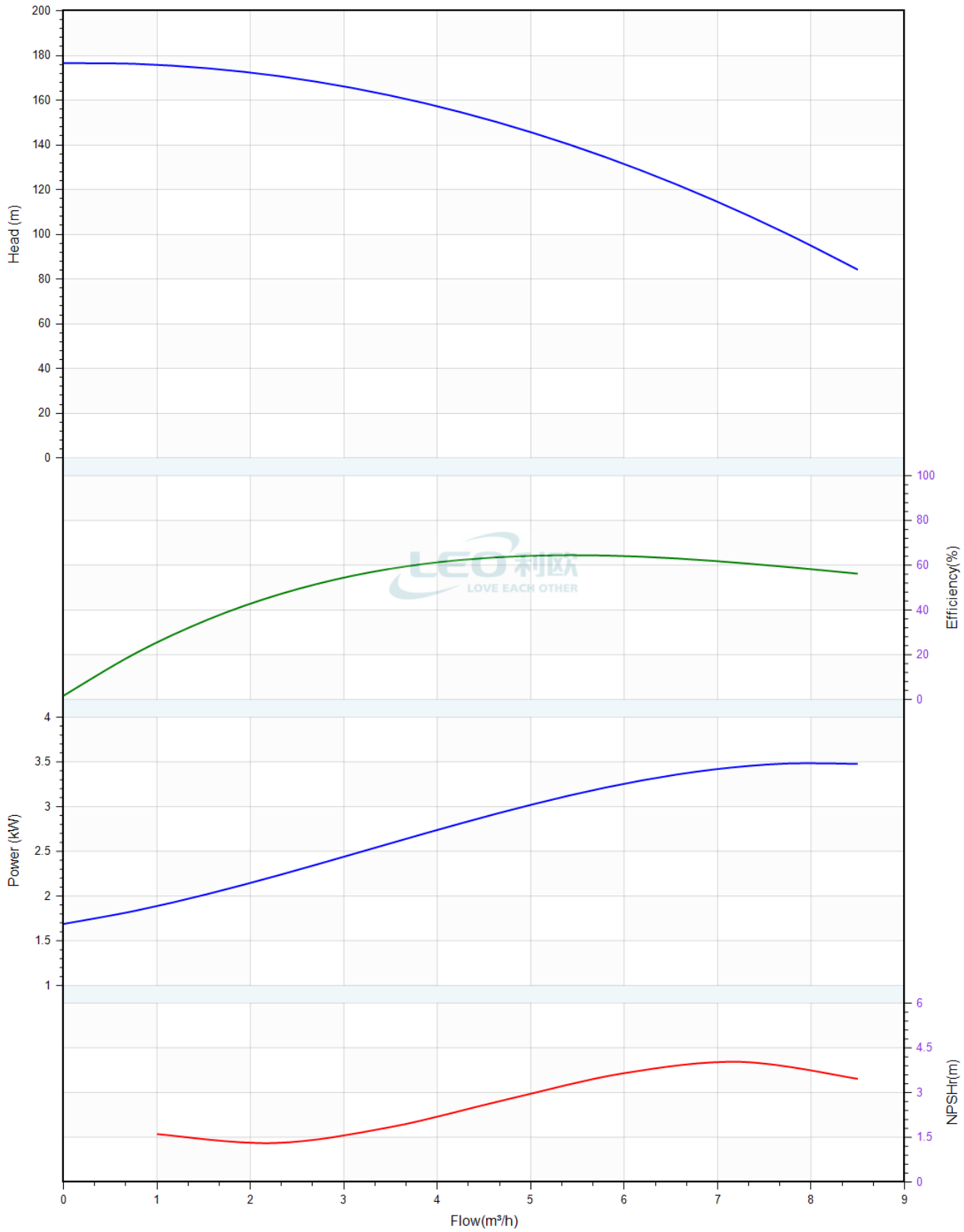

| | | | |
|---|---|---|---|
| LEO 利欧 | Pump Technical Parameters<br>LVR5-26 | Manufacturer | LEO |
| | | Address | China,Zhejiang,Wenling |
| | | Contact | 0576-89988888 |
| | | Date | 2023/10/17 |
| Project Name | | Client Name | Spaceport |
| | | Client Addr. | Куйбышева 95 |
| Item NO | | Contacts | |
| | | Contact | |

| Rated parameters | |
|---|---|
| Pump model | LVR5-26 |
| Part NO. | 50005552 |
| Rated flow | 5 m³/h |
| Rated head | 145 m |
| Rated efficiency (%) | 60 |
| Power (kW) | 3.29 |
| Speed (rpm) | 2900 |

| Medium | |
|---|---|
| Pumped medium | Water |
| Working temperature (°C) | 20 |
| Medium density (kg/m³) | 1000 |
| Viscosity (mm²/s) | 1 |

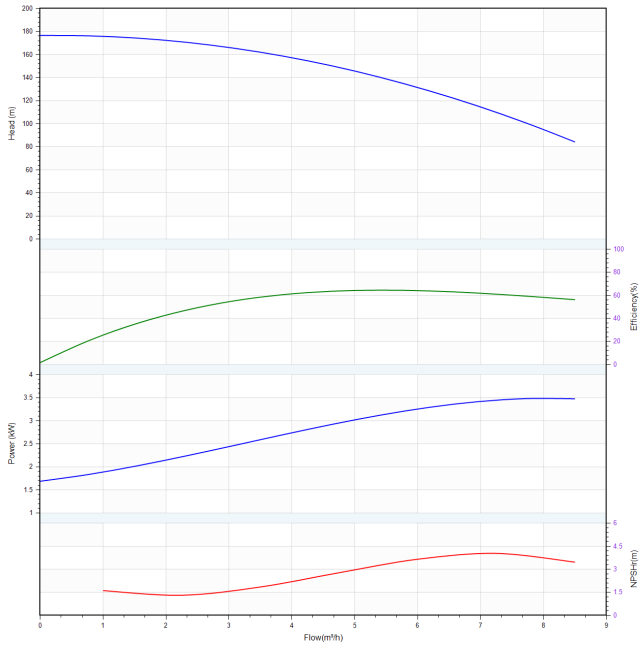


LEO 利欧
LOVE EACH OTHER

| | | | |
|---|---|---|---|
| LEO 利欧 | Dimension Drawing<br>LVR5-26 | Manufacturer | LEO |
| | | Address | China,Zhejiang,Wenling |
| | | Contact | 0576-89988888 |
| | | Date | 2023/10/17 |
| Project Name | | Client Name | Spaceport |
| | | Client Addr. | Куйбышева 95 |
| Item NO | | Contacts | |
| | | Contact | |

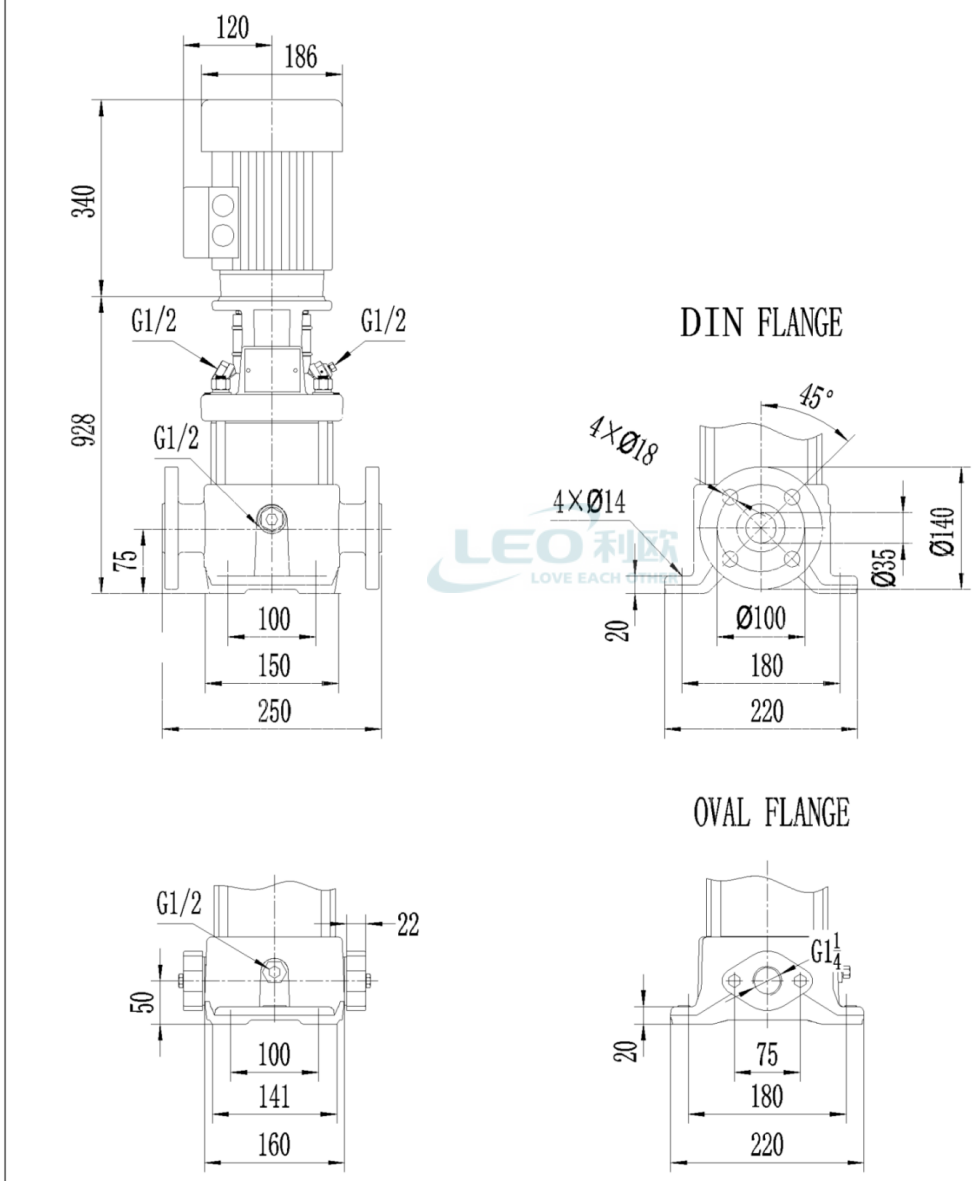

| | | | |
|---|---|---|---|
| LEO 利欧 | Structure picture<br>LVR5-26 | Manufacturer | LEO |
| | | Address | China,Zhejiang,Wenling |
| | | Contact | 0576-89988888 |
| | | Date | 2023/10/17 |
| Project Name | | Client Name | Spaceport |
| | | Client Addr. | Куйбышева 95 |
| Item NO | | Contacts | |
| | | Contact | |

# LVR 4,5

44、Wave spring
43、Motor base
42、Filling plug
41、Hexagon screw
40、Spring washer
39、Cartridge seal (type 12)
38、Straight pin Ø5×26
37、Motor (B14)
36、Half-coupling
35、Socket head cap crew
34、Cross recessed pan head screwM4×5
33、Guarding plate
32、Vent plug assembly
31、Locknut M12
30、Gasket12
29、Nameplate
28、Rivet 2×4
27、Staybolt M12
26、Final diffuser
25、Shaft
24、Orientation cover
23、Sleeve 2
22、Sleeve 26
21、Medium diffuser
20、Sleeve 13
19、Bearing ring
18、Diffuser with bearing
17、Impeller
16、Sleeve 4.5
15、Splined bearing
14、Locknut M8
13、Wearing ring cover
12、Wearing ring
11、Primary diffuser
10、Pump barrel
9、O-ring Ø135×3.55
8、Gasket ($1\frac{1}{4}$″)
7、Oval flange ($1\frac{1}{4}$″)
6、Gasket 8
5、Spring washer 8
4、Hexagon screw M8×35
3、Base
2、O ring Ø17×2.65
1、Drainage plug assembly

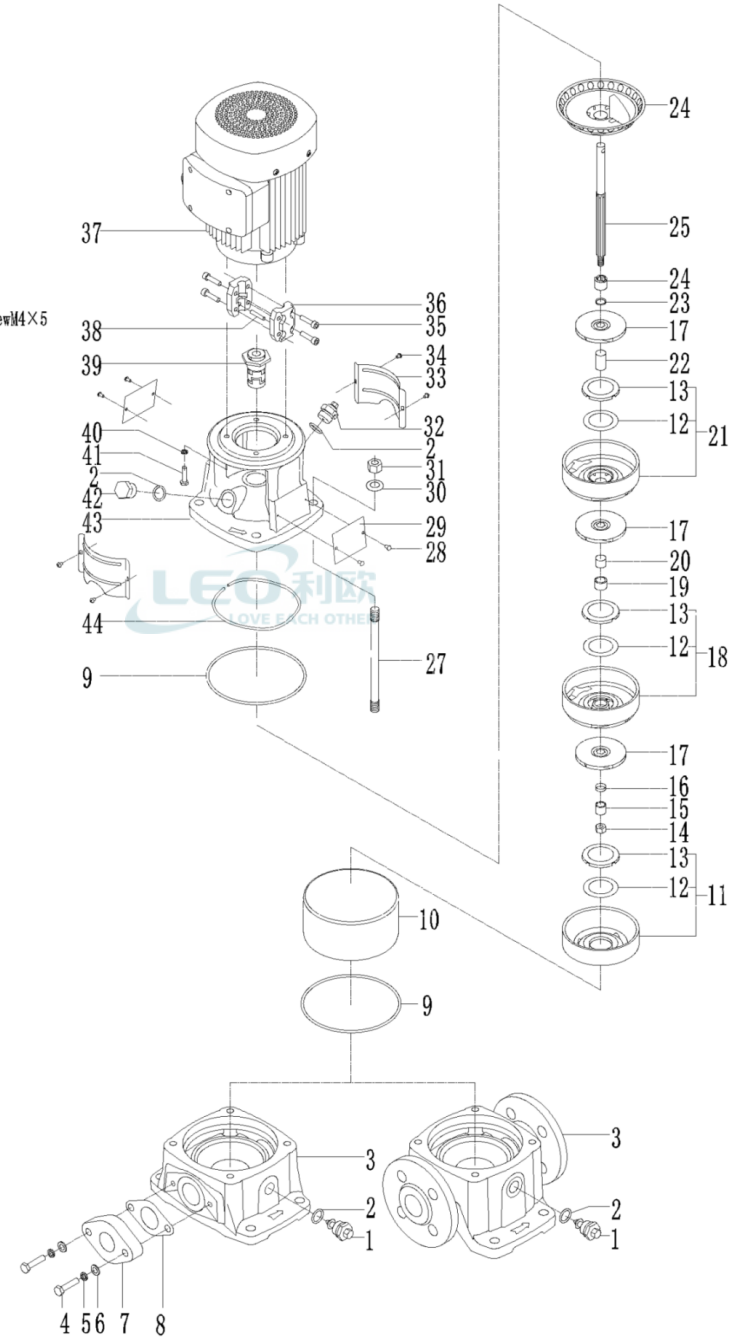
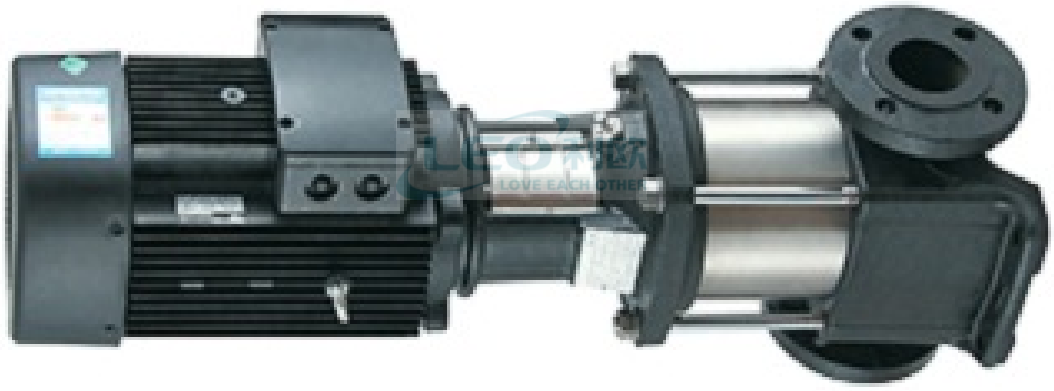
| | | | |
|---|---|---|---|
| LEO 利欧 | Physical picture<br>LVR5-26 | Manufacturer | LEO |
| | | Address | China,Zhejiang,Wenling |
| | | Contact | 0576-89988888 |
| | | Date | 2023/10/17 |
| Project Name | | Client Name | Spaceport |
| | | Client Addr. | Куйбышева 95 |
| Item NO | | Contacts | |
| | | Contact | |