EBARA

Japanese Technology since 1912

Ego Circulators

Databook

EBARA

Japanese Technology since 1912

INDEX

Ego Range

GENERAL INTRODUCTION	**HIGH EFFICIENCY CIRCULATORS**	6
THREADED CIRCULATORS	***Ego***	13
THREADED/FLANGED CIRCULATORS	***Ego* easy** NEW	19
FLANGED CIRCULATORS	***Ego* slim**	27
	***Ego* (12 and 18 m versions)** NEW	37
CIRCULATORS IN BRONZE (FOR SANITARY WATER)	***Ego* B - *Ego* B easy - Ego B slim**	44

The content of this publication should not be considered mandatory. EBARA Pumps Europe S.p.A. reserves the right to change the content without prior notice.

Ego Range

HIGH PERFORMANCE ELECTRONIC CIRCULATORS

in cast iron with cataphoresis coating

GENERAL FEATURES

"*Ego*" is a cutting-edge range of electronic circulators that fully comply with European Directive ErP 2009/125/CE.
All *Ego* circulators feature the **ECM technology (electronically commuted motor with rotor equipped with permanent magnets)**, that enables automatic and continuous regulation of the pump (flow rate/head) depending on the actual requirements of the system, ensuring important energy savings.

APPLICATIONS

Ego circulators are specifically designed for heating systems and circulation of liquids in air-conditioning systems.

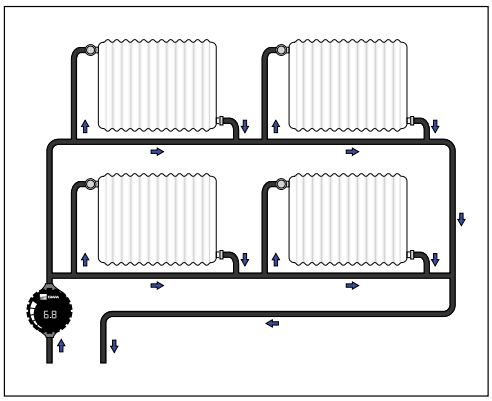

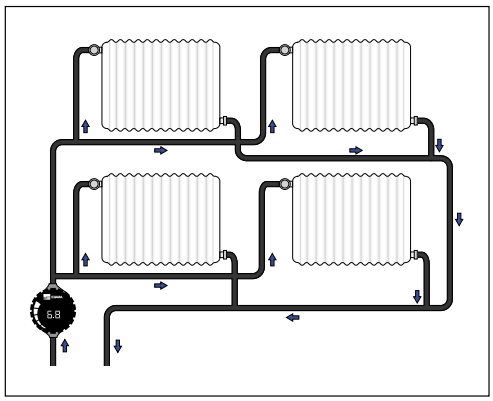

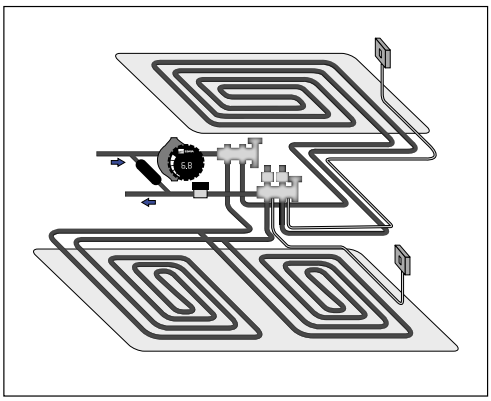

Heating systems

The pumps are suitable for single-pipe systems, two-pipe systems, underfloor heating systems and mixing loops of great installations. All *Ego* circulators automatically and autonomously control the differential pressure, adjusting pump performance in accordance with heating requirements.

Air-conditioning systems

Please refer to the minimum allowed temperatures of every product range to see how to use the *Ego* pumps. Some models are suitable for circulation at temperatures below 0°C (they are, therefore, particularly recommended for air-conditioning and/or refrigeration systems).

CONSTRUCTION

All *Ego* pumps are wet-rotor type; therefore, the pump and the motor make up a single unit with no mechanical seal; rotor bearings are lubricated directly by the pumped liquid. One of the most important features of *Ego* circulators is **the rotor can**, made of **a single part in AISI 316 stainless steel without welding points**: this solution, present on all *Ego* models, ensures hermetic, stable and reliable separation of the stator from the parts that come into contact with the liquid.

Other design features common to all *Ego* models are the following:

- Rotor in material resistant to corrosion
- Pump body in cataphoresis treated cast iron
- Low-friction bearings with consequent low noise emissions and reduced power consumption

For details on materials used please refer to the technical data sheets of every model.

The content of this publication should not be considered mandatory. EBARA Pumps Europe S.p.A. reserves the right to change the content without prior notice.

HIGH PERFORMANCE ELECTRONIC CIRCULATORS

in cast iron with cataphoresis coating

PUMPED LIQUIDS

Ego circulators are suitable for the circulation of:

- clean, non-aggressive and non-explosive, free of solid particles or fibres (in compliance with VDI 2035)
- water/glycol mixtures

Liquid viscosity

During pump selection phase, one of the most important criteria is liquid viscosity that affects (reduces) the maximum performance of the circulator. In particular, **when using water/glycol mixtures with concentrations higher than 20%, the final viscosity should be verified carefully,** as it represents the criteria for selecting the most suitable circulator (contact our technical support centre for further information).

Hydraulic performance and all main technical data given in this catalogue refer to liquids with viscosity of 1mm^2/s at 18°C.

Liquid and room temperature

Allowed fluid temperature range:

- Mod. *Ego* small (mod. *Ego* -/40, -/60, -/80): from -10 to +110 °C
- Mod. *Ego* medium (mod. *Ego* Easy –60, -80, -100): from -10 to +110 °C
- Mod. *Ego* large (mod. *Ego* slim 40, 50 - *Ego* 50, 65, 80, 100): from -10 to +110 °C
- Mod. *Ego* B for sanitary water: from +5 to +65 °C

Room temperature allowed ranges from 0 to 40°C, with relative air humidity below 95%. In the event of use with fluids at low temperature, room temperature should always be lower than liquid temperature to prevent condesate from building up on stator casing.

Input pressure

In order to avoid noise, cavitation phenomena and damaging the bearing, it is essential to ensure a minimum pressure at suction inlet at all times (check the manuals of every model to see the minimum pressure values in relation to fluid temperature).

Maximum operating pressure

The maximum operating pressure for all ***Ego* models is 1 MPa (10 bar) – PN10.**

ASSEMBLY POSITION

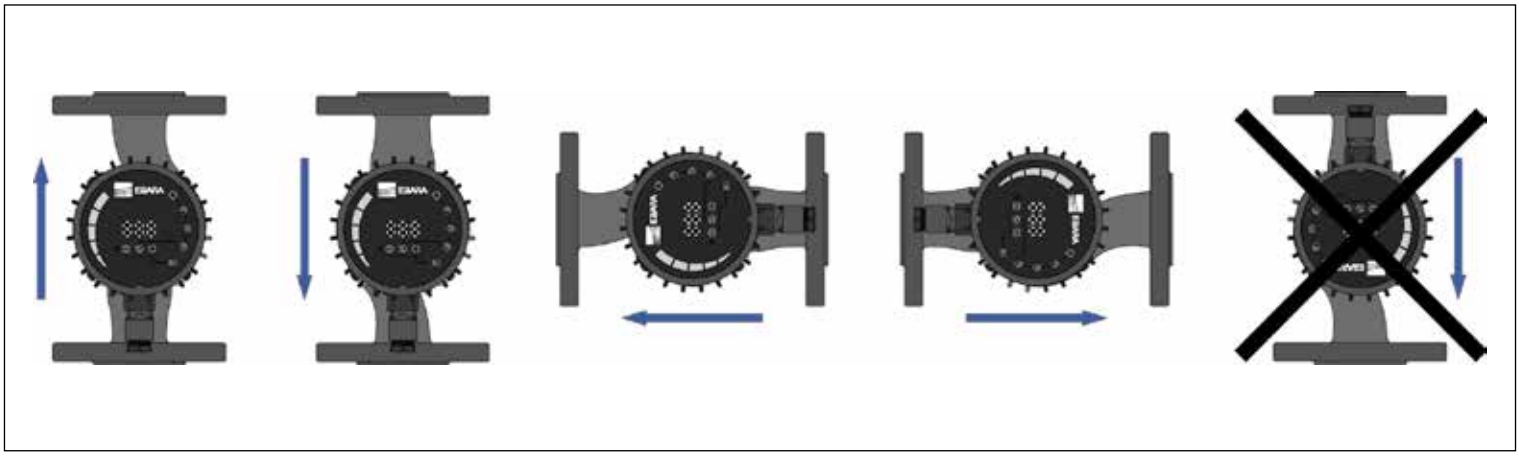

All *Ego* circulators should be installed with the **motor shaft in full horizontal position**, as shown in the figure above (example valid for all models). **The power cord should never be positioned upwards** (it may facilitate water inflow into the terminal box): in these cases, you should rotate the electronic unit or pump's body (please refer to the manual).

The content of this publication should not be considered mandatory. EBARA Pumps Europe S.p.A. reserves the right to change the content without prior notice.

ELECTRICAL FEATURES AND REGULATION

All *Ego* models are equipped with synchronous motor with rotor with permanent magnets and built-in frequency converter (ECM technology); **the electronic board measures the current consumption and calculates the instant pressure and flow rate to ensure continuous adjustment of hydraulic performance.** If the requested flow rate drops (usually when system valves close), the frequency converter automatically reduces the number of revolutions and, therefore, the power consumption. Variations may reach to 1/5 of maximum pump capacity.

Therefore, this technology ensures:

- **Continuous adjustment of performance in accordance with the actual requirements of the system**
- **High efficiency**
- **Great starting torque (automatic release even after long periods of inactivity)**
- **Complete motor protection**

Supplied voltage

The supplied voltage for all *Ego* models is **1~230V - 50/60 Hz**

Control modes

The built-in electronic board enables, depending on the model, various control modes such as:

- **Automatic regulation**
- **ΔP-v Proportional pressure**
- **ΔP-c Constant pressure**
- **Constant speed**
- **Current limit control**
- **Power limit control**

(Please refer to the data sheets of every model to check the available control modes).

The content of this publication should not be considered mandatory. EBARA Pumps Europe S.p.A. reserves the right to change the content without prior notice.

CONNECTIONS AND REMOTE CONTROL

Depending on the models, the following additional connections are available:

a) Analog external regulation (contact 0-10V)

The external contact 0-10V can be used in various modes:

- in "constant speed" regulation mode, the external contact 0-10V enables switching from a constant curve to another, according to the value of the input signal.
- in "proportional pressure" regulation mode, the external contact 0-10V enables switching from a variable curve to another, according to the value of the input signal.

With signals below 1V, the circulator enters stand-by mode.

b) Control from PC (Ethernet connection)

Some *Ego* models can be fully programmed and controlled remotely via the PC, using an Ethernet connection. The connections modes are 2:

- **Direct connection** “circulator – PC” (with CROSS-OVER type cable) - **Fig. 1**
- **Network connection** via router (with PATCH cable) - **Fig. 2**

1.

DIRECT CONNECTION

2.

NETWORK CONNECTIONS

Once you have completed the Ethernet connection, you can access the circulator using any internet browser (Chrome, Internet Explorer, Firefox, etc.) typing in the IP address of the pump, indicated in the manual. Once you have completed the connection to the PC, various video pages enable you to fully program the circulator, the digital inputs, the relays etc. and also to display the instant operating parameters, the power consumption and the errors.

c) Remote control via Modbus

Some models include an RS-485 connection for communication via **Modbus RTU** protocol.

d) Digital inputs and output relays

Some models are equipped with digital inputs and output relays for:

- Switch-on and remote regulation
- Tandem operation (twin)
- Stand-by signals, operation, errors etc.

The content of this publication should not be considered mandatory. EBARA Pumps Europe S.p.A. reserves the right to change the content without prior notice.

HIGH PERFORMANCE ELECTRONIC CIRCULATORS

in cast iron with cataphoresis coating

ENERGY LABEL

All *Ego* models comply with European Directive ErP 2009/125/CE.
With regard to wet-rotor circulators, **the reference parameter is the EEI index (Energy Efficiency Index)**, that identifies the total performance of the pump on a decreasing gradient (or, to the lowest EEI values corresponds a better pump performance).

The due dates provided by the Directive are the following:

- **1st step:** starting from **01/01/2013** are allowed only circulators with **EEI ≤ 0,27** (except circulators integrated and for sanitary water)
- **2nd step:** starting from **01/08/2015** are allowed only circulators with **EEI ≤ 0.23** (except circulators for sanitary water)
- **3rd step:** starting from **01/01/2020** also the circulators on substitution of circulators integrated will have to be **EEI ≤ 0,23** (except circulators for sanitary water)

The technical data sheets of the products indicate the EEI index for every model (value also specified on product nameplate in compliance with specific regulations).

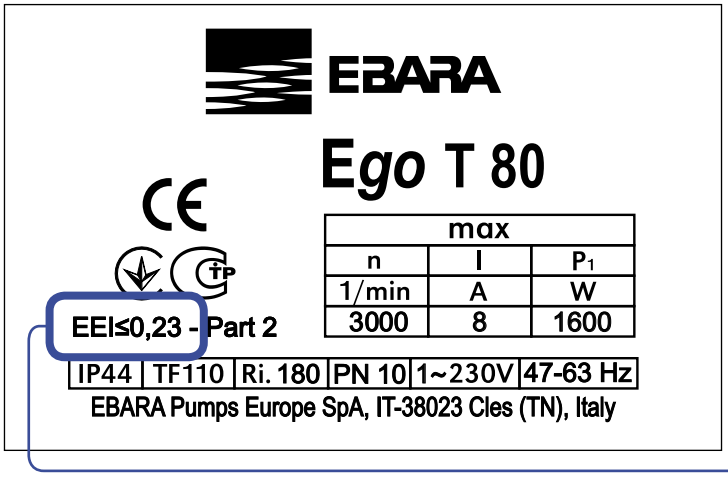

EXAMPLE OF NAMEPLATE WITH EEI INDEX

The content of this publication should not be considered mandatory. EBARA Pumps Europe S.p.A. reserves the right to change the content without prior notice.

HIGH PERFORMANCE ELECTRONIC CIRCULATORS

in cast iron with cataphoresis coating

CONTROL MODE

Below are described all control modes available within the *Ego* range. Depending on the model, control modes may be available entirely or partly. Therefore, please refer to the data sheets of every model to check the available control modes.

a) AUTO (factory setting, where provided)

In this mode **the pump automatically adjusts hydraulic performance** according to the actual requirements of the system, measuring the optimal H/Q point permanently. The AUTO mode is a form of proportional pressure regulation in which the curves have a fixed origin (H_{min}); the circulator will work according to system requirements in any point of the area highlighted in the figure, where both H_{min} and H_{max1} as well as H_{max2} are factory settings. **This operating mode is suitable for most applications and ensures high energy savings.**

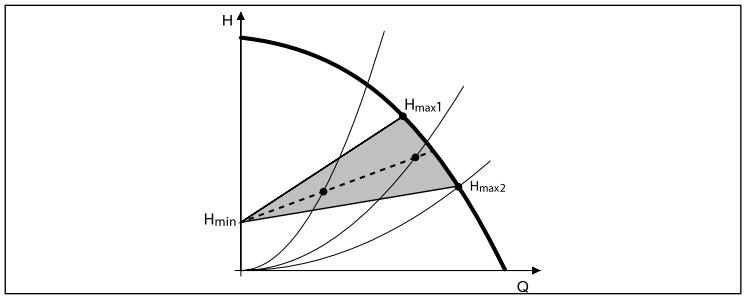

b) Proportional pressure (Δp-v)

In this mode, the pump automatically adjusts the pressure depending on the flow rate requested by the system, varying it linearly from a minimum to a maximum value. In practice: **when the flow rate requested increases, the differential pressure** generated by the pump is increased as well, and vice versa. This adjustment is **recommended for systems with high pressure drops.** For smaller models, the work curves (H_{min}-H_{max}) are preset, while for greater models they can be set within a wide range.

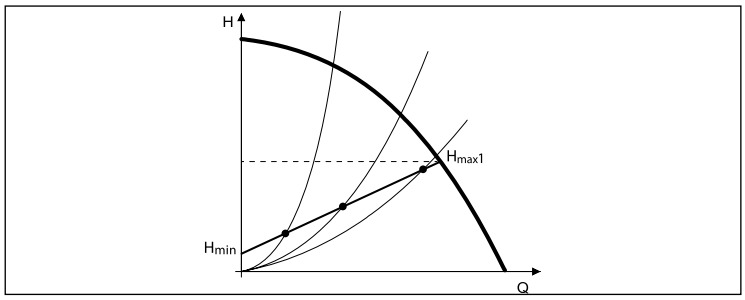

c) Constant pressure (ΔP-c)

In this mode **the pump head is maintained constant** (equal to the value set by the user) **regardless of the flow rate.** This mode, **recommended in systems with reduced pressure drops,** is available starting from medium sizes and enables selecting the desired pressure H_{set} (in metres) within a wide range.

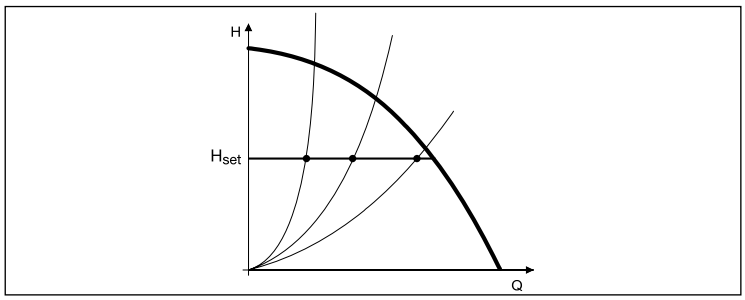

d) Constant speed

In this mode **the pump works according to a steay curve** like a common pump without regulation.
You can set various speeds or different constant work curves. In smaller models, the available curves are preset, while in greater models they can be set within a wide range (by setting the desired rotation speed in *rpm*).

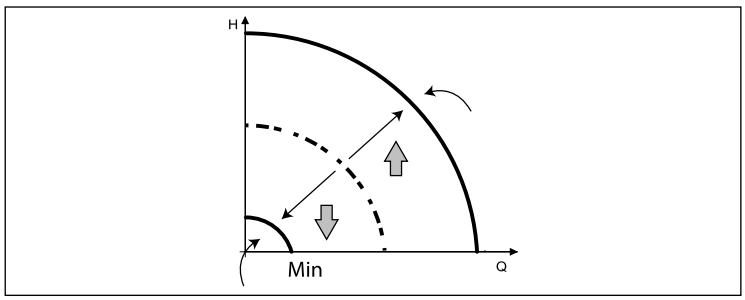

The content of this publication should not be considered mandatory. EBARA Pumps Europe S.p.A. reserves the right to change the content without prior notice.

Ego Range

HIGH PERFORMANCE ELECTRONIC CIRCULATORS

in cast iron with cataphoresis coating

PERFORMANCE RANGE

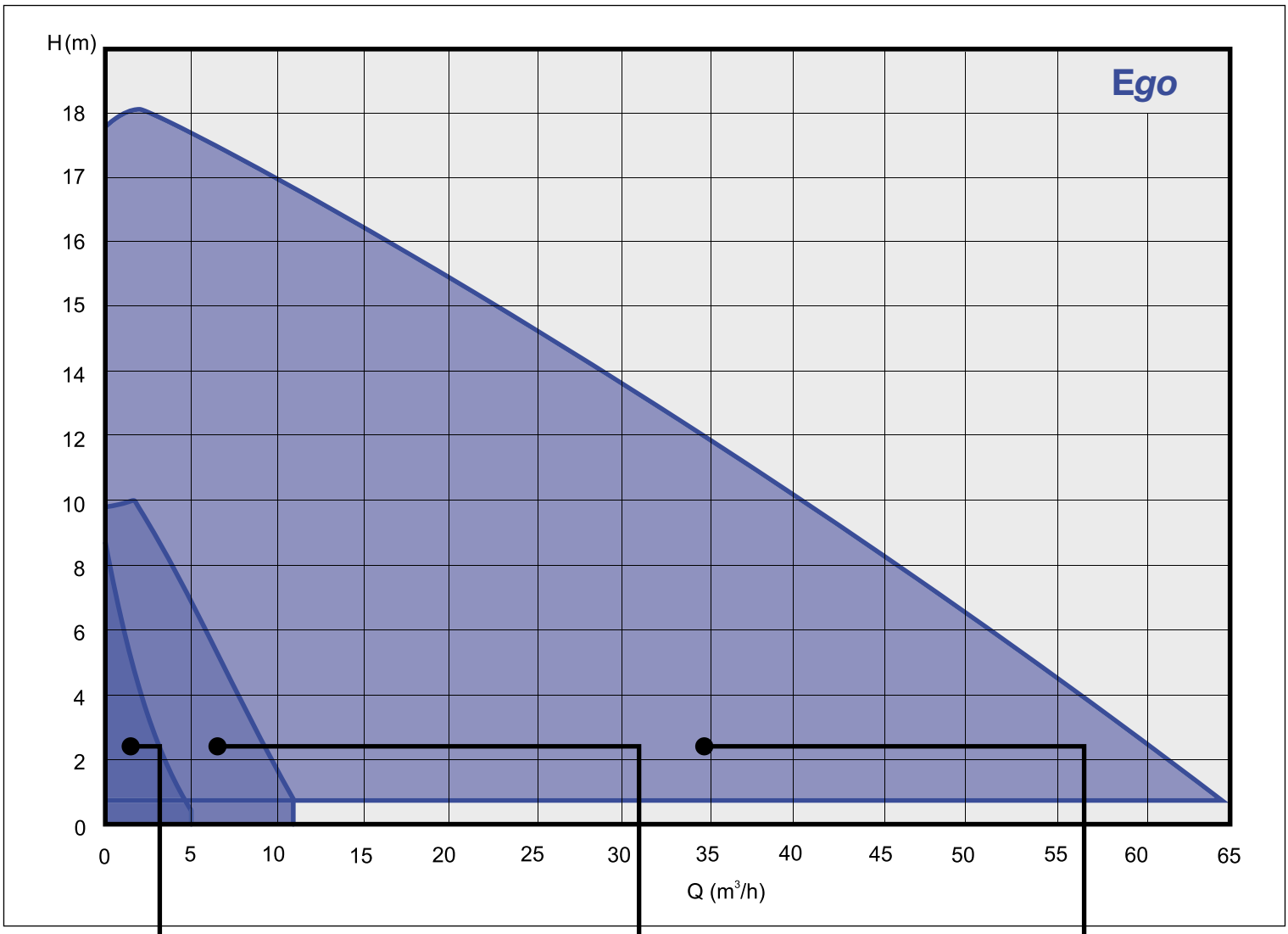

THREADED CIRCULATORS
Ego (T) (ER) -/40, -/60, -/80

THREADED/FLANGED CIRCULATORS
Ego easy (T) (C) -60, -80, -100

FLANGED CIRCULATORS
Ego (T) (C) 50, 65, 80, 100
Ego (T) (C) slim 40, 50

The content of this publication should not be considered mandatory. EBARA Pumps Europe S.p.A. reserves the right to change the content without prior notice.

Ego

THREADED CIRCULATORS

Ego (T) (ER) -/40, -/60, -/80, single and twin

High performance wet-rotor circulation pump with threaded connection, motor with permanent magnets and built-in electronic controller.

APPLICATIONS

Residential heating and air-conditioning systems.

FEATURES

- Minimum power consumption only 5W
- Built-in frequency converter
- Two operating modes ("ΔP-v" and "constant speed")
- Automatic venting function
- High input torque (with consequent automatic release of the rotor)
- Easy installation and adjustment by means of a single LED button
- 0-10V contact (optional, see versions "ER")

PUMP TECHNICAL DATA

- Liquid temperature: -10 to ÷110 °C
- Room temperature: 0 ÷ +40 °C
- Relative air humidity: ≤ 95%
- Allowed fluids: clean, not aggressive and not flammable, free of solid particles or fibres
- Maximum pressure: 10 bar
- Minimum suction pressure:
  - 0,05 bar a 50 °C
  - 0,4 bar a 80 °C
  - 1,1 bar a 110 °C
- Maximum amount of glycol: 20%*
- Threaded inlets: G1 - 1"½ - 2" (in accordance with ISO 228)
- Protection degree: IP44

MOTOR TECHNICAL DATA

- Type: synchronous with permanent magnets
- Motor speed: variable
- Supply voltage: 1~230V
- Frequency: 50/60 Hz
- Insulation class: F

** For greater amounts please check the final viscosity and the conditions of use*

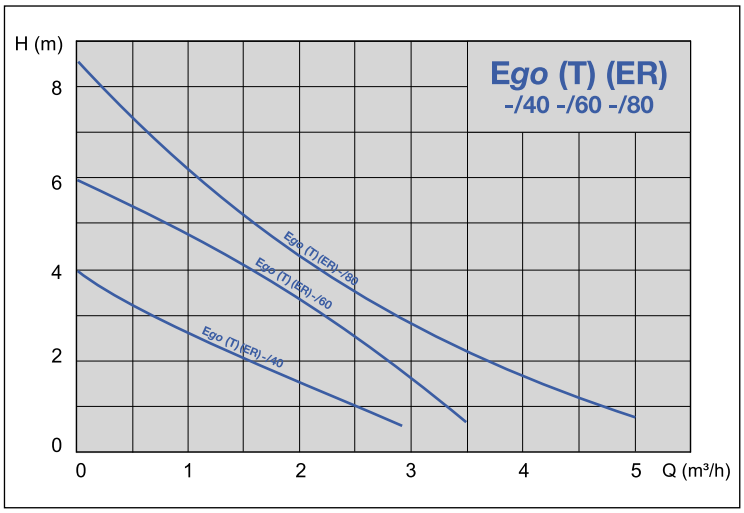

IDENTIFICATION CODE

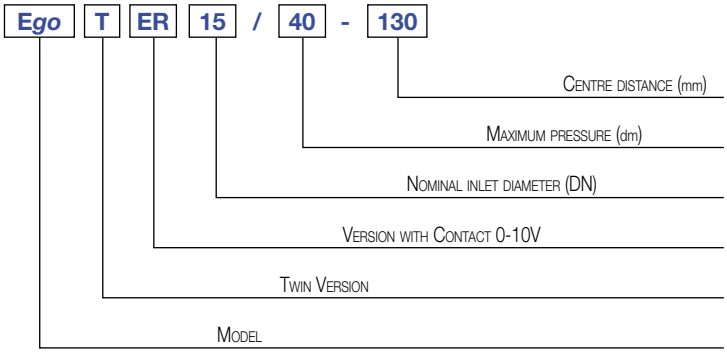

The content of this publication should not be considered mandatory. EBARA Pumps Europe S.p.A. reserves the right to change the content without prior notice.

OPERATING MODES

Two operating modes that can be selected using the LED button located on terminal box:

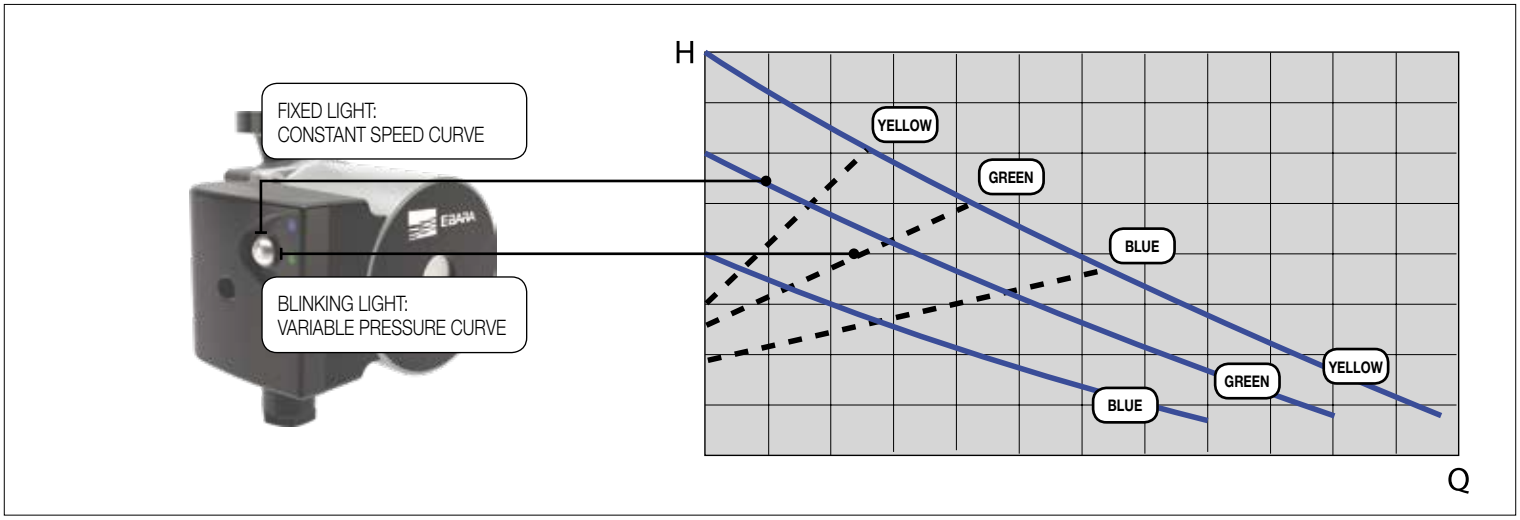

- **ΔP-v Proportional pressure (factory setting)**
  The circulators of this range can work in variable pressure **mode on 3 preset curves.** When this operating mode is enabled **the LED button blinks,** with a frequency that varies according to instant flow rate. **The colour of the LED identifies the selected curve** ("blue" indicates the lowest curve, "green" the intermediate curve, while "yellow" indicates the highest curve); to switch from one curve to another just press the button briefly.

From variable pressure modes (LED blinking) you can switch to constant speed mode (LED light steadily lit) keeping the LED button pressed for at least 5 seconds.

- **Constant speed**
  The circulators of this range can work at constant speed **on 3 preset curves.** In this case, the pump works as a usual pump without regulation and the power consumption remains constant. When this mode is active **the LED remains steadily lit;** in this case the colour of the LED **indicates the selected curve** ("blue" the lowest curve, "green" the intermediate curve, and "yellow" the highest curve). To switch from one curve to another, briefly press the button to return to variable pressure mode, select the desired curve (indicated by the colour of the LED) and then press and hold down the button.

VERSIONS WITH ANALOG REGULATION 0-10V (mod. *Ego* ER -/40, -/60, -/80)

The special versions ***Ego* ER**, equipped with 0-10V contact inside the terminal box, enable setting the desired work curve remotely (both the fixed speed and the variable differential pressure). In this case, as shown in the diagrams below, the work curves are more numerous.

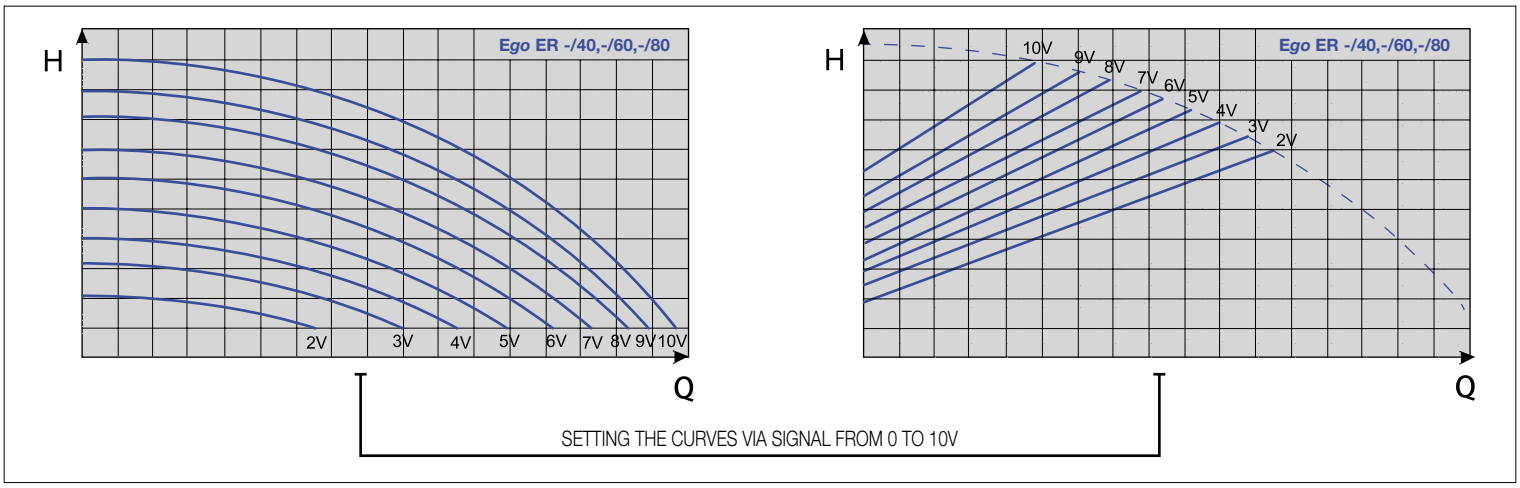

The content of this publication should not be considered mandatory. EBARA Pumps Europe S.p.A. reserves the right to change the content without prior notice.

THREADED CIRCULATORS

Ego (T) (ER) -/40, -/60, -/80, single and twin

PERFORMANCE CURVES

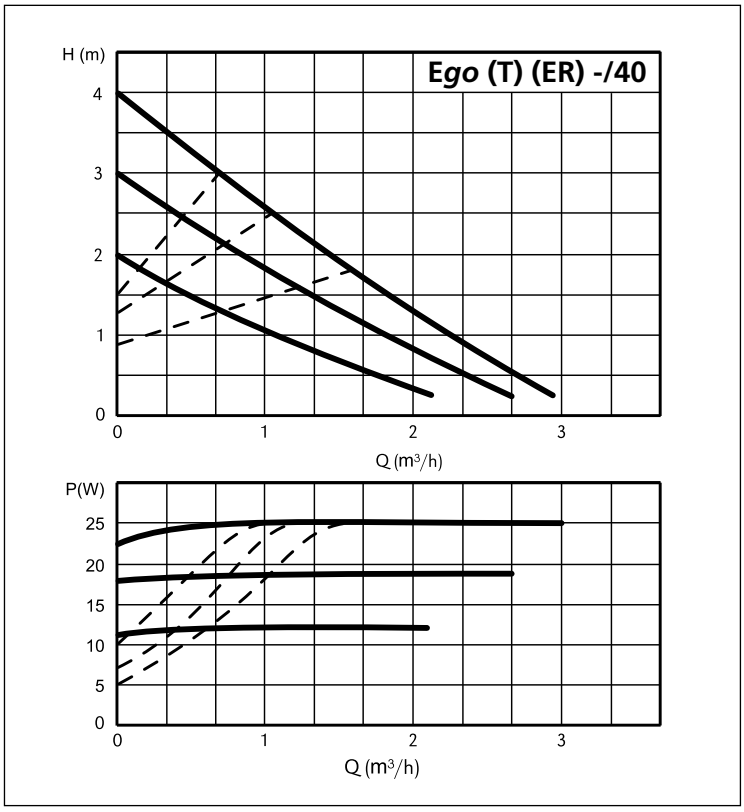

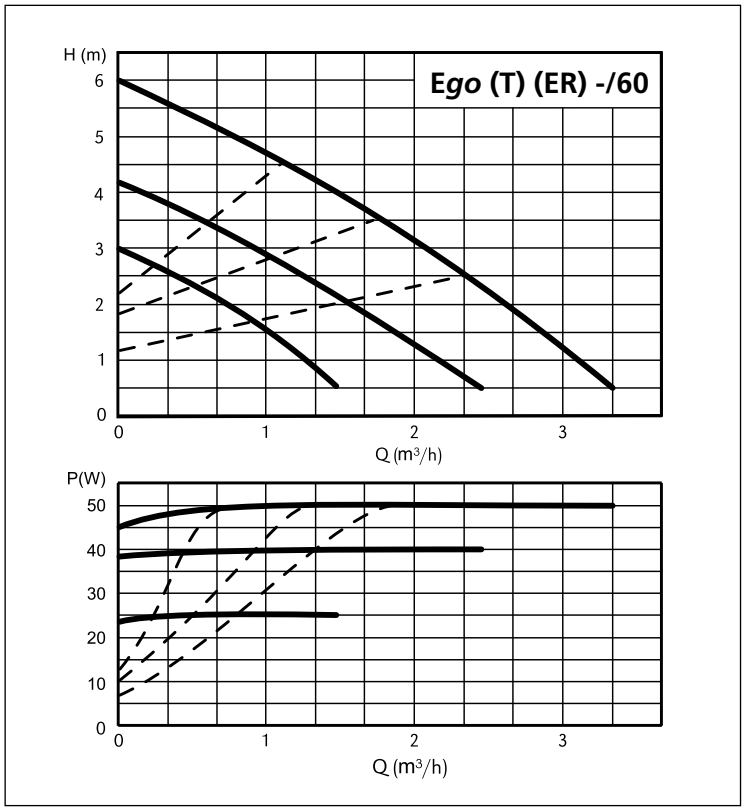

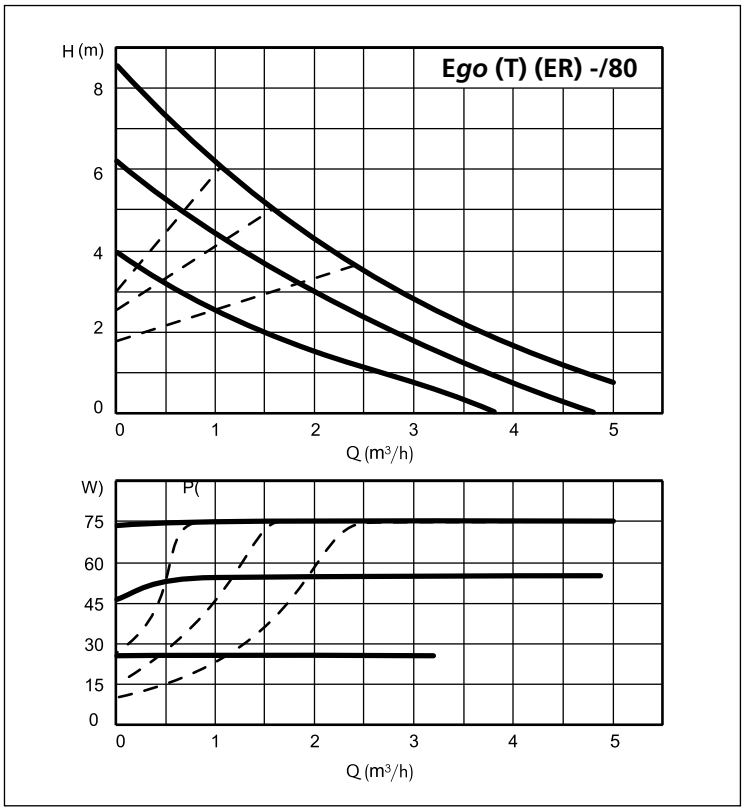

The content of this publication should not be considered mandatory. EBARA Pumps Europe S.p.A. reserves the right to change the content without prior notice.

Ego

THREADED CIRCULATORS

Ego (T) (ER) -/40, -/60, -/80, single and twin

SECTIONAL VIEW

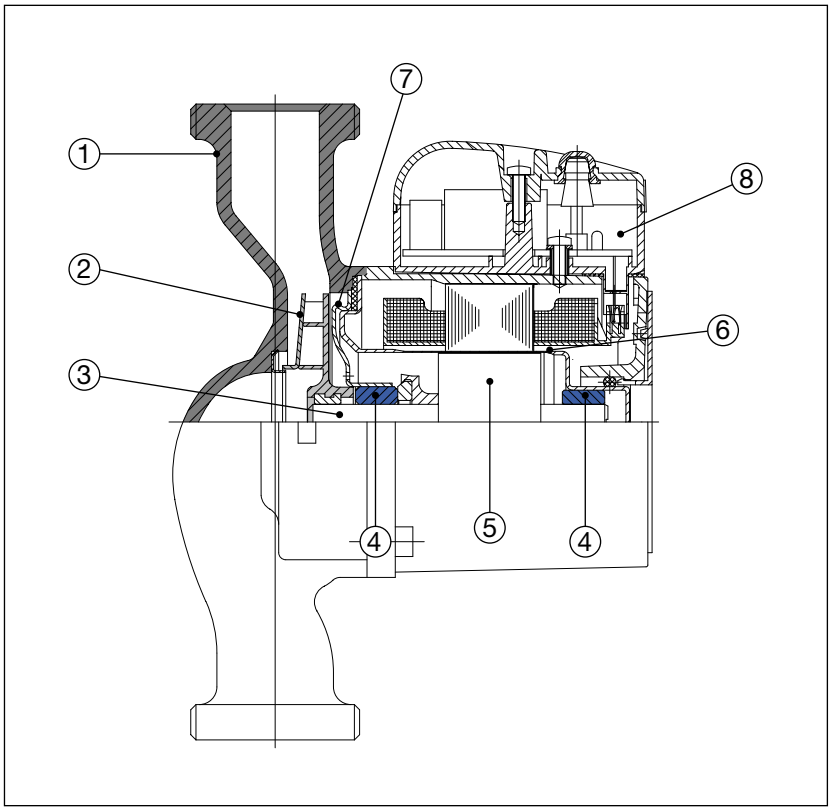

TABLE OF MATERIALS

Ref.	Part	Material
1	Pump body	Cast iron with cataphoresis coating
2	Impeller	Technopolymer
3	Shaft	Ceramic
4	Bearings	Ceramic
5	Rotor	Coated in stainless steel
6	Rotor can	AISI 316 Stainless Steel
7	Bearing plate	AISI 316 Stainless Steel
8	Electronic board	-

TECHNICAL FEATURES - single

Model	EEI (energy efficiency index)	Pipe connection	Inlet fitting	Power P_1 [W] P_{max}	Current consumption [A] I_{min} - I_{max}	Weight [kg]
Ego (ER) 15/40-130	≤ 0,15	G1	Rp ½	25	0,05 ÷ 0,2	1,9
Ego (ER) 25/40-130	≤ 0,15	G1½	Rp 1”	25	0,05 ÷ 0,2	2,1
Ego (ER) 15/60-130	≤ 0,17	G1	Rp ½	50	0,05 ÷ 0,4	1,9
Ego (ER) 25/60-130	≤ 0,17	G1½	Rp 1”	50	0,05 ÷ 0,4	2,1
Ego (ER) 25/80-130	≤ 0,19	G1½	Rp 1”	75	0,05 ÷ 0,6	2,1
Ego (ER) 25/40-180	≤ 0,15	G1½	Rp 1”	25	0,05 ÷ 0,2	2,4
Ego (ER) 32/40-180	≤ 0,15	G2	Rp 1”¼	25	0,05 ÷ 0,2	2,5
Ego (ER) 25/60-180	≤ 0,17	G1½	Rp 1”	50	0,05 ÷ 0,4	2,4
Ego (ER) 32/60-180	≤ 0,17	G2	Rp 1”¼	50	0,05 ÷ 0,4	2,5
Ego (ER) 25/80-180	≤ 0,19	G1½	Rp 1”	75	0,05 ÷ 0,6	2,4
Ego (ER) 32/80-180	≤ 0,19	G2	Rp 1”¼	75	0,05 ÷ 0,6	2,5

TECHNICAL FEATURES - twin

Model	EEI (energy efficiency index)	Pipe connection	Inlet fitting	Power P_1 [W] P_{max}	Current consumption [A] I_{min} - I_{max}	Weight [kg]
Ego T 25/60-180	≤ 0,17	G1½	Rp 1"	50	0,05 ÷ 0,4	5,5
Ego T 32/60-180	≤ 0,17	G2	Rp 1"¼	50	0,05 ÷ 0,4	5,5
Ego T 25/80-180	≤ 0,19	G1½	Rp 1"	75	0,05 ÷ 0,6	5,7
Ego T 32/80-180	≤ 0,19	G2	Rp 1"¼	75	0,05 ÷ 0,6	5,7

The content of this publication should not be considered mandatory. EBARA Pumps Europe S.p.A. reserves the right to change the content without prior notice.

Ego

THREADED CIRCULATORS

Ego -/40, -/60, -/80

DIMENSIONS - single

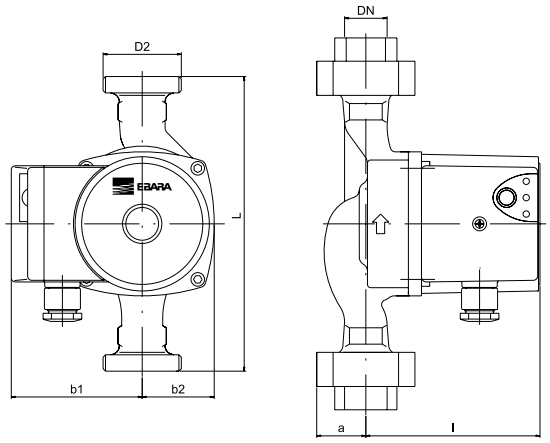

TABLE OF DIMENSIONS - single

Model	Dimensions [mm]						
	L	DN	b1	b2	l	a	D2
Ego (ER) 15/40-130	130	15	80	48	108	27	1"
Ego (ER) 25/40-130	130	25	80	48	108	32	1"½
Ego (ER) 15/60-130	130	15	80	48	108	27	1"
Ego (ER) 25/60-130	130	25	80	48	108	32	1"½
Ego (ER) 25/80-130	130	25	80	48	108	32	1"½
Ego (ER) 25/40-180	180	25	80	48	108	32	1"½
Ego (ER) 32/40-180	180	32	80	48	108	40	2"
Ego (ER) 25/60-180	180	25	80	48	108	32	1"½
Ego (ER) 32/60-180	180	32	80	48	108	40	2"
Ego (ER) 25/80-180	180	25	80	48	108	32	1"½
Ego (ER) 32/80-180	180	32	80	48	108	40	2"

DIMENSIONS - twin

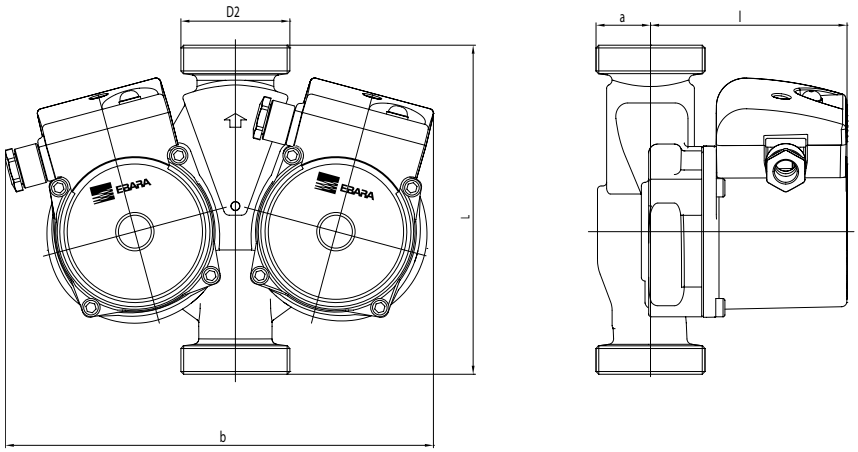

TABLE OF DIMENSIONS - twin

Modello	Dimensions [mm]					
	L	DN	b	l	a	D2
Ego T 25/80-180	180	25	234	107,2	29,8	1"½
Ego T 32/80-180	180	32	234	107,2	29,8	2"
Ego T 25/60-180	180	25	234	107,2	29,8	1"½
Ego T 32/60-180	180	32	234	107,2	29,8	2"

The content of this publication should not be considered mandatory. EBARA Pumps Europe S.p.A. reserves the right to change the content without prior notice.

THREADED CIRCULATORS

Ego -/40, -/60, -/80

ASSEMBLY POSITION

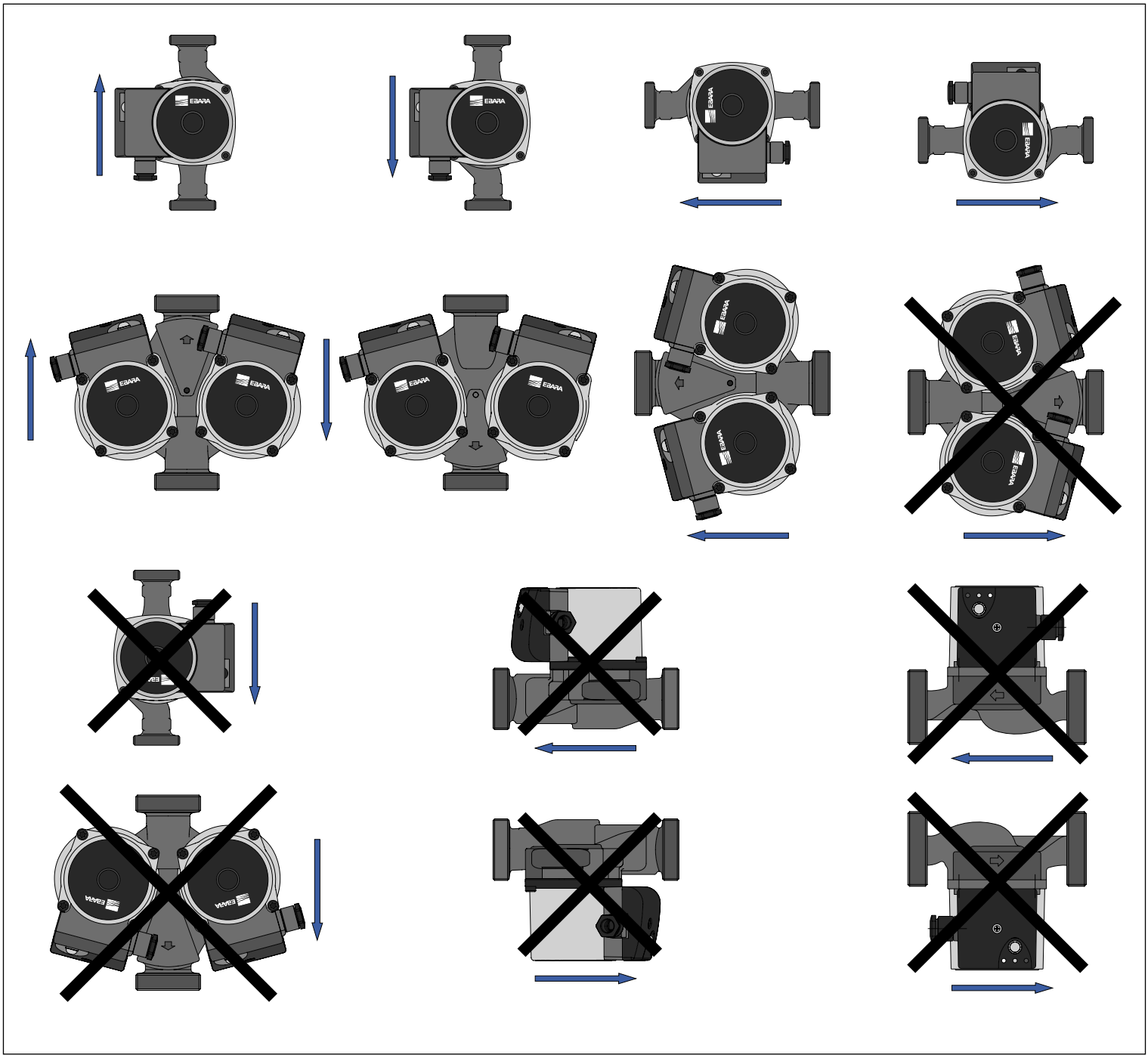

The content of this publication should not be considered mandatory. EBARA Pumps Europe S.p.A. reserves the right to change the content without prior notice.

Ego easy

THREADED/FLANGED CIRCULATORS

Ego (T) (C) easy -60, -80, -100, -120 single and twin

High performance wet rotor circulation pump with threaded or flanged connection, motor with permanent magnets and built-in electronic controller.

APPLICATION

Residential and industrial heating and air-conditioning systems.

FEATURES

- Built-in frequency converter
- Multiple operating modes
- Numeric and graphical display for easy setup and visualisation of parameters
- Automatic venting function
- Built-in overload safety device
- High input torque (with consequent automatic release of the rotor)
- Optional communication module (with Ethernet port, 0-10V contact, digital inputs etc.)

PUMP TECHNICAL DATA

- Liquid temperature: -10 ÷ +110 °C
- Room temperature: 0 ÷ +40 °C
- Relative air humidity: ≤ 95%
- Allowed fluids: clean, not aggressive and not flammable, free of solid particles or fibres
- Maximum pressure: 10 bar
- Minimum suction pressure:
  - 0,05 bar a 50 °C
  - 0,8 bar a 80 °C
  - 1,4 bar a 110 °C
- Maximum amount of glycol: 20%*
- Threaded inlets: G1½" – 2" (in accordance with ISO 228)
- Flanged inlets: from DN 32 to DN 50
- Protection degree: IP44

MOTOR TECHNICAL DATA

- Type: synchronous with permanent magnets
- Motor speed: variable
- Supply voltage: 1~230V
- Frequency: 50/60 Hz
- Insulation class: F

** For greater amounts please check the final viscosity and the conditions of use*

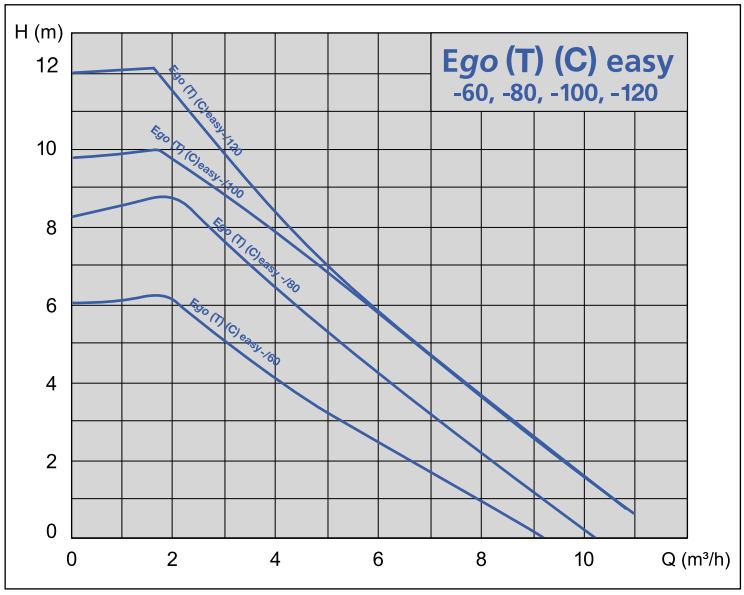

IDENTIFICATION CODE

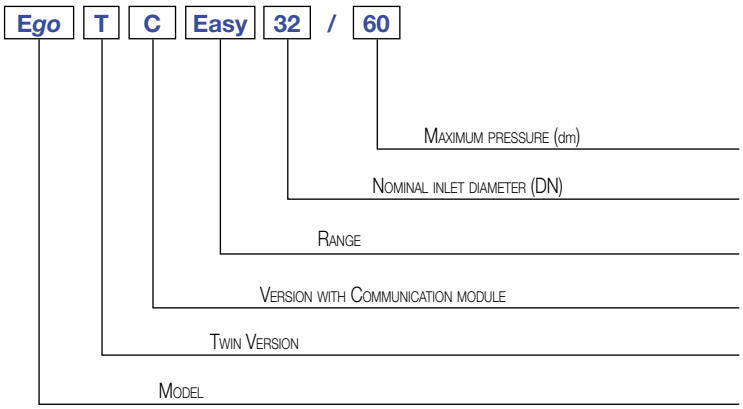

The content of this publication should not be considered mandatory, EBARA Pumps Europe S.p.A. reserves the right to change the content without prior notice.

Ego easy

THREADED/FLANGED CIRCULATORS

Ego (T) (C) easy -60, -80, -100, -120 single and twin

OPERATING MODES

The operating modes can be selected using the buttons located on the rear panel:

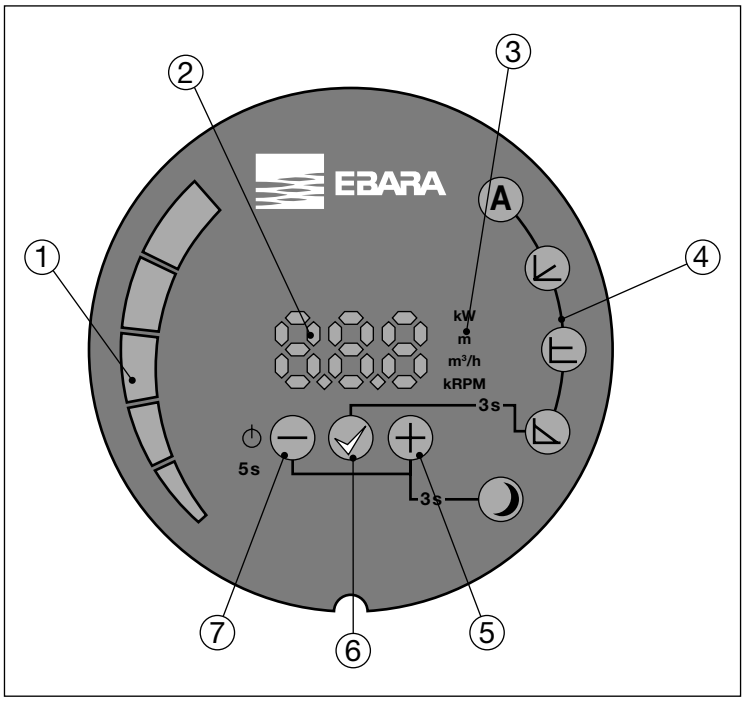

KEY

1 Segment display
2 Numeric display
3 Display of selected parameter
4 Display of selected mode
5 Selection key
6 Confirmation key
7 Selection key

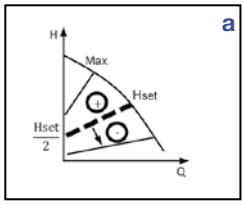

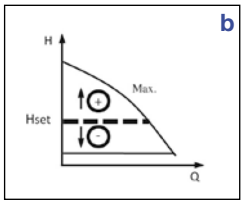

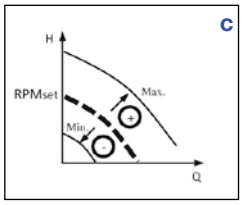

AUTO mode (factory setting)
The circulator automatically adjusts the hydraulic performance depending on the actual requirements of the system, continuously measuring the optimal H/Q point. This operating mode is suitable for most applications and ensures high energy savings.

Proportional pressure (ΔP-v) - fig. a
The circulator adjusts the pump head depending on the flow rate, varying the latter linearly from a maximum value (Hset) to a minimum value (equal to $H_{set}/2$). The pressure value (Hset) is set via buttons ⊕ and ⊖ and is expressed in metres; the minimum value is automatically calculated by the circulator.

Constant pressure (ΔP-c) - fig. b
The circulators maintains the pump head constant when the flow rates varies. The value of the pressure (H_{set}) is set via buttons ⊕ and ⊖ and is expressed in metres.

Constant speed - fig. c
The circulators operates according to a constant curve set via buttons ⊕ and ⊖ (by selecting the rotation speed in "rpm").

Night mode
Night mode can be activated in combination with any of the operating modes listed above, and allows the circulator to operate at a minimum curve (therefore with very low consumption) when it detects a decrease in liquid temperature of 15-20 ° C. When temperature rises, it automatically returns to normal operating curve (according to the selected mode).

The content of this publication should not be considered mandatory. EBARA Pumps Europe S.p.A. reserves the right to change the content without prior notice.

THREADED/FLANGED CIRCULATORS

Ego (T) (C) easy -60, -80, -100, -120 single and twin

COMMUNICATION MODULE

Versions ***Ego* T C easy** are equipped with an additional communication module which can be accessed by opening the rear display panel. The communication module is also available as an optional accessory. It is compatible with all standard models *Ego* easy.
The module enables running a wide range of applications remotely:

- **Access via Ethernet**
- **Remote On/Off**
- **Analog control 0-10V**
- **Modbus RTU**
- **Alarm/state relay**

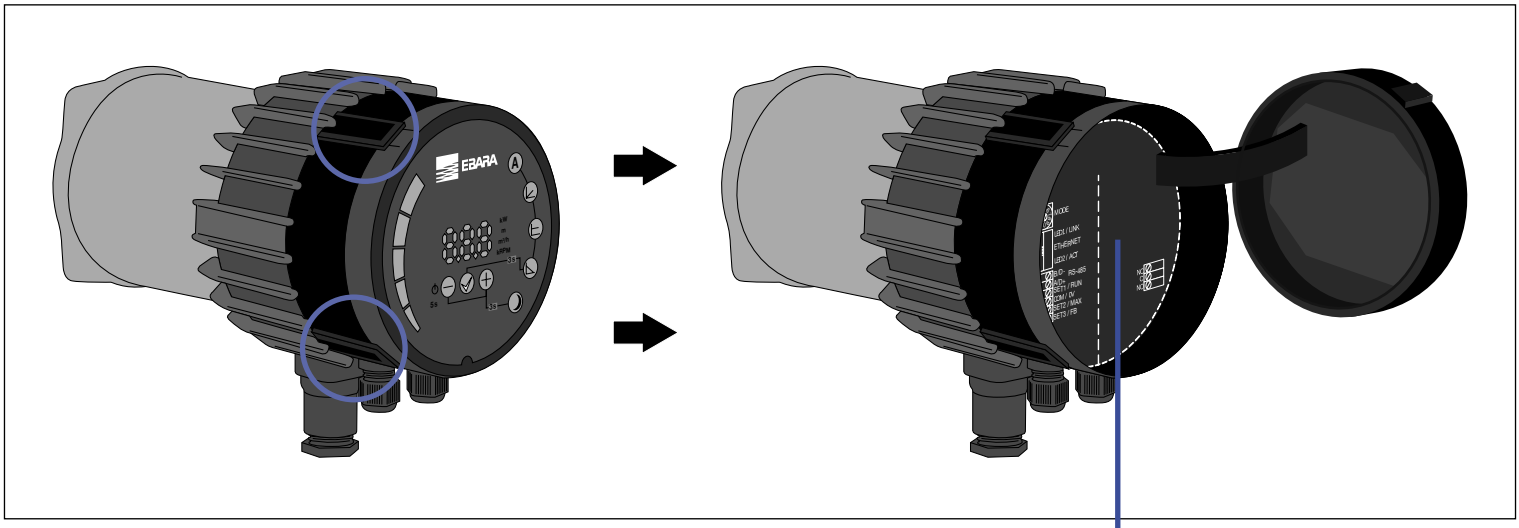

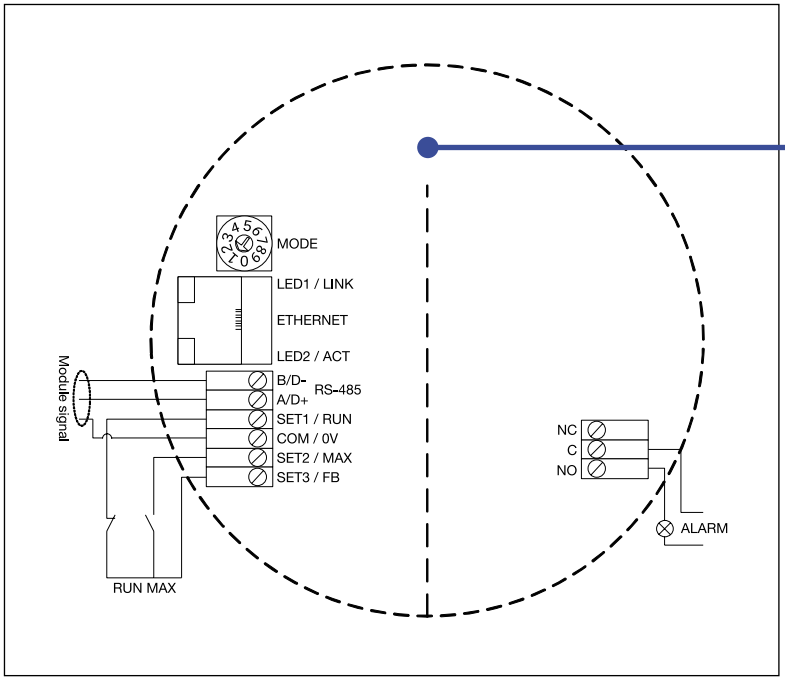

The content of this publication should not be considered mandatory, EBARA Pumps Europe S.p.A. reserves the right to change the content without prior notice.

Ego easy

THREADED/FLANGED CIRCULATORS

Ego (T) (C) easy -60, -80, -100, -120 single and twin

PERFORMANCE CURVES

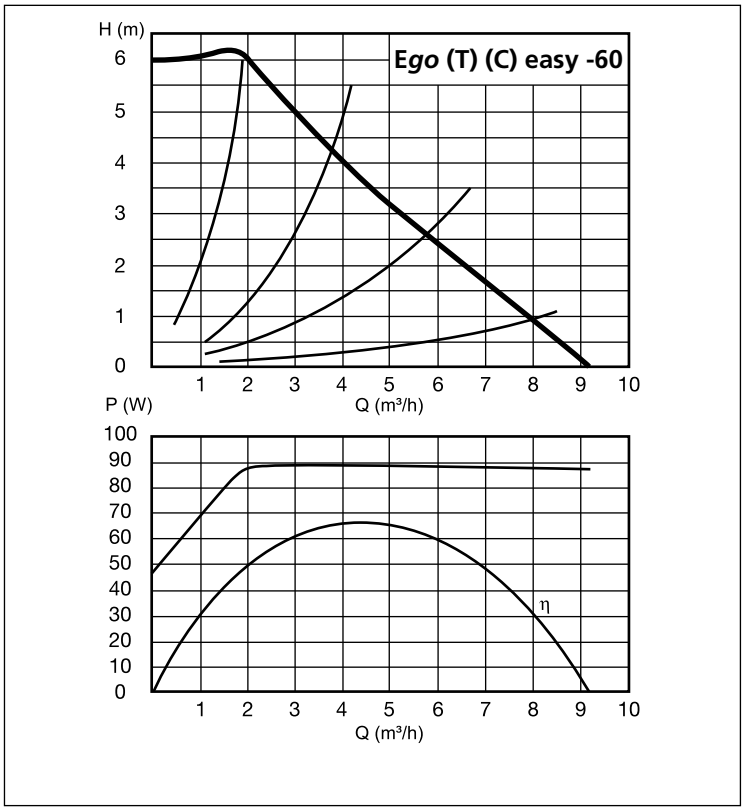

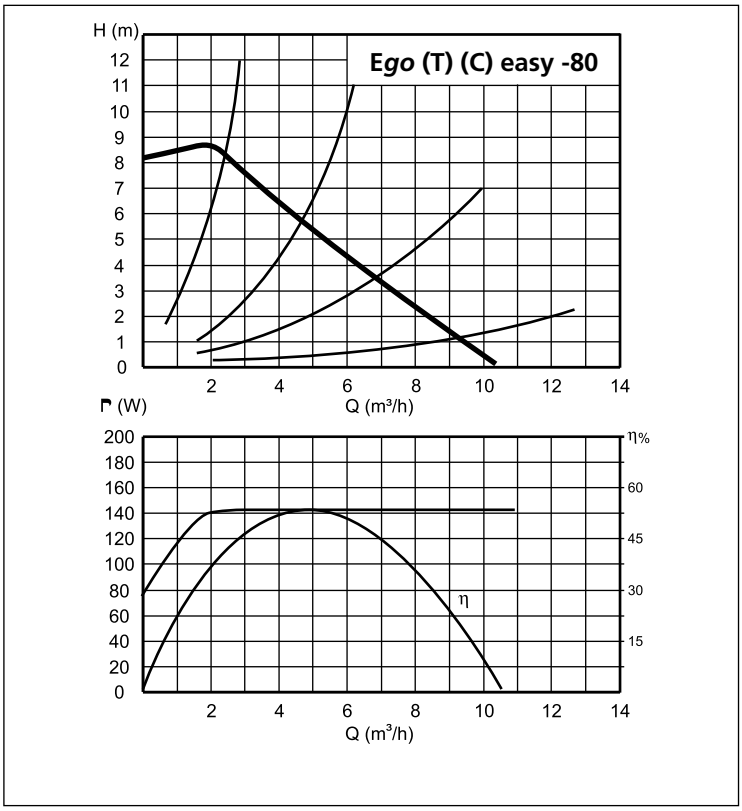

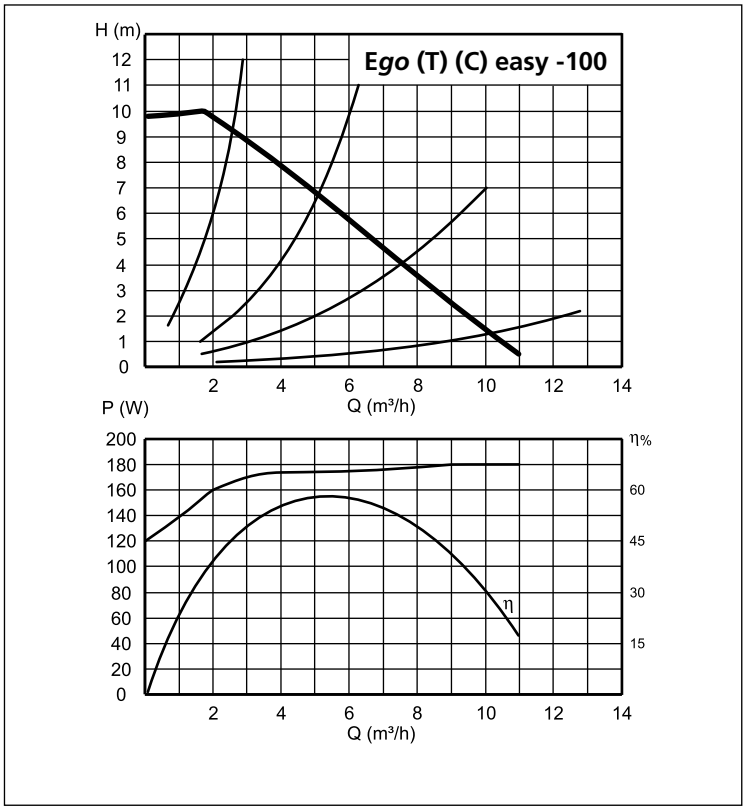

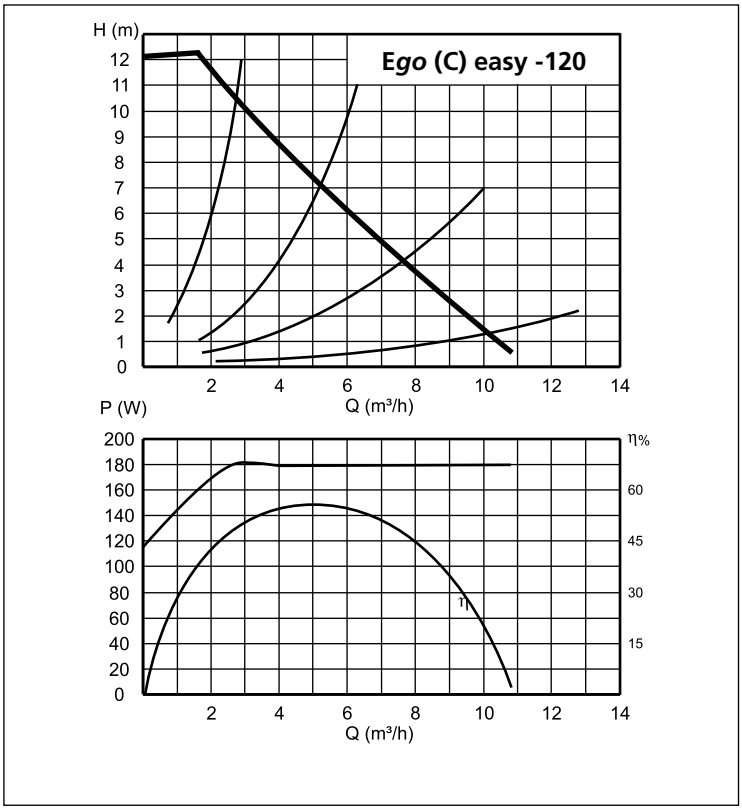

The content of this publication should not be considered mandatory. EBARA Pumps Europe S.p.A. reserves the right to change the content without prior notice.

Ego easy

THREADED/FLANGED CIRCULATORS

Ego (T) (C) easy -60, -80, -100, -120 single and twin

SECTIONAL VIEW

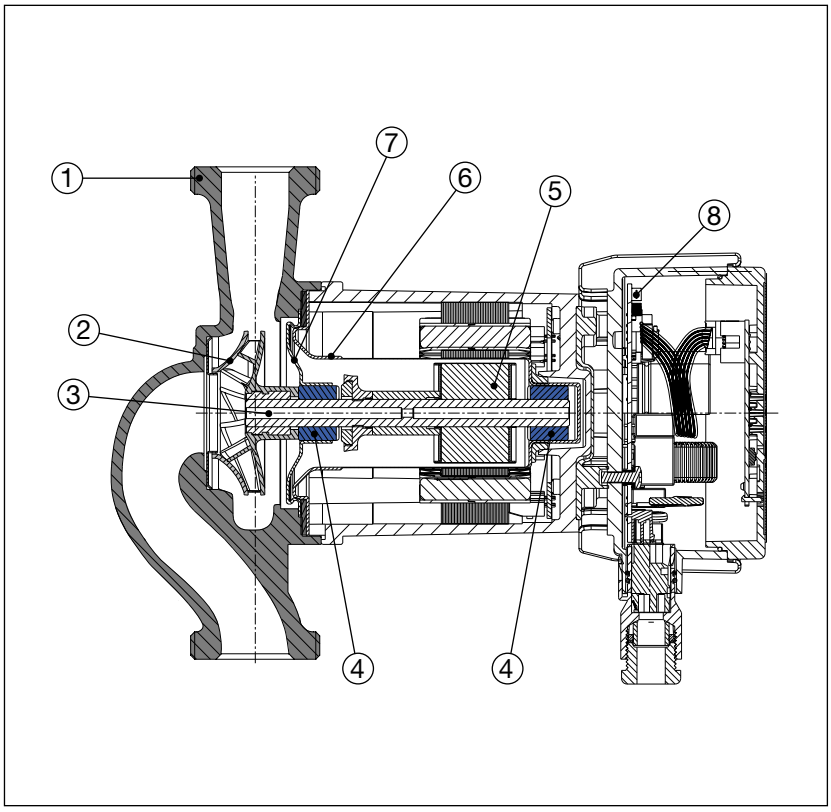

TABLE OF MATERIALS

Ref.	Part	Material
1	Pump body	Cast iron with cataphoresis coating
2	Impeller	Technopolymer
3	Shaft	Stainless steel
4	Bearings	Graphite
5	Rotor	Coated in stainless steel
6	Rotor can	AISI 316 Stainless Steel
7	Bearing plate	AISI 316 Stainless Steel
8	Electronic board	-

TECHNICAL FEATURES - single

Model	EEI (energy efficiency index)	Pipe connection	Inlet fitting	Power P_1 [W] P_{max}	Current consumption [A] I_{min} - I_{max}	Weight [kg]
Ego easy 25-60	≤ 0,21	G1"½	Rp 1"	90	0,1 ÷ 0,75	4,0
Ego easy 32-60	≤ 0,21	G2"	Rp 1"¼	90	0,1 ÷ 0,75	4,1
Ego easy 25-80	≤ 0,21	G1"½	Rp 1"	140	0,1 ÷ 1,15	4,0
Ego easy 32-80	≤ 0,21	G2"	Rp 1"¼	140	0,1 ÷ 1,15	4,1
Ego easy 25-100	≤ 0,21	G1"½	Rp 1"	180	0,1 ÷ 1,5	4,0
Ego easy 32-100	≤ 0,21	G2"	Rp 1"¼	180	0,1 ÷ 1,5	4,1
Ego easy 25-120	≤ 0,22	G1"½	Rp 1"½	180	0,1 ÷ 1,5	4,0
Ego easy 32-120	≤ 0,22	G2"	Rp 2"	180	0,1 ÷ 1,5	4,1
Ego easy 40-60F	≤ 0,21	DN 40	-	180	0,1 ÷ 0,75	8,7
Ego easy 32-100F	≤ 0,21	DN 32	-	180	0,1 ÷ 1,5	7,4
Ego easy 40-100F	≤ 0,21	DN 40	-	180	0,1 ÷ 1,5	8,5
Ego easy 50-100F	≤ 0,21	DN 50	-	180	0,1 ÷ 1,5	9,8

TECHNICAL FEATURES - twin

Model	EEI (energy efficiency index)	Pipe connection	Inlet fitting	Power P_1 [W] P_{max}	Current consumption [A] I_{min} - I_{max}	Weight [kg]
Ego T C easy 32-60	≤ 0,21	G2"	Rp 1"¼	90	0,1 ÷ 0,75	8,2
Ego T C easy 32-80	≤ 0,21	G2"	Rp 1"¼	140	0,1 ÷ 1,15	8,2
Ego T C easy 32-100	≤ 0,21	G2"	Rp 1"¼	180	0,1 ÷ 1,50	8,2
Ego T C easy 40-100F	≤ 0,21	DN 40	-	180	0,1 ÷ 1,50	11,0

The content of this publication should not be considered mandatory. EBARA Pumps Europe S.p.A. reserves the right to change the content without prior notice.

Ego easy

THREADED/FLANGED CIRCULATORS

Ego (T) (C) easy -60, -80, -100, -120 single and twin

DIMENSIONS - single

Fig. 1

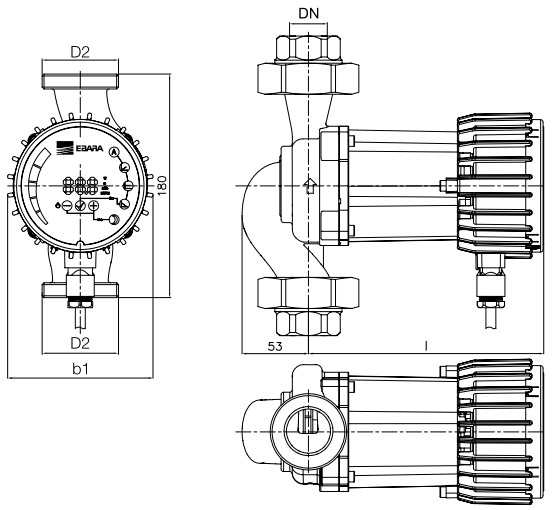

Fig. 2

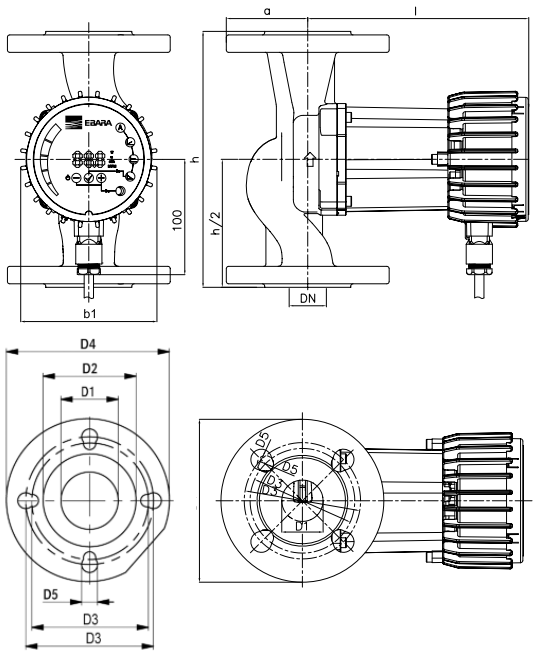

TABLE OF DIMENSIONS - single

Ref.	Model	Dimensions [mm]										
		h	DN	b1	l	a	D1	D2	D3	D4	D5	n. of holes
Fig. 1	*Ego* easy 25-60	180	25	117	190 (222)*	-	-	1"½	-	-	-	-
	Ego easy 32-60	180	32	117	190 (222)*	-	-	2"	-	-	-	-
	Ego easy 25-80	180	25	117	190 (222)*	-	-	1"½	-	-	-	-
	Ego easy 32-80	180	32	117	190 (222)*	-	-	2"	-	-	-	-
	Ego easy 25-100	180	25	117	190 (222)*	-	-	1"½	-	-	-	-
	Ego easy 32-100	180	32	117	190 (222)*	-	-	2"	-	-	-	-
	Ego easy 25-120	180	25	117	190 (222)*	-	-	1"½	-	-	-	-
	Ego easy 32-120	180	32	117	190 (222)*	-	-	2"	-	-	-	-
Fig. 2	*Ego* easy 40-60F	220	40	117	190 (222)*	75	40	80	100/110	150	14/19	4
	Ego easy 32-100F	220	32	117	190 (222)*	70	32	74	90/100	140	14/18	4
	Ego easy 40-100F	220	40	117	190 (222)*	75	40	80	100/110	150	14/19	4
	Ego easy 50-100F	240	50	117	190 (222)*	82,5	50	90	110/125	165	14/19	4

** Dimensions in bracket are referred to Ego easy with communication module*

The content of this publication should not be considered mandatory. EBARA Pumps Europe S.p.A. reserves the right to change the content without prior notice.

Ego easy

THREADED/FLANGED CIRCULATORS

Ego (T) (C) easy -60, -80, -100, -120 single and twin

DIMENSIONS - twin

Fig. 1

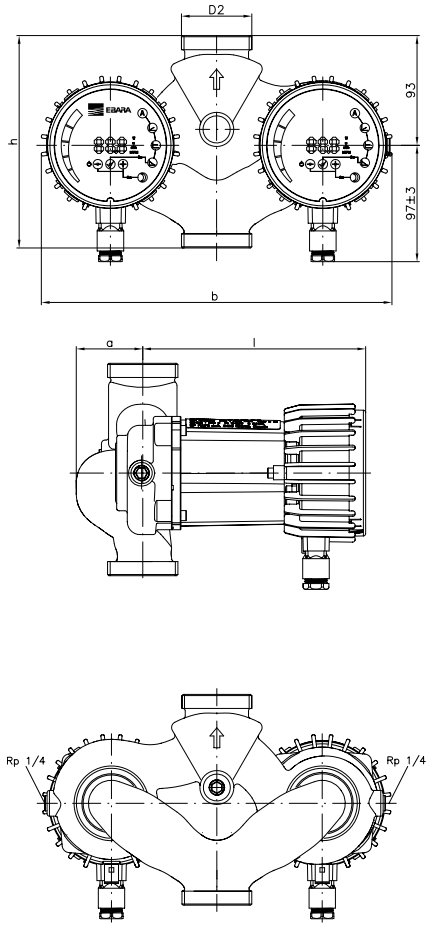

Fig. 2

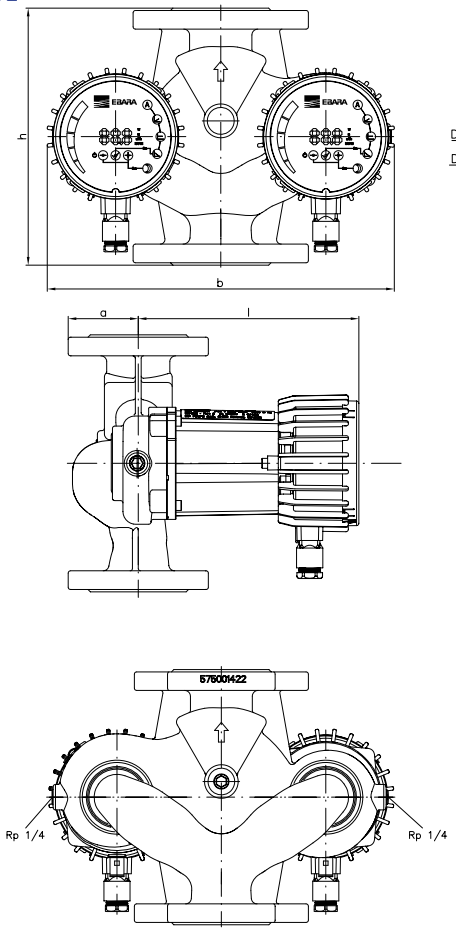

DIMENSIONS - twin

Ref.	Model	Dimensions [mm]										
		h	DN	b	l	a	D1	D2	D3	D4	D5	n. of holes
Fig. 1	*Ego* T C easy 32-60	180	32	297	222	56	-	2"	-	-	-	-
	Ego T C easy 32-80	180	32	297	222	56	-	2"	-	-	-	-
	Ego T C easy 32-100	180	32	297	222	56	-	2"	-	-	-	-
Fig. 2	*Ego* T C easy 40-100F	220	40	297	222	75	40	80	100/110	150	14/19	4

Communication module is standard for twin version

The content of this publication should not be considered mandatory. EBARA Pumps Europe S.p.A. reserves the right to change the content without prior notice.

THREADED/FLANGED CIRCULATORS

Ego (T) (C) easy -60, -80, -100, -120 single and twin

ASSEMBLY POSITION

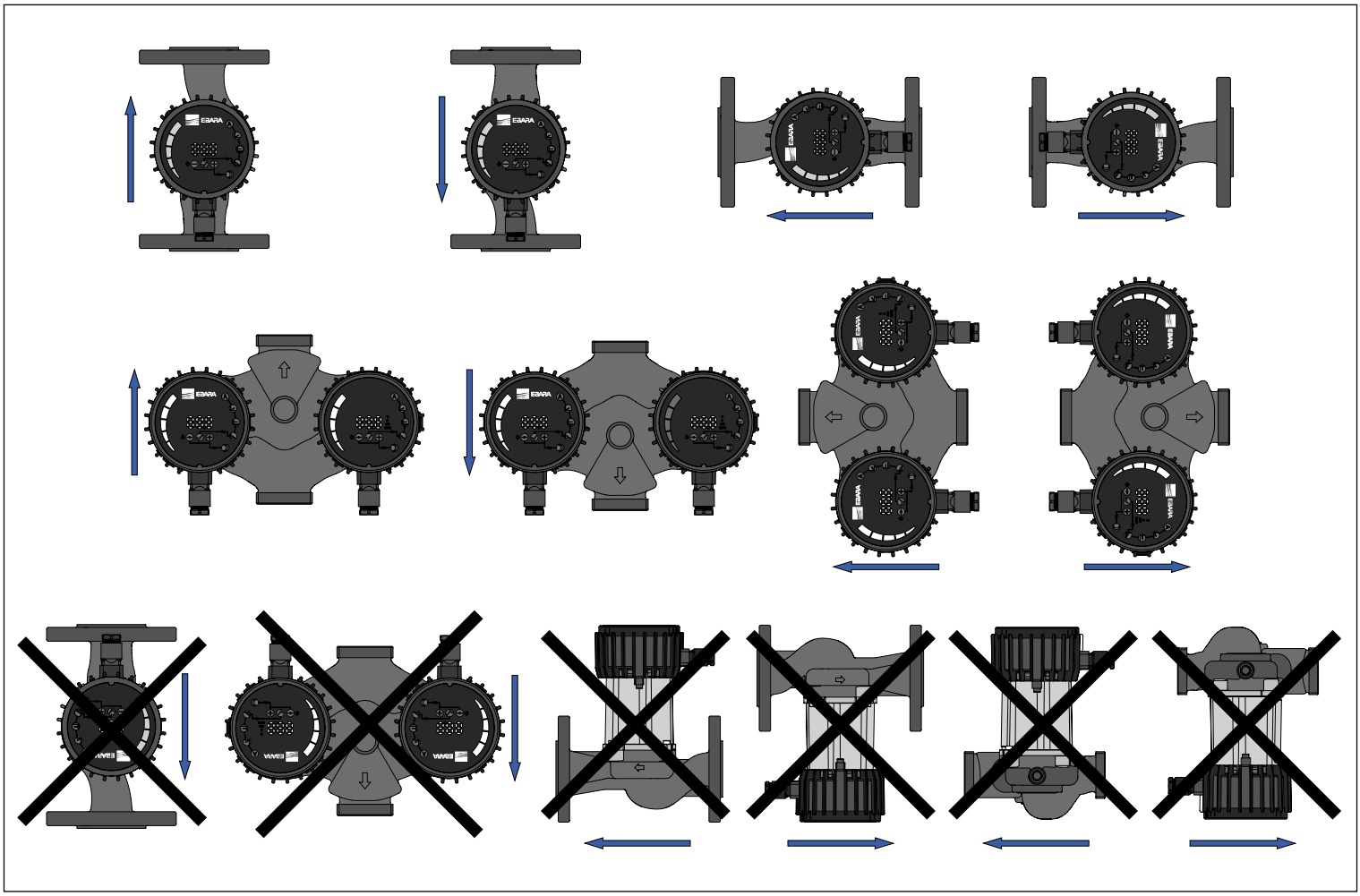

The content of this publication should not be considered mandatory. EBARA Pumps Europe S.p.A. reserves the right to change the content without prior notice.

Ego slim

FLANGED CIRCULATORS

Ego (T) (C) *slim* 40, 50, 65, 80

High performance wet rotor circulation pump with flanged connection, motor with permanent magnets and built-in electronic controller.

APPLICATIONS

Residential and industrial heating and air-conditioning systems.

FEATURES

- Built-in frequency converter
- Multiple operating modes
- Numeric and graphical display for easy setup and visualisation of parameters
- Automatic venting function
- Built-in overload safety device
- High input torque (with consequent automatic release of the rotor)
- Ethernet connection, digital inputs and relays included (standard)
- Optional version with built-in communication module (with Modbus, contact 0-10V etc.)

PUMP TECHNICAL DATA

- Liquid temperature: -10 ÷ +110 °C
- Room temperature: 0 ÷ +40 °C
- Relative air humidity: ≤ 95%
- Allowed fluids: clean, not aggressive and not flammable, free of solid particles or fibres
- Maximum pressure: 10 bar
- Minimum suction pressure:
  - 0,05 bar a 50 °C
  - 0,8 bar a 80 °C
  - 1,4 bar a 110 °C
- Maximum amount of glycol: 20%*
- Flanged inlets: DN 40, DN 50, DN 65, DN 80
- Protection degree: IP40

MOTOR TECHNICAL DATA

- Type: synchronous with permanent magnets
- Motor speed: variable
- Supply voltage: 1~230V
- Frequency: 50/60 Hz
- Insulation class: F

** For greater amounts please check the final viscosity and the conditions of use*

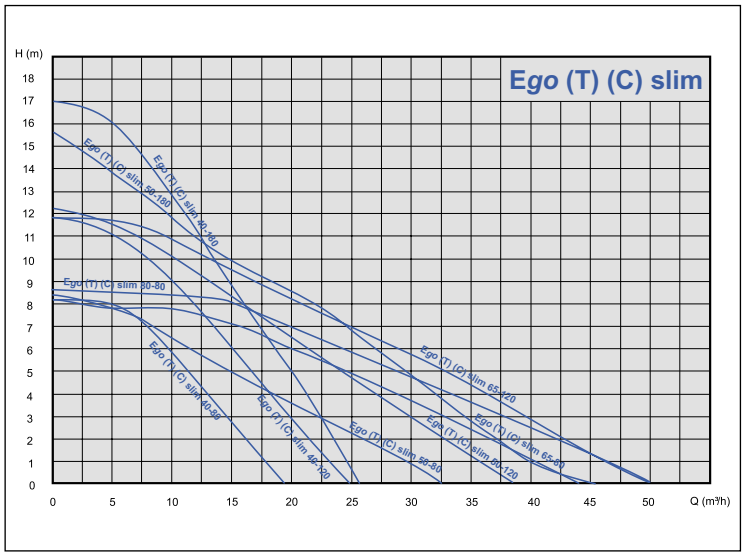

IDENTIFICATION CODE

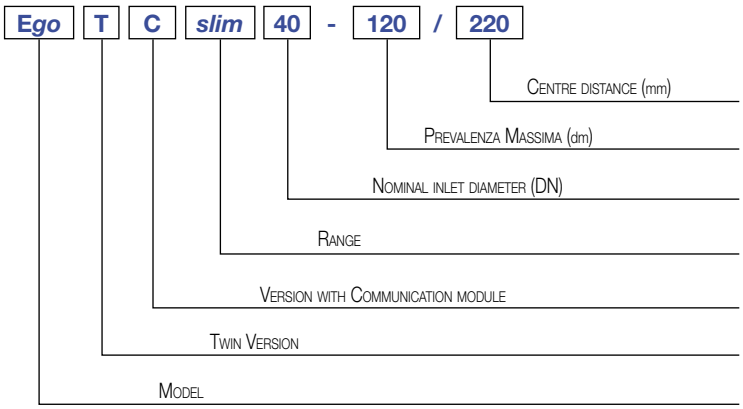

The content of this publication should not be considered mandatory, EBARA Pumps Europe S.p.A. reserves the right to change the content without prior notice.

Ego slim

FLANGED CIRCULATORS

Ego (T) (C) slim 40, 50, 65, 80

OPERATING MODES

The operating modes can be selected using the buttons located on the rear panel:

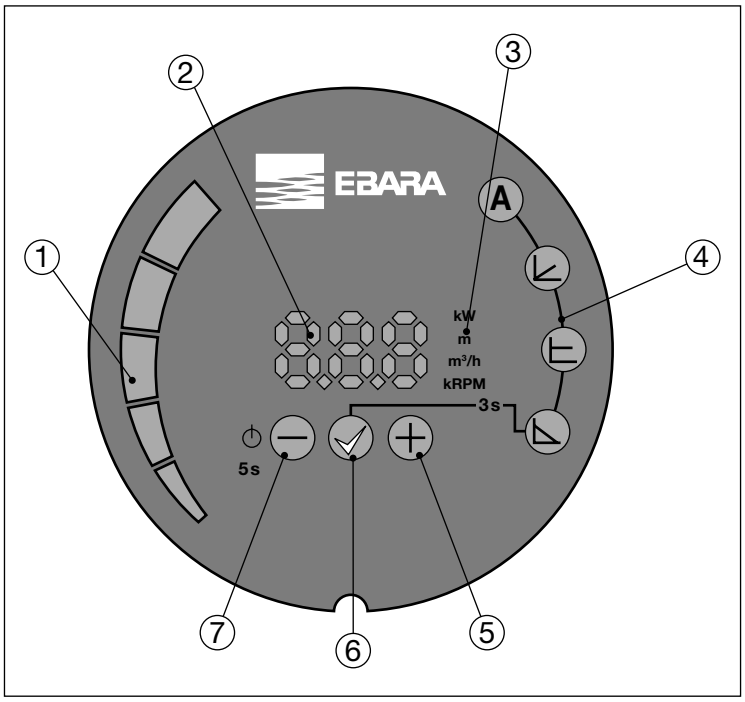

KEY

1 Segment display
2 Numeric display
3 Display of selected parameter
4 Display of selected mode
5 Selection key
6 Confirmation key
7 Selection key

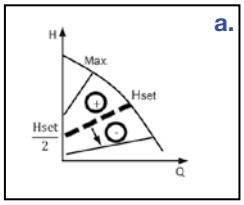

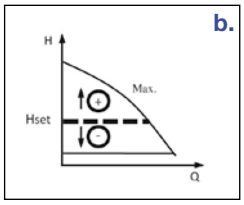

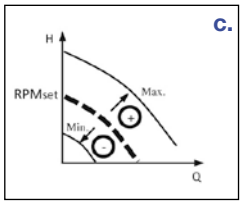

A **AUTO mode (factory setting)**

The circulator automatically adjusts the hydraulic performance depending on the actual requirements of the system, continuously measuring the optimal H/Q point. This operating mode is suitable for most applications and ensures high energy savings.

Proportional pressure (ΔP-v) - fig. a

The circulator adjusts the pump head depending on the flow rate, varying the latter linearly from a maximum value (Hset) to a minimum value (equal to $H_{set}/2$). The pressure value (Hset) is set via buttons ⊕ and ⊖ and is expressed in metres; the minimum value is automatically calculated by the circulator.

Constant pressure (ΔP-c) - fig. b

The circulators maintains the pump head constant when the flow rates varies. The value of the pressure (H_{set}) is set via buttons ⊕ and ⊖ and is expressed in metres.

Constant speed - fig. c

The circulators operates according to a constant curve set via buttons ⊕ and ⊖ (by selecting the rotation speed in "rpm").

REMOTE CONTROL

Standard configuration

The standard configuration of circulators Ego (T) provides:

- Ethernet connection for control via PC
- Digital inputs
- Output relay

Upon request

Upon request, the "Ego C" version equipped with an additional communication module is available. It includes the following:

- Analog control 0-10V
- Modbus RTU

The content of this publication should not be considered mandatory. EBARA Pumps Europe S.p.A. reserves the right to change the content without prior notice.

COMMUNICATION MODULE

Versions ***Ego* T C easy** are equipped with an additional communication module which can be accessed by opening the rear display panel. The communication module is also available as an optional accessory. It is compatible with all standard models *Ego* easy.
The module enables running a wide range of applications remotely:

- **Access via Ethernet**
- **Remote On/Off**
- **Analog control 0-10V**
- **Modbus RTU**
- **Alarm/state relay**

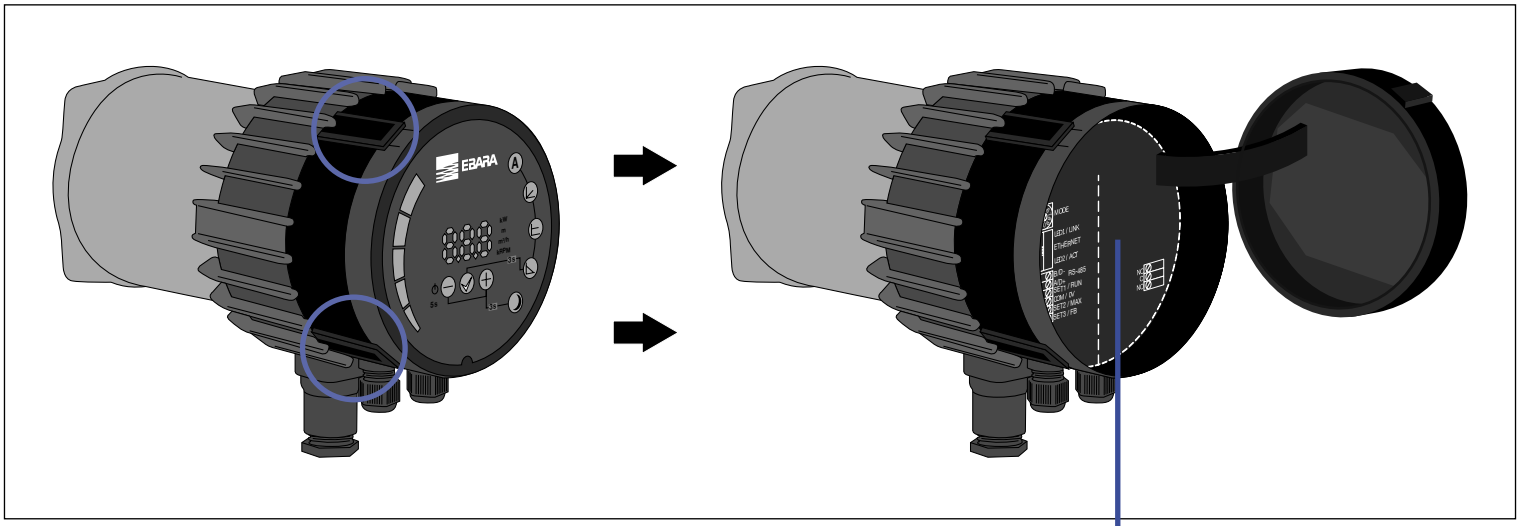

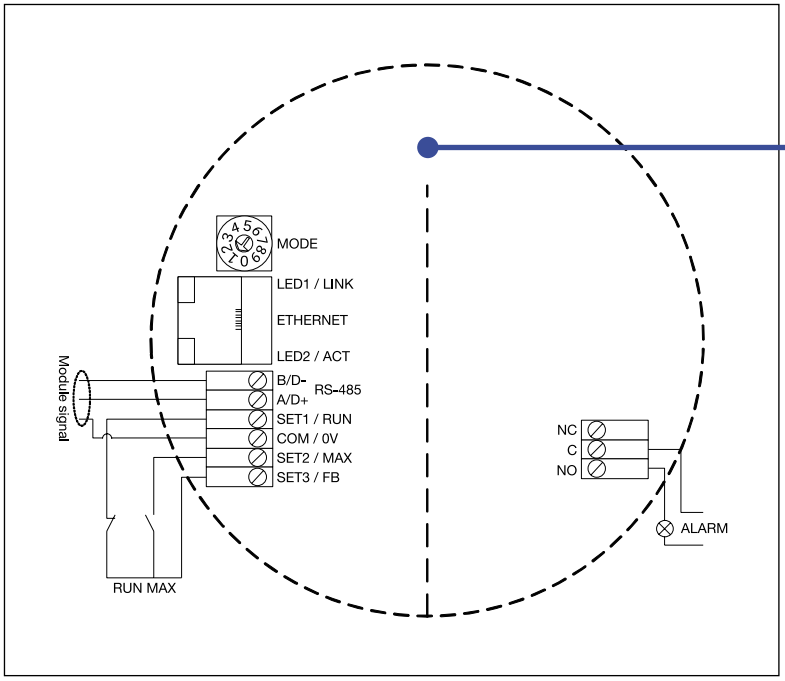

The content of this publication should not be considered mandatory, EBARA Pumps Europe S.p.A. reserves the right to change the content without prior notice.

Ego slim

FLANGED CIRCULATORS

Ego (T) (C) slim 40, 50, 65, 80

PERFORMANCE CURVES

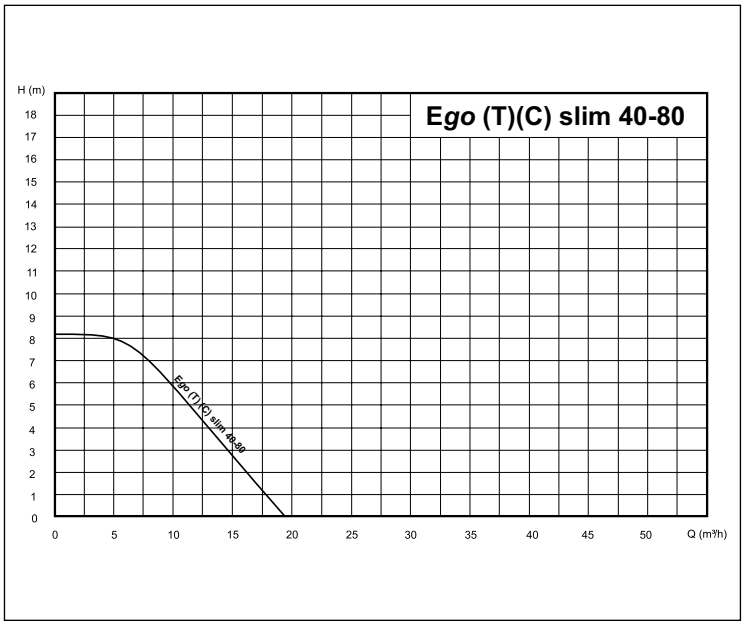

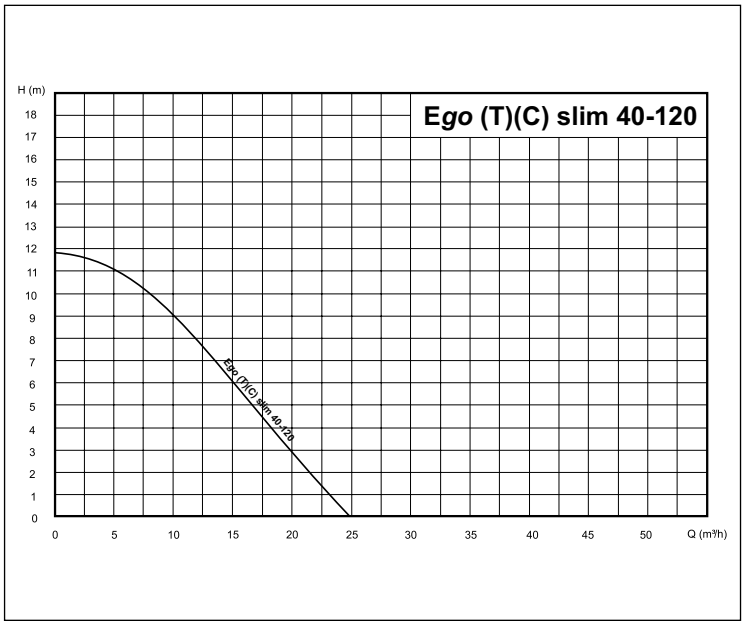

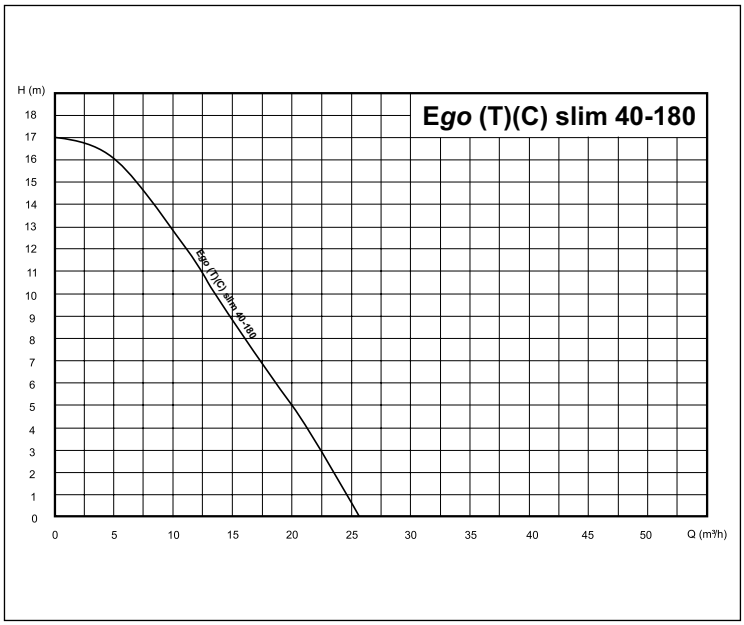

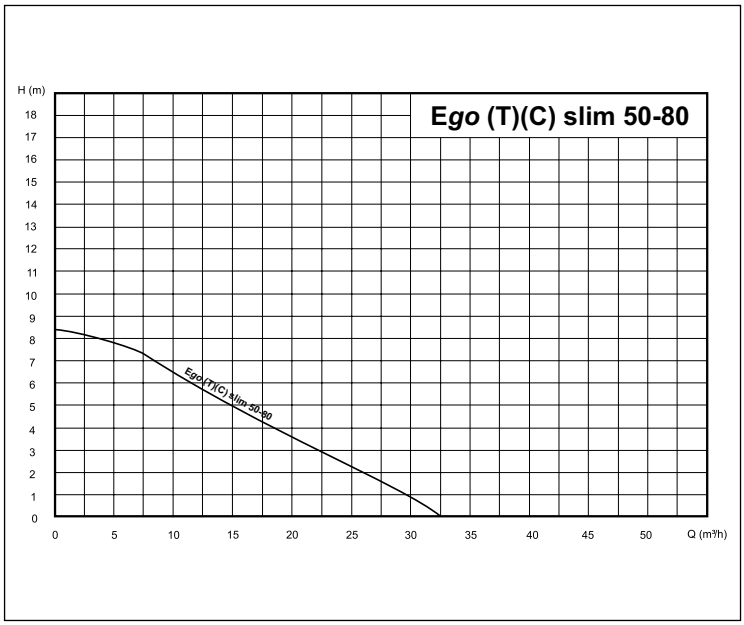

The content of this publication should not be considered mandatory. EBARA Pumps Europe S.p.A. reserves the right to change the content without prior notice.

Ego slim

FLANGED CIRCULATORS

Ego (T) (C) slim 40, 50, 65, 80

PERFORMANCE CURVES

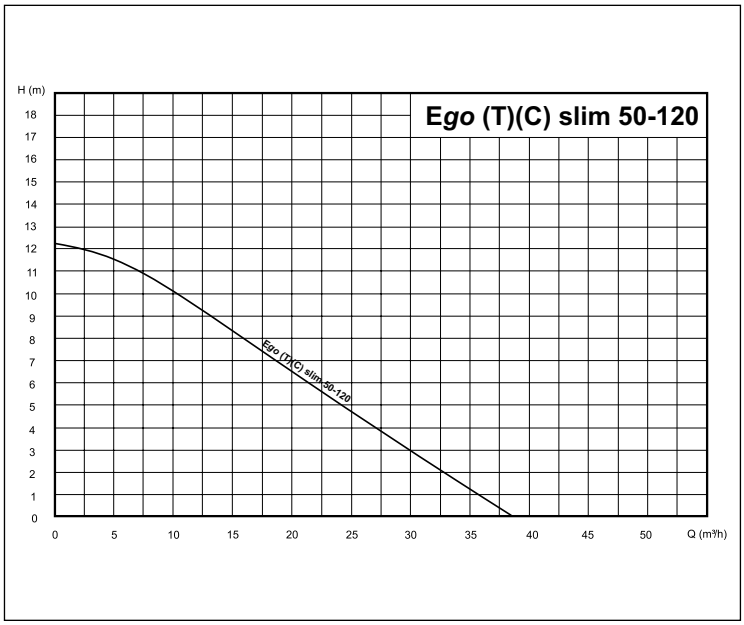

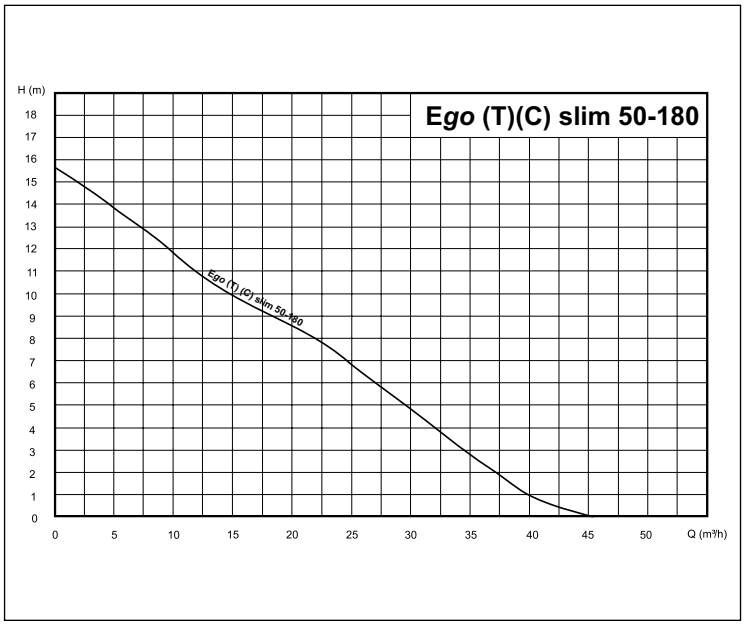

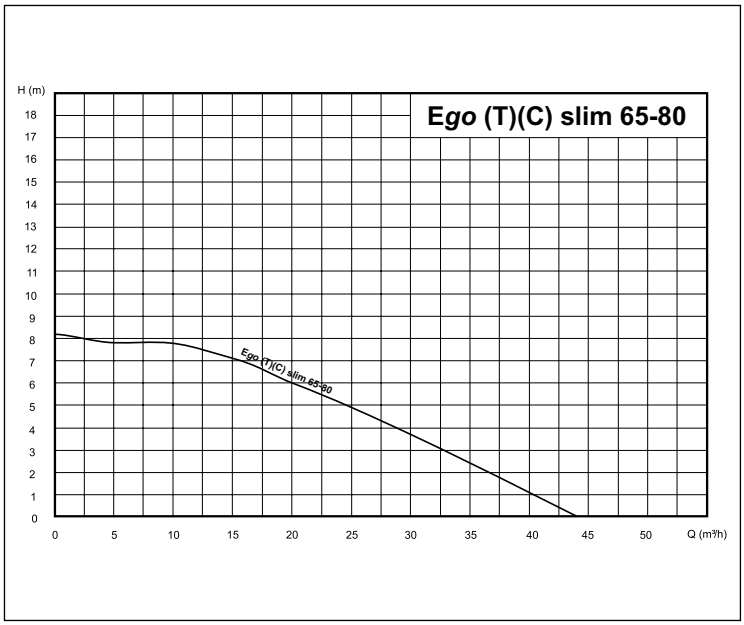

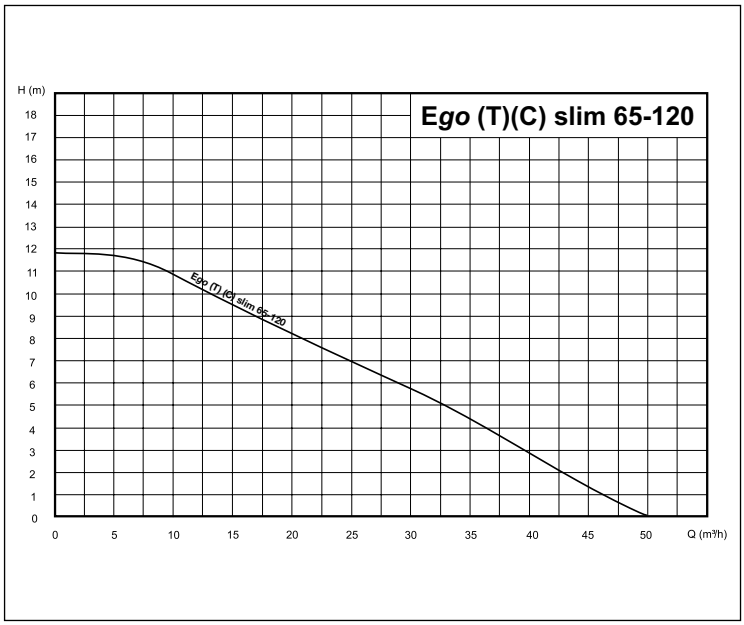

The content of this publication should not be considered mandatory. EBARA Pumps Europe S.p.A. reserves the right to change the content without prior notice.

Ego slim

FLANGED CIRCULATORS

Ego (T) (C) *slim 40, 50, 65, 80*

PERFORMANCE CURVES

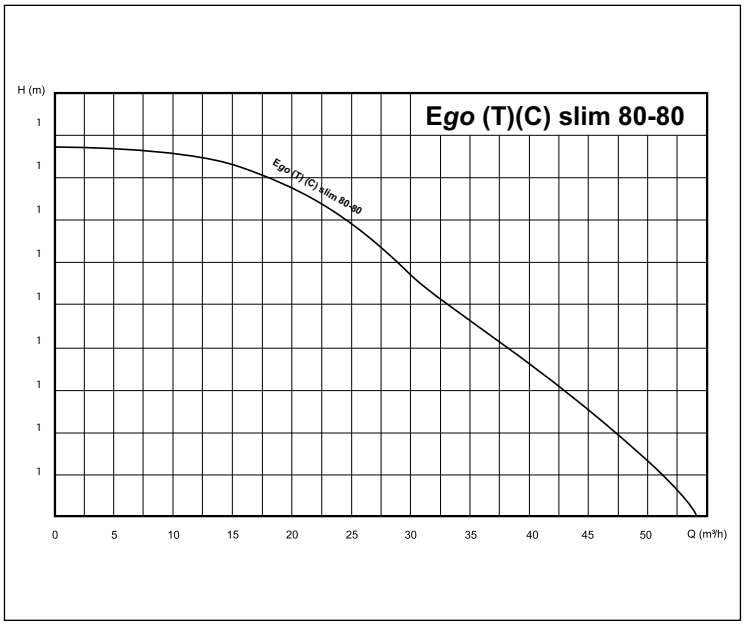

The content of this publication should not be considered mandatory. EBARA Pumps Europe S.p.A. reserves the right to change the content without prior notice.

Ego slim

FLANGED CIRCULATORS

Ego (T) (C) *slim 40, 50, 65, 80*

SECTIONAL VIEW

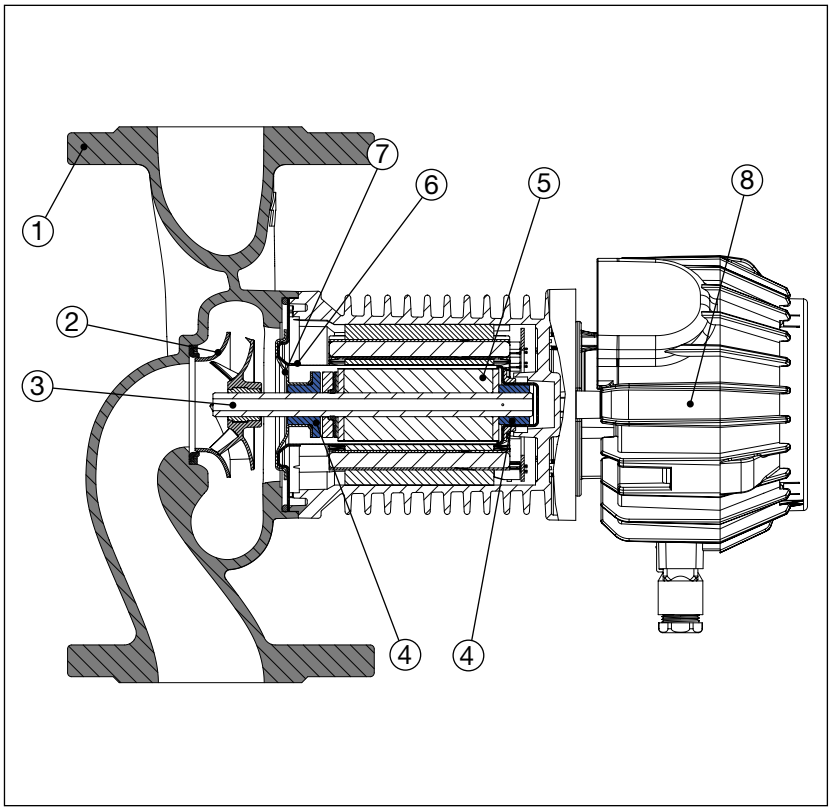

TABLE OF MATERIALS

Ref.	Part	Material
1	Pump body	Cast iron with cataphoresis coating
2	Impeller	Technopolymer
3	Shaft	Stainless steel
4	Bearings	Graphite
5	Rotor	Coated in stainless steel
6	Rotor can	AISI 316 Stainless Steel
7	Bearing plate	AISI 316 Stainless Steel
8	Electronic board	-

TECHNICAL FEATURES - single

Model	EEI (energy efficiency index)	Pipe connection	Power P_1 [W] P_{max}	Current consumption [A] I_{min} - I_{max}	Weight [kg]
Ego slim 40-80/220	≤0,21	DN 40	270	1,2	9,6
Ego slim 40-80/250	≤0,21	DN 40	270	1,2	9,6
Ego slim 40-120	≤0,21	DN 40	480	2,3	12,5
Ego slim 40-180	≤0,23	DN 40	680	2,9	13,5
Ego slim 50-80	≤0,22	DN 50	370	1,7	12,5
Ego slim 50-120	≤0,21	DN 50	560	2,5	16,0
Ego slim 50-180	≤0,20	DN 50	800	3,7	16,0
Ego slim 65-80	≤0,22	DN 65	560	2,5	16,4
Ego slim 65-120	≤0,20	DN 65	800	3,7	19,3
Ego slim 80-80	≤0,20	DN 80	800	3,7	27,0

TECHNICAL FEATURES - twin

Model	EEI (energy efficiency index)	Pipe connection	Power P_1 [W] P_{max}	Current consumption [A] I_{min} - I_{max}	Weight [kg]
Ego TC slim 40-80/220	≤0,21	DN 40	270	1,2	17,0
Ego TC slim 40-80/250	≤0,21	DN 40	270	1,2	17,0
Ego TC slim 40-120	≤0,21	DN 40	480	2,3	23,0
Ego TC slim 40-180	≤0,23	DN 40	680	2,9	25,5
Ego TC slim 50-80	≤0,22	DN 50	370	1,7	23,0
Ego TC slim 50-120	≤0,21	DN 50	560	2,5	33,0
Ego TC slim 50-180	≤0,20	DN 50	800	3,7	35,0
Ego TC slim 65-80	≤0,22	DN 65	560	2,5	33,0
Ego TC slim 65-120	≤0,20	DN 65	800	3,7	41,0
Ego TC slim 80-80	≤0,20	DN 80	800	3,7	47,0

The content of this publication should not be considered mandatory. EBARA Pumps Europe S.p.A. reserves the right to change the content without prior notice.

Ego slim

FLANGED CIRCULATORS

Ego (T) (C) slim 40, 50, 65, 80

DIMENSIONS - single

Versione 8 - 12 m

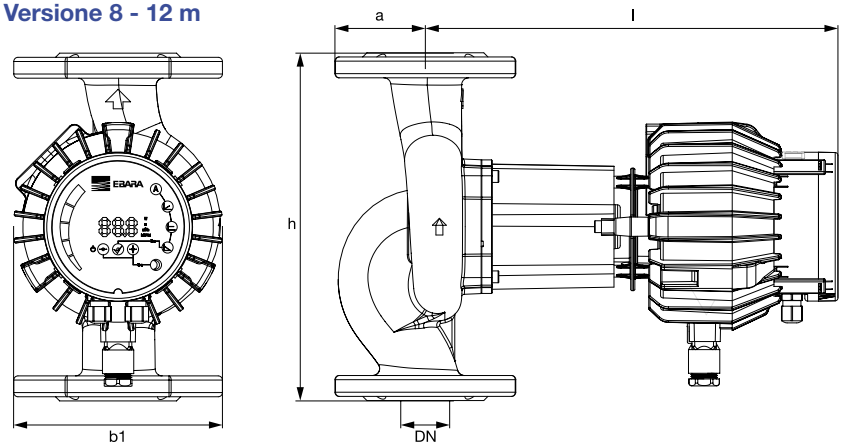

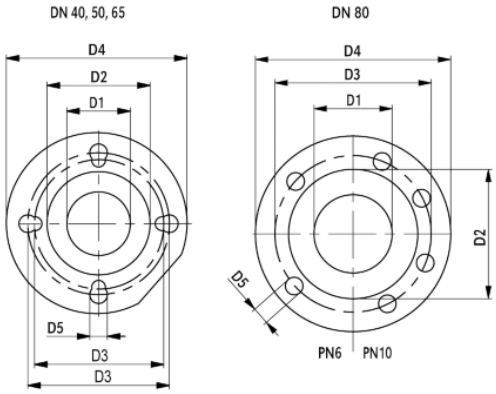

Versione 18 m

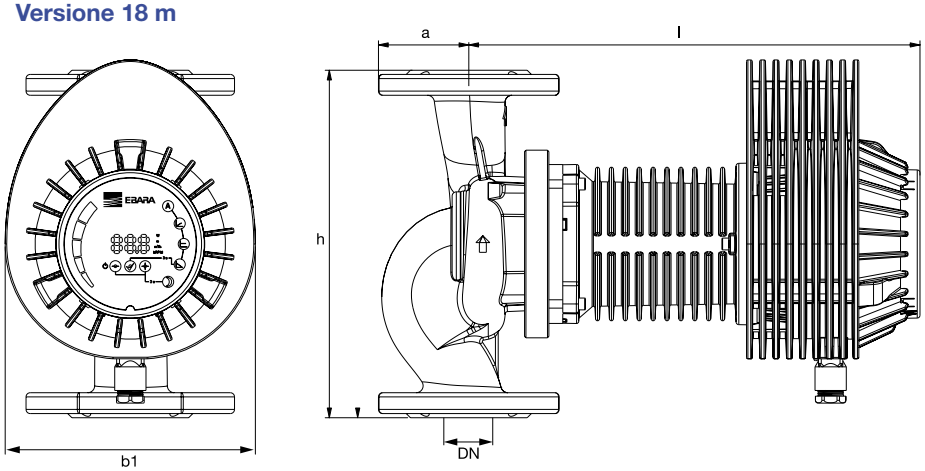

The content of this publication should not be considered mandatory. EBARA Pumps Europe S.p.A. reserves the right to change the content without prior notice.

TABLE OF DIMENSIONS - single

Model	Dimensions [mm]										
	DN	b1	l	h	a	D1	D2	D3	D4	D5	n. of holes
Ego slim 40-80/220	40	150	265 (297)*	220	65	40	90	110/110	150	14/19	4
Ego slim 40-80/250	40	150	265 (297)*	250	65	40	90	110/110	150	14/19	4
Ego slim 40-120	40	150	265 (297)*	250	65	40	90	110/110	150	14/19	4
Ego slim 40-180	40	180	325(357)*	250	65	40	90	110/110	150	14/19	4
Ego slim 50-80	50	167	301 (333)*	280	72	50	98	110/125	165	14/19	4
Ego slim 50-120	50	167	301 (333)*	280	72	50	98	110/125	165	14/19	4
Ego slim 50-180	50	182	311 (343)*	280	72	50	98	110/125	165	14/19	4
Ego slim 65-80	65	186	311 (343)*	340	75	65	132	130/145	185	14/19	4
Ego slim 65-120	65	193	322 (354)*	340	75	65	132	130/145	185	14/19	4
Ego slim 80-80	80	221	332 (364)*	360	93	80	128	160	200	19	8

Ego slim

FLANGED CIRCULATORS

Ego (T) (C) slim 40, 50, 65, 80

DIMENSIONS - twin

Versione 8 - 12 m

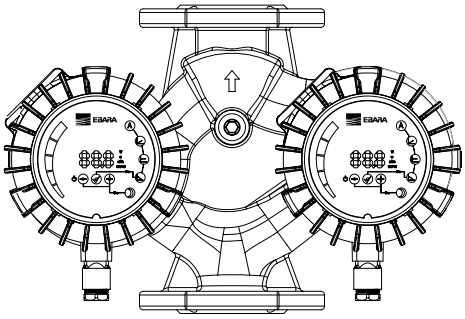

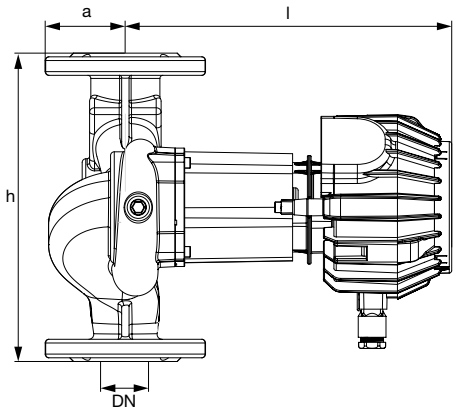

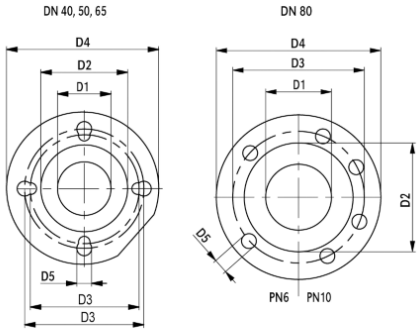

Versione 18 m

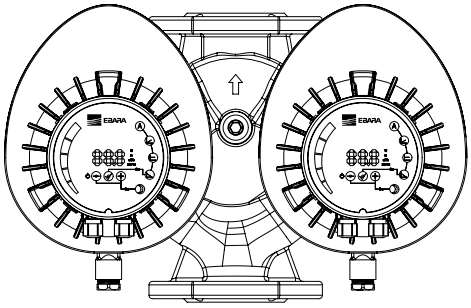

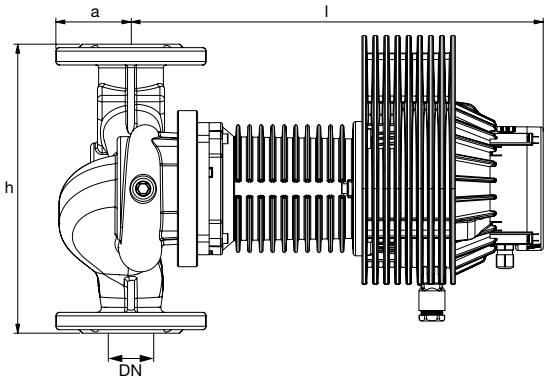

DIMENSIONS - twin

Model	Dimensions [mm]									
	DN	l	h	a	D1	D2	D3	D4	D5	n. of holes
Ego TC slim 40-80/220	40	297	220	65	40	90	110/110	150	14/19	4
Ego TC slim 40-80/250	40	297	250	65	40	90	110/110	150	14/19	4
Ego TC slim 40-120	40	297	250	65	40	90	110/110	150	14/19	4
Ego TC slim 40-180	40	357	250	65	40	90	110/110	150	14/19	4
Ego TC slim 50-80	50	333	280	72	50	98	110/125	165	14/19	4
Ego TC slim 50-120	50	333	280	72	50	98	110/125	165	14/19	4
Ego TC slim 50-180	50	343	280	72	50	98	110/125	165	14/19	4
Ego TC slim 65-80	65	343	340	75	65	132	130/145	185	14/19	4
Ego TC slim 65-120	65	352	340	75	65	132	130/145	185	14/19	4
Ego TC slim 80-80	80	364	360	93	80	128	160	200	19	8

The content of this publication should not be considered mandatory, EBARA Pumps Europe S.p.A. reserves the right to change the content without prior notice.

Ego slim

FLANGED CIRCULATORS

Ego (T) (C) slim 40, 50, 65, 80

ASSEMBLY POSITION

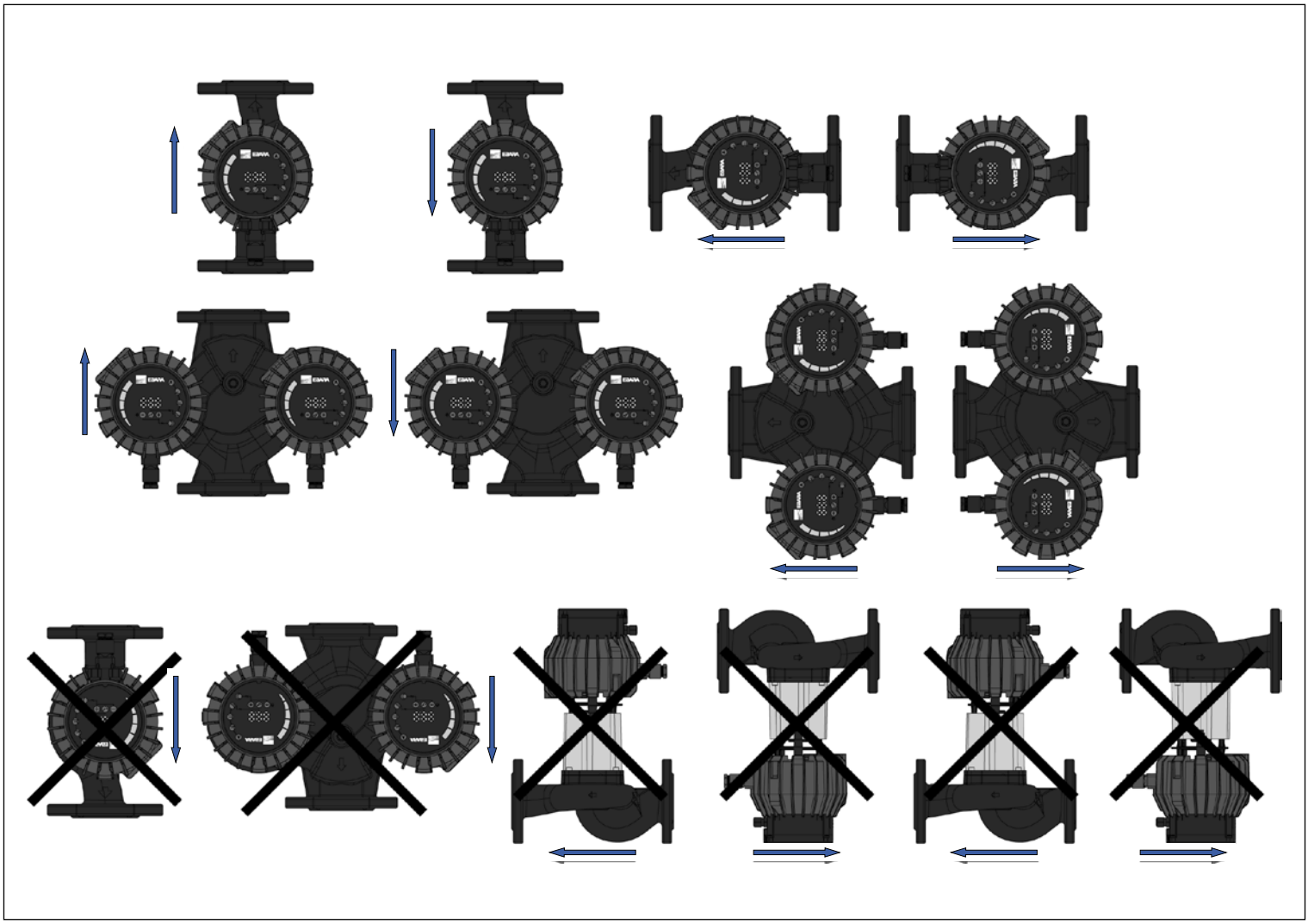

The content of this publication should not be considered mandatory. EBARA Pumps Europe S.p.A. reserves the right to change the content without prior notice.

Ego

FLANGED CIRCULATORS (12 e 18 m version)

Ego (T) C (H) 65, 80, 100

High performance wet rotor circulation pump with flanged or threaded connection, motor with permanent magnets and built-in electronic controller.

APPLICATIONS

Residential and industrial heating and air-conditioning systems.

FEATURES

- Built-in frequency converter
- Multiple operating modes
- Numeric and graphical display for easy setup and visualisation of parameters
- Automatic venting function
- Built-in overload safety device
- High input torque (with consequent automatic release of the rotor)
- Optional version with built-in communication module (with Modbus, contact 0-10V etc.)

PUMP TECHNICAL DATA

- Liquid temperature: -10 ÷ +110 °C
- Room temperature: 0 ÷ +40 °C
- Relative air humidity: ≤ 95%
- Allowed fluids: clean, not aggressive and not flammable, free of solid particles or fibres
- Maximum pressure: 10 bar
- Minimum suction pressure:
  - 0,3 bar a 50 °C
  - 1,1 bar a 80 °C
  - 1,6 bar a 110 °C
- Maximum amount of glycol: 20%*
- Flanged inlets: from DN 65 to DN 100
- Protection degree: IP44

MOTOR TECHNICAL DATA

- Type: synchronous with permanent magnets
- Motor speed: variable
- Supply voltage: 1~230V
- Frequency: 50/60 Hz
- Insulation class: F

** For greater amounts please check the final viscosity and the conditions of use*

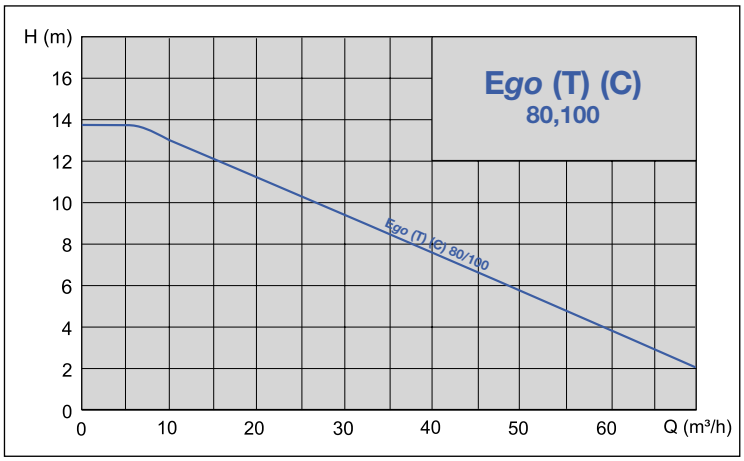

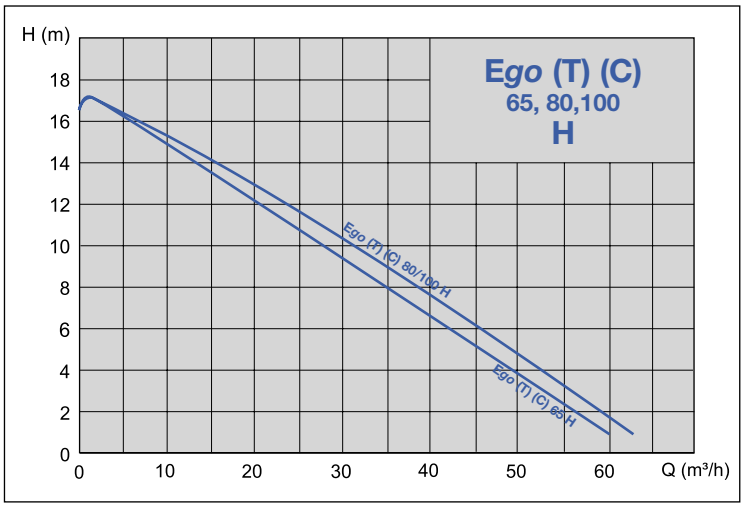

IDENTIFICATION CODE

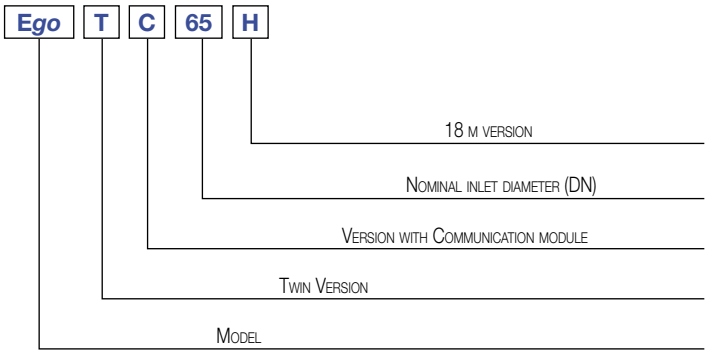

The content of this publication should not be considered mandatory. EBARA Pumps Europe S.p.A. reserves the right to change the content without prior notice.

FLANGED CIRCULATORS (12 e 18 m version)

Ego (T) C (H) 65, 80, 100

OPERATING MODES

The operating modes can be selected using the buttons located on the rear panel:

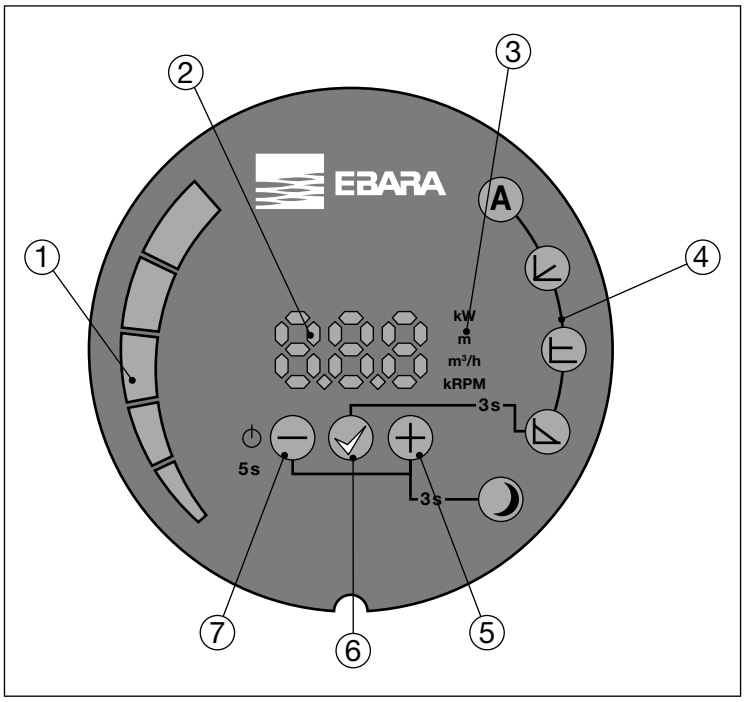

KEY

1 Segment display
2 Numeric display
3 Display of selected parameter
4 Display of selected mode
5 Selection key
6 Confirmation key
7 Selection key

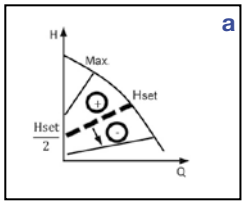

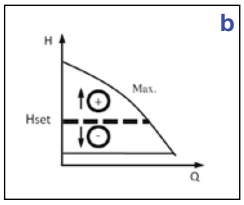

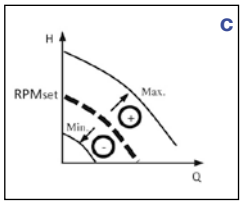

AUTO mode (factory setting)

The circulator automatically adjusts the hydraulic performance depending on the actual requirements of the system, continuously measuring the optimal H/Q point. This operating mode is suitable for most applications and ensures high energy savings.

Proportional pressure (ΔP-v) - fig. a

The circulator adjusts the pump head depending on the flow rate, varying the latter linearly from a maximum value (Hset) to a minimum value (equal to $H_{set}/2$). The pressure value (Hset) is set via buttons ⊕ and ⊖ and is expressed in metres; the minimum value is automatically calculated by the circulator.

Constant pressure (ΔP-c) - fig. b

The circulators maintains the pump head constant when the flow rates varies. The value of the pressure (H_{set}) is set via buttons ⊕ and ⊖ and is expressed in metres.

Constant speed - fig. c

The circulators operates according to a constant curve set via buttons ⊕ and ⊖ (by selecting the rotation speed in “rpm”).

Night mode

Night mode can be activated in combination with any of the operating modes listed above, and allows the circulator to operate at a minimum curve (therefore with very low consumption) when it detects a decrease in liquid temperature of 15-20 ° C. When temperature rises, it automatically returns to normal operating curve (according to the selected mode).

The content of this publication should not be considered mandatory. EBARA Pumps Europe S.p.A. reserves the right to change the content without prior notice.

FLANGED CIRCULATORS (12 e 18 m version)

Ego (T) C (H) 65, 80, 100

PERFORMANCE CURVES

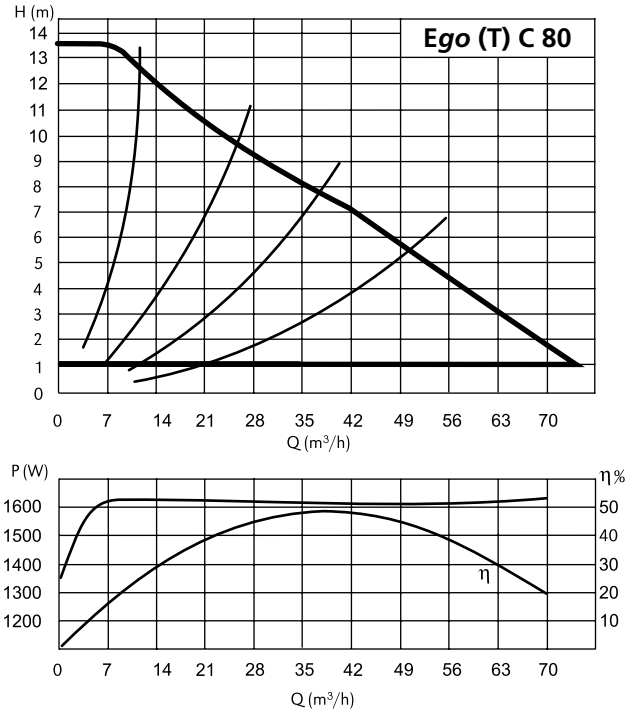

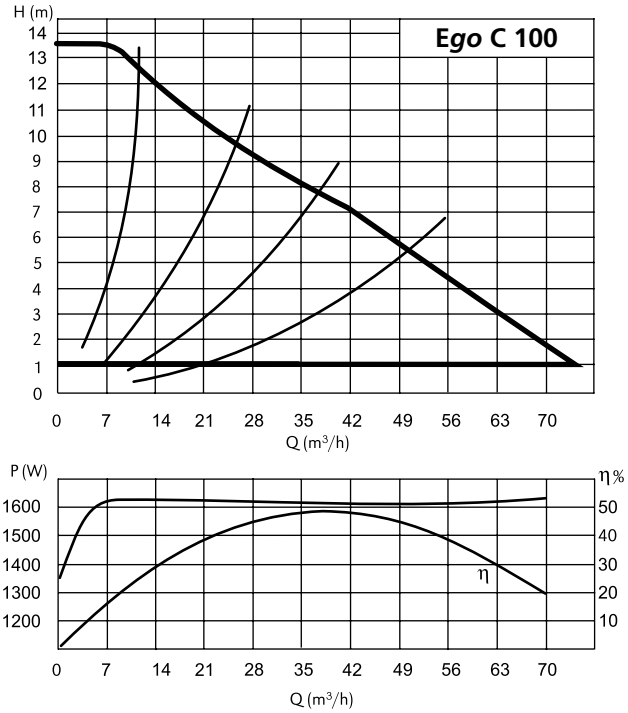

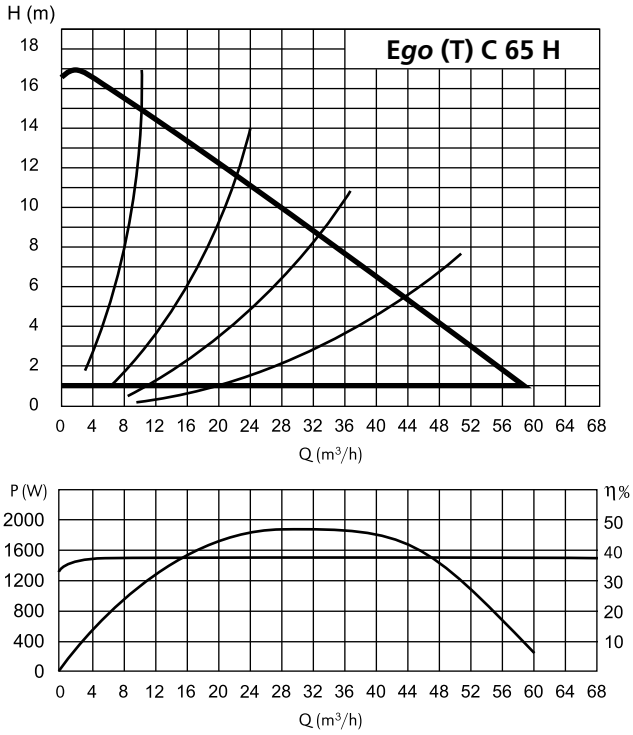

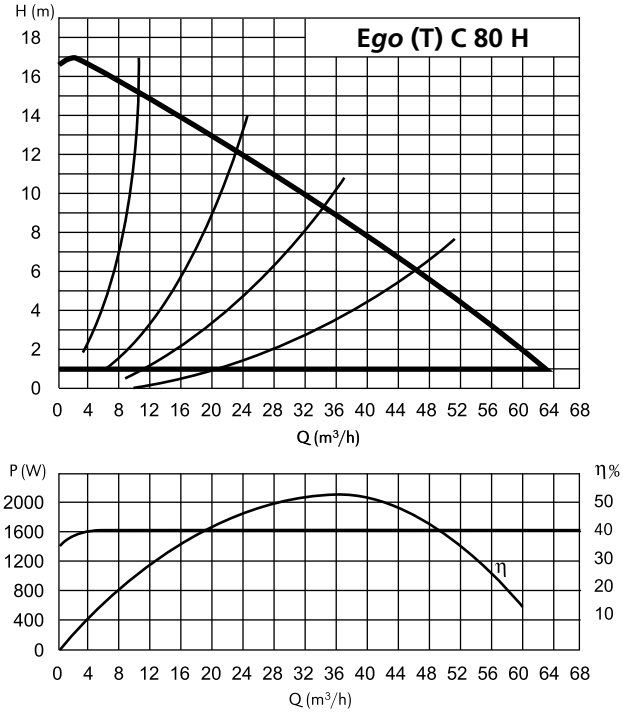

The content of this publication should not be considered mandatory, EBARA Pumps Europe S.p.A. reserves the right to change the content without prior notice.

FLANGED CIRCULATORS (12 e 18 m version)

Ego (T) C (H) 65, 80, 100

PERFORMANCE CURVES

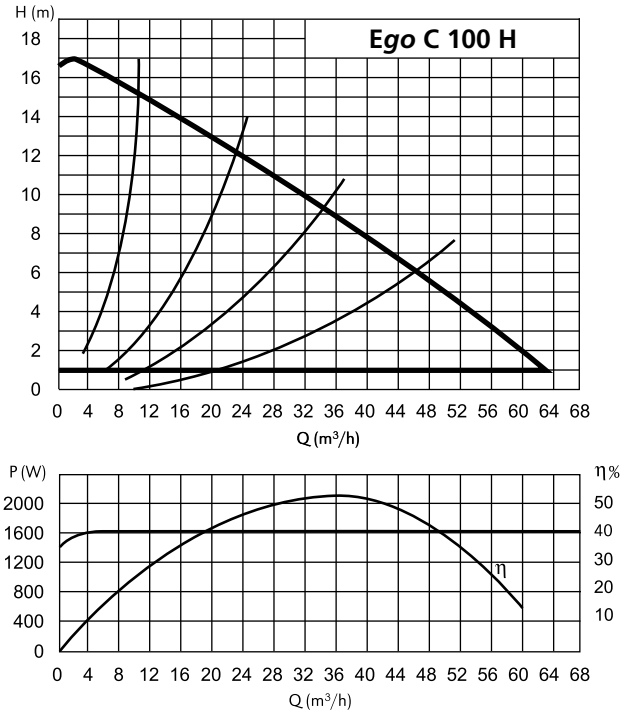

The content of this publication should not be considered mandatory. EBARA Pumps Europe S.p.A. reserves the right to change the content without prior notice.

Ego

FLANGED CIRCULATORS (12 e 18 m version)

Ego (T) C (H) 65, 80, 100

SECTIONAL VIEW

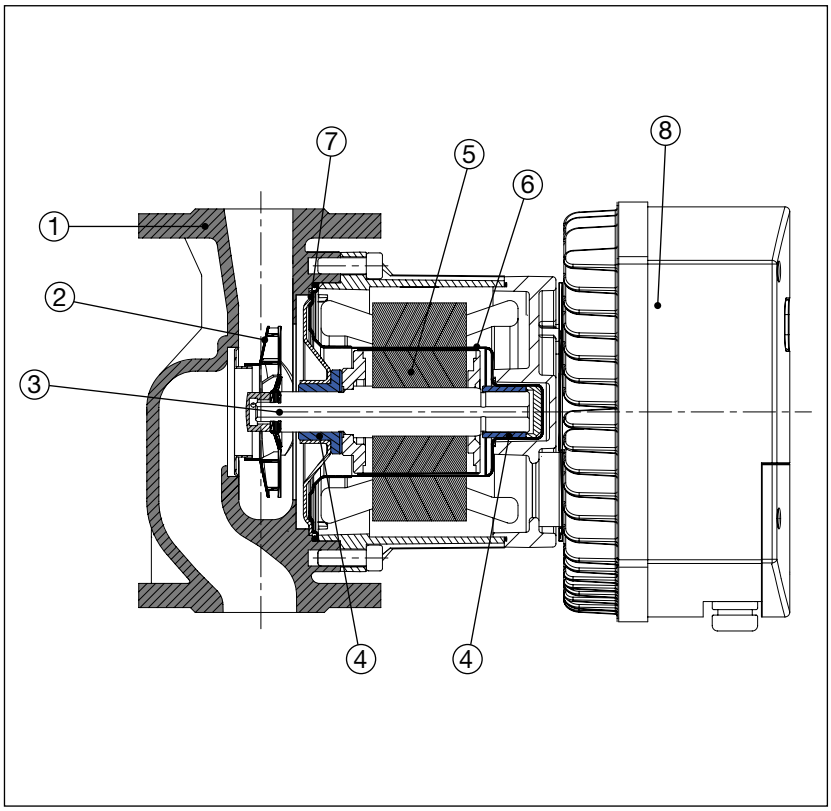

TABLE OF MATERIALS

Ref.	Part	Material
1	Pump body	Cast iron with cataphoresis coated
2	Impeller	Stainless steel
3	Shaft	Stainless steel
4	Bearings	Graphite
5	Rotor	Coated in stainless steel
6	Rotor can	AISI 316 Stainless Steel
7	Bearing plate	AISI 316 Stainless Steel
8	Electronic board	-

TECHNICAL FEATURES - single

Model	EEI (energy efficiency index)	Pipe connection	Power P_1 [W] P_{max}	Current consumption [A] I_{min} - I_{max}	Weight [kg]
Ego C 65 H	≤ 0,23	DN65	1500	6,7	39,0
Ego C 80	≤ 0,22	DN80	1600	6,9	42,0
Ego C 80 H	≤ 0,23	DN80	1600	7,3	41,0
Ego C 100	≤ 0,22	DN100	1600	6,9	46,0
Ego C 100 H	≤ 0,23	DN100	1600	7,2	45,0

TECHNICAL FEATURES - twin

Model	EEI (energy efficiency index)	Pipe connection	Power P_1 [W] P_{max}	Current consumption [A] I_{min} - I_{max}	Weight [kg]
Ego TC 65 H	≤ 0,23	DN65	1500	6,7	74,0
Ego TC 80	≤ 0,22	DN80	1600	6,9	77,0
Ego TC 80 H	≤ 0,23	DN80	1600	7,3	77,0

The content of this publication should not be considered mandatory. EBARA Pumps Europe S.p.A. reserves the right to change the content without prior notice.

Ego

FLANGED CIRCULATORS (12 e 18 m version)

Ego (T) C (H) 65, 80, 100

DIMENSIONS - single

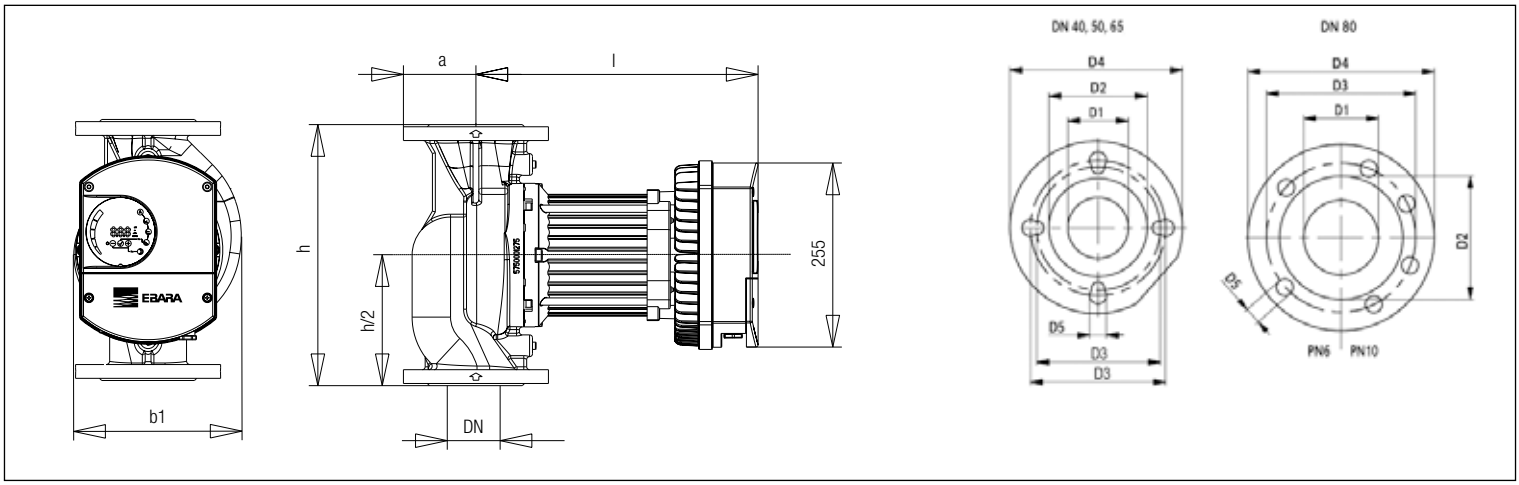

TABLE OF DIMENSIONS - single

Model	Dimensions [mm]												n. of holes
	DN	b1	b4	l	h	h1	a	D1	D2	D3	D4	D5	
Ego C 65 H	65	222	-	403	340	-	80	65	110	130/145	185	14/19	4
Ego C 80	80	230	-	403	360	-	100	80	128	160	200	19	8
Ego C 80 H	80	230	-	403	360	-	100	80	128	160	200	19	8
Ego C 100	100	230	-	403	360	-	110	100	-	180	220	19	8
Ego C 100 H	100	230	-	403	360	-	110	100	140	180	220	19	8

DIMENSIONS - twin

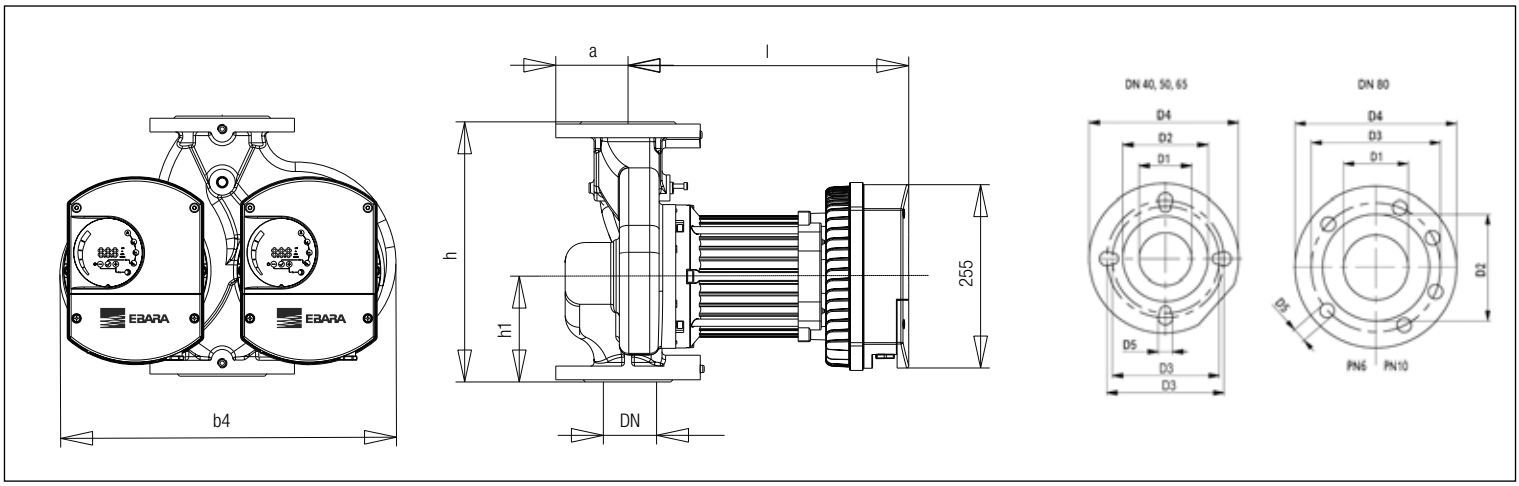

TABLE OF DIMENSIONS - twin

Model	Dimensions [mm]												n. of holes
	DN	b1	b4	l	h	h1	a	D1	D2	D3	D4	D5	
Ego TC 65 H	65	-	452	403	340	141	80	65	110	130/145	185	14/19	4
Ego TC 80	80	-	462	403	360	146	100	80	128	160	200	19	8
Ego TC 80 H	80	-	462	403	360	146	100	80	128	160	200	19	8

The content of this publication should not be considered mandatory. EBARA Pumps Europe S.p.A. reserves the right to change the content without prior notice.

FLANGED CIRCULATORS (12 e 18 m version)

Ego (T) C (H) 65, 80, 100

ASSEMBLY POSITION

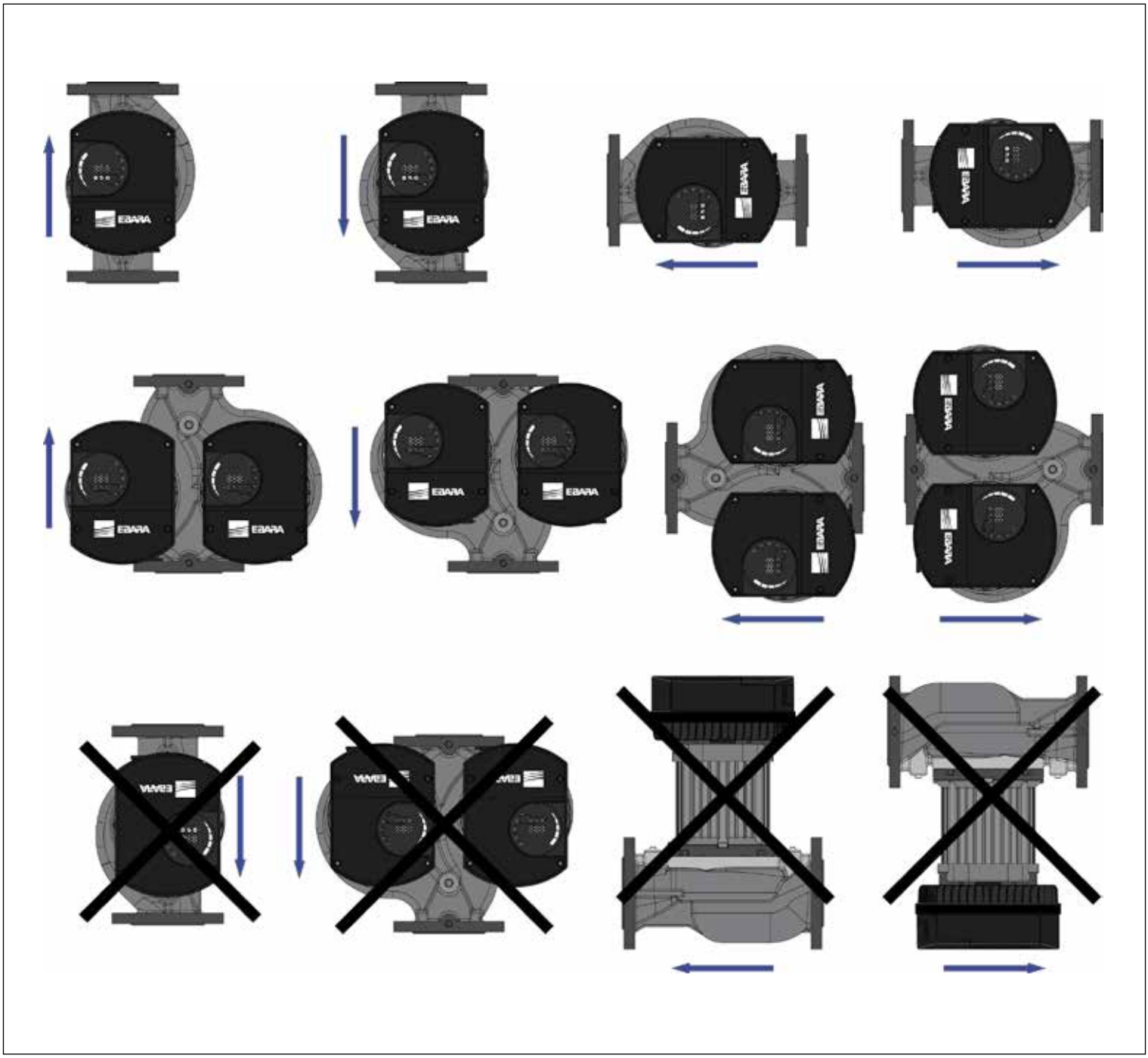

The content of this publication should not be considered mandatory. EBARA Pumps Europe S.p.A. reserves the right to change the content without prior notice.

Ego B

THREADED/FLANGED CIRCULATORS

Ego B - *Ego* B easy - *Ego* B slim

***Ego* B filettati**

***Ego* B easy**

***Ego* B flangiati**

High performance wet rotor circulation pump suitables for sanitary plants with threaded or flanged connection.
Ego B having bronze pump body and a permanent magnet motor, suitable for sanitary plants.

IMPIEGHI

- Small sanitary plants
- Medium and big sanitary systems

FEATURES

- Built-in frequency converter
- Numeric and graphical display for easy setup and visualisation of parameters
- Automatic venting function
- Built-in overload safety device
- High input torque (with consequent automatic release of the rotor)
- Possibility of four regulation modes (automatic, constant speed, variable Δp, constant Δp) and Night-time mode**
- Additional functions already integrated with electronic board, as remote control (ON/OFF) or output relay**

* *Only for Ego B easy and Ego B flanged models*
** *By adding module C for Ego B easy models; already included for Ego B flanged*

PUMP TECHNICAL DATA

- Liquid temperature: +5°C ÷ +65°C
- Room temperature: 0 ÷ +40 °C
- Relative air humidity: ≤ 95%
- Allowed fluids: clean, not aggressive and not flammable, free of solid particles or fibres
- Maximum pressure: 10 bar
- Minimum suction pressure:
  - 0,05 bar a 50 °C
- Threaded inlets: G1½ (in accordance with ISO 228)
- Flanged inlets: from DN 40 to DN 65
- Protection degree: IP44

MOTOR TECHNICAL DATA

- Type: synchronous with permanent magnets
- Motor speed: variable
- Supply voltage: 1~230V
- Frequency: 50/60 Hz
- Insulation class: F

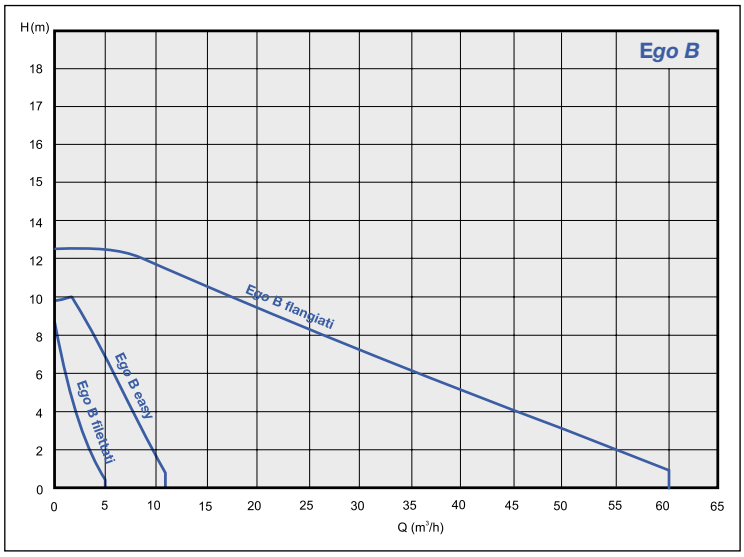

IDENTIFICATION CODE

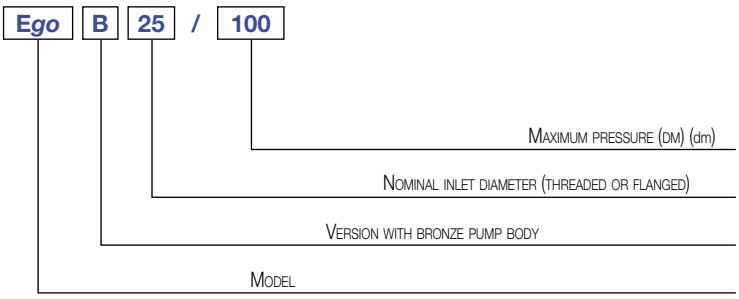

The content of this publication should not be considered mandatory. EBARA Pumps Europe S.p.A. reserves the right to change the content without prior notice.

OPERATING MODES

Two operating modes that can be selected using the LED button located on terminal box:

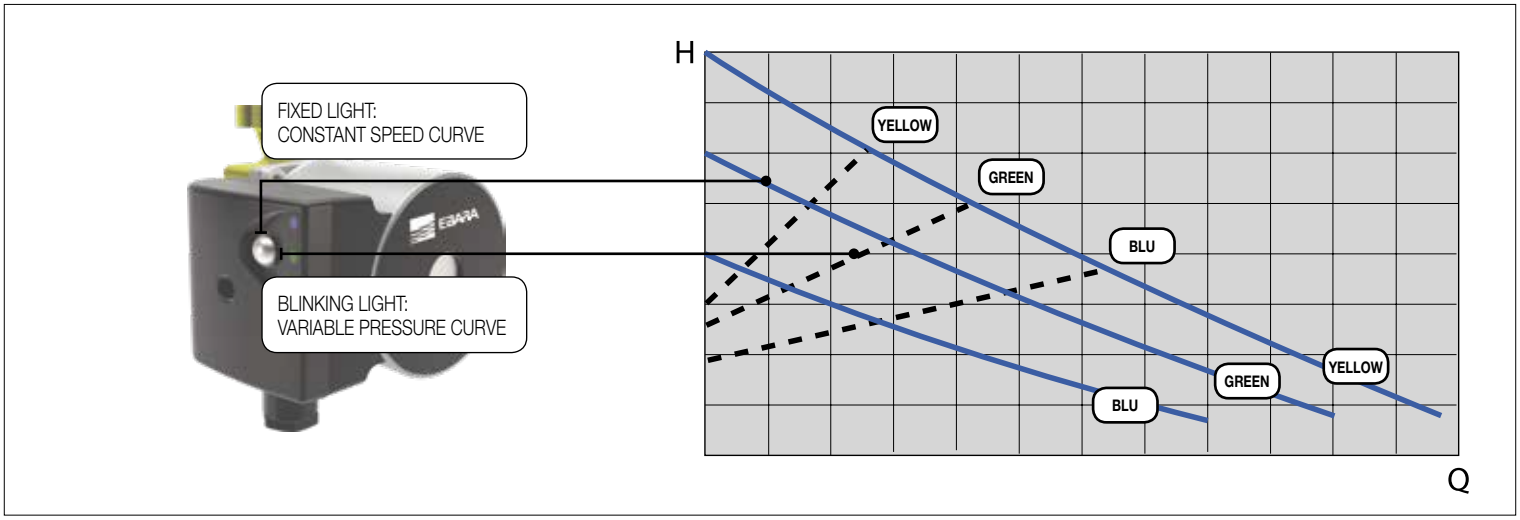

- **ΔP-v Proportional pressure (factory setting)**
  The circulators of this range can work in variable pressure **mode on 3 preset curves.** When this operating mode is enabled **the LED button blinks,** with a frequency that varies according to instant flow rate. **The colour of the LED identifies the selected curve** ("blue" indicates the lowest curve, "green" the intermediate curve, while "yellow" indicates the highest curve); to switch from one curve to another just press the button briefly.

From variable pressure modes (LED blinking) you can switch to constant speed mode (LED light steadily lit) keeping the LED button pressed for at least 5 seconds.

- **Constant speed**
  The circulators of this range can work at constant speed **on 3 preset curves.** In this case, the pump works as a usual pump without regulation and the power consumption remains constant. When this mode is active **the LED remains steadily lit;** in this case the colour of the LED **indicates the selected curve** ("blue" the lowest curve, "green" the intermediate curve, and "yellow" the highest curve). To switch from one curve to another, briefly press the button to return to variable pressure mode, select the desired curve (indicated by the colour of the LED) and then press and hold down the button.

The content of this publication should not be considered mandatory. EBARA Pumps Europe S.p.A. reserves the right to change the content without prior notice.

THREADED/FLANGED CIRCULATORS

Ego B - *Ego* B easy - *Ego* B slim

OPERATING MODES - *Ego* B easy/*Ego* B flanged

The operating modes can be selected using the buttons located on the rear panel:

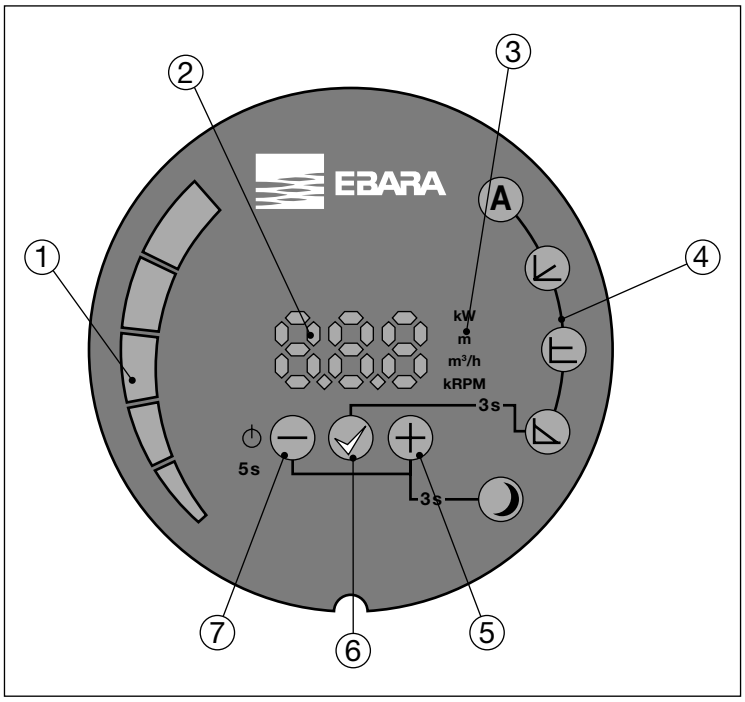

KEY

1 Segment display
2 Numeric display
3 Display of selected parameter
4 Display of selected mode
5 Selection key
6 Confirmation key
7 Selection key

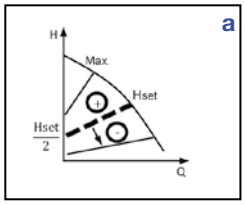

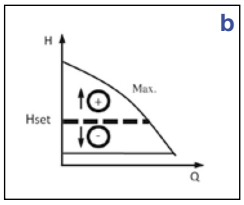

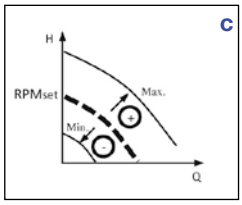

AUTO mode (factory setting)
The circulator automatically adjusts the hydraulic performance depending on the actual requirements of the system, continuously measuring the optimal H/Q point. This operating mode is suitable for most applications and ensures high energy savings.

Proportional pressure (ΔP-v) - fig. a
The circulator adjusts the pump head depending on the flow rate, varying the latter linearly from a maximum value (Hset) to a minimum value (equal to $H_{set}/2$). The pressure value (Hset) is set via buttons ⊕ and ⊖ and is expressed in metres; the minimum value is automatically calculated by the circulator.

Constant pressure (ΔP-c) - fig. b
The circulators maintains the pump head constant when the flow rates varies. The value of the pressure (H_{set}) is set via buttons ⊕ and ⊖ and is expressed in metres.

Constant speed - fig. c
The circulators operates according to a constant curve set via buttons ⊕ and ⊖ (by selecting the rotation speed in "rpm").

Night mode
Night mode can be activated in combination with any of the operating modes listed above, and allows the circulator to operate at a minimum curve (therefore with very low consumption) when it detects a decrease in liquid temperature of 15-20 ° C. When temperature rises, it automatically returns to normal operating curve (according to the selected mode).

The content of this publication should not be considered mandatory. EBARA Pumps Europe S.p.A. reserves the right to change the content without prior notice.

THREADED/FLANGED CIRCULATORS

Ego B - *Ego* B easy - *Ego* B slim

PERFORMANCE CURVES - *Ego* B filettati

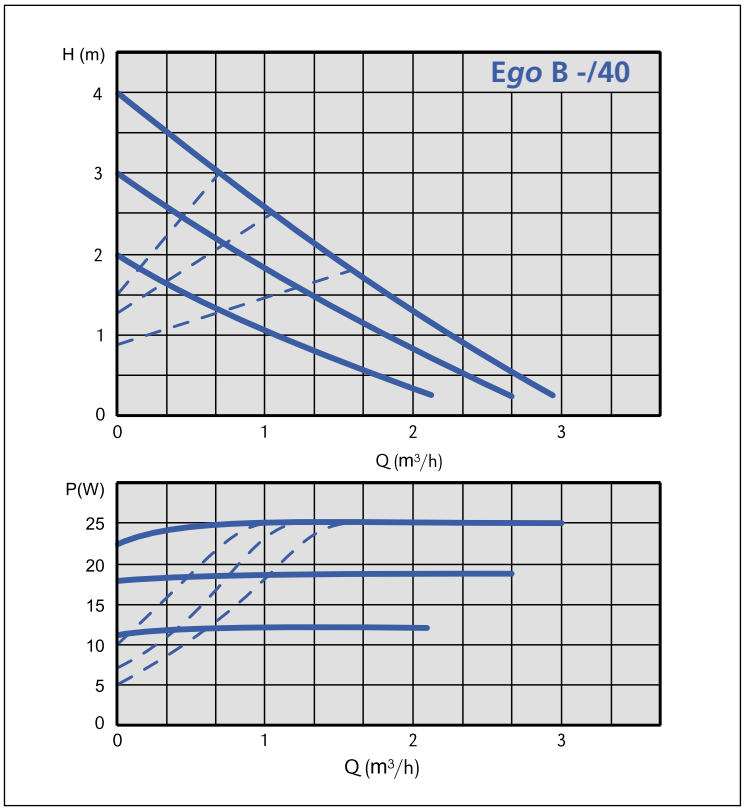

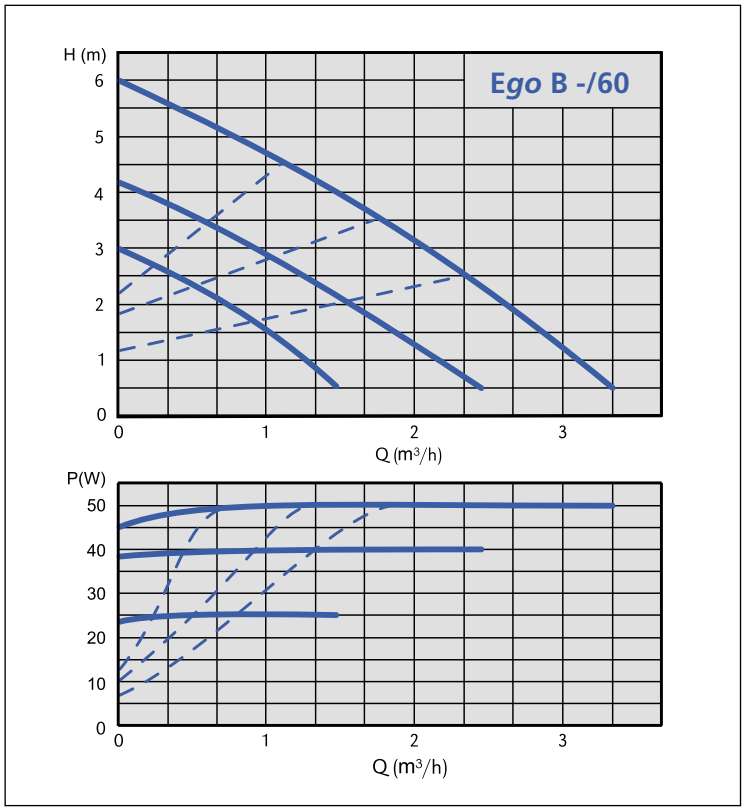

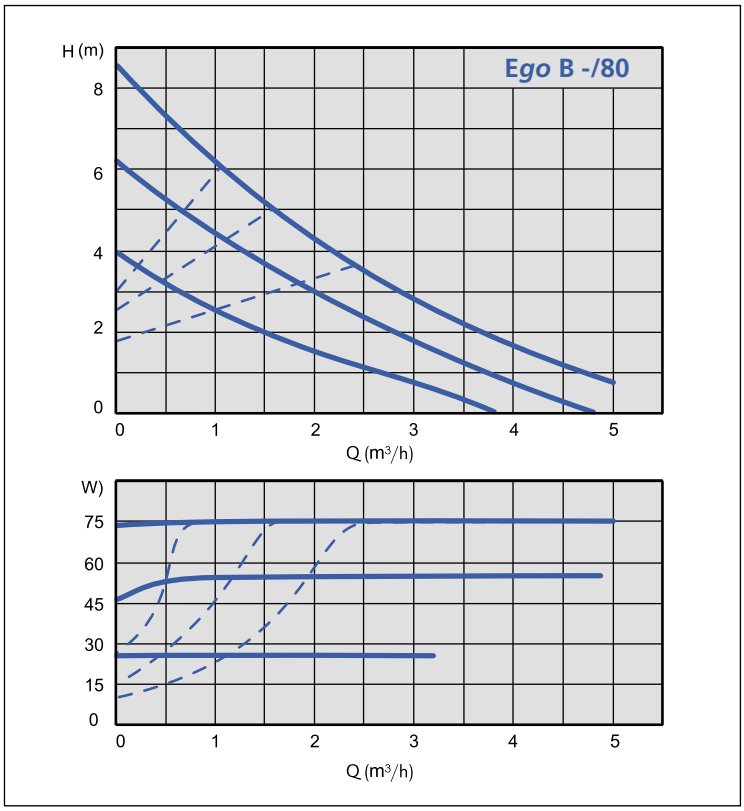

The content of this publication should not be considered mandatory. EBARA Pumps Europe S.p.A. reserves the right to change the content without prior notice.

PERFORMANCE CURVES - *Ego* B easy

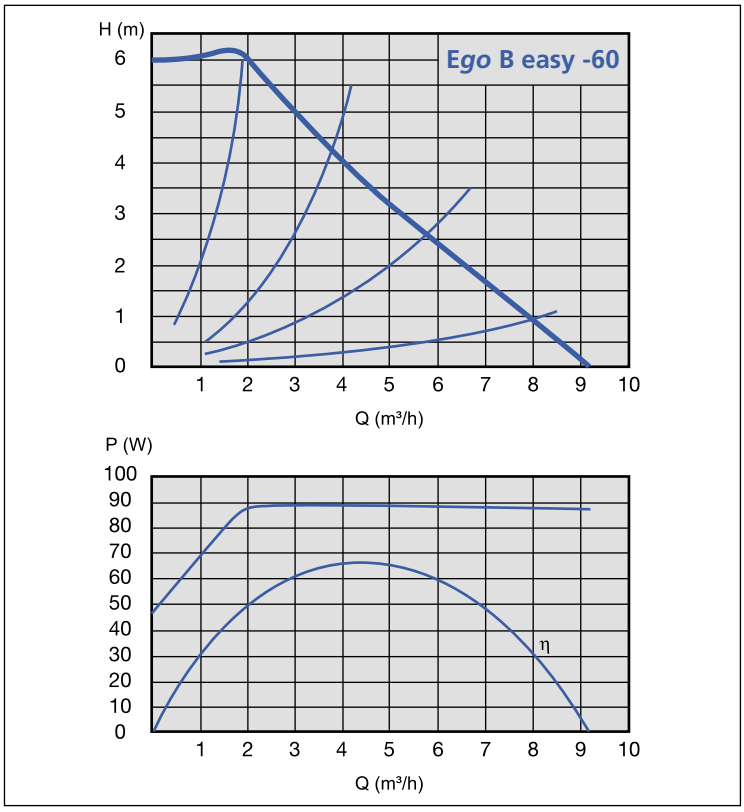

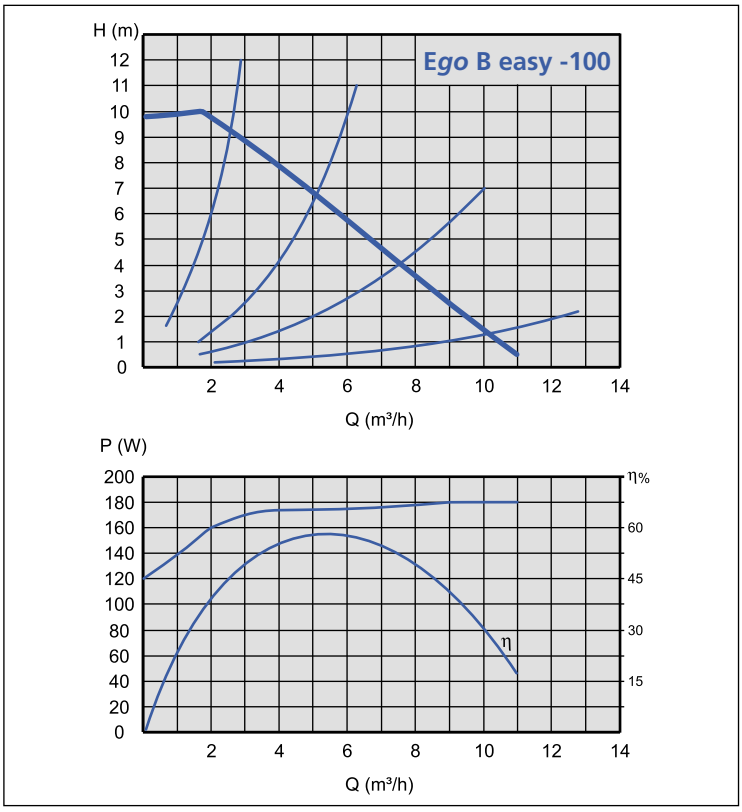

The content of this publication should not be considered mandatory. EBARA Pumps Europe S.p.A. reserves the right to change the content without prior notice.

THREADED/FLANGED CIRCULATORS

Ego B - *Ego* B easy - *Ego* B slim

PERFORMANCE CURVES - *Ego* B flanged

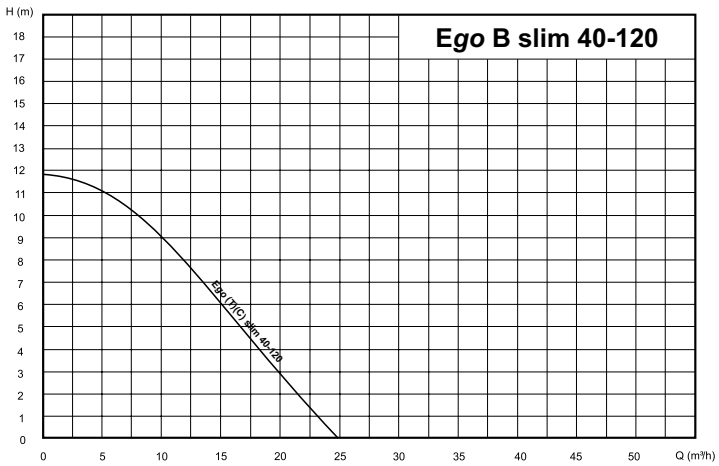

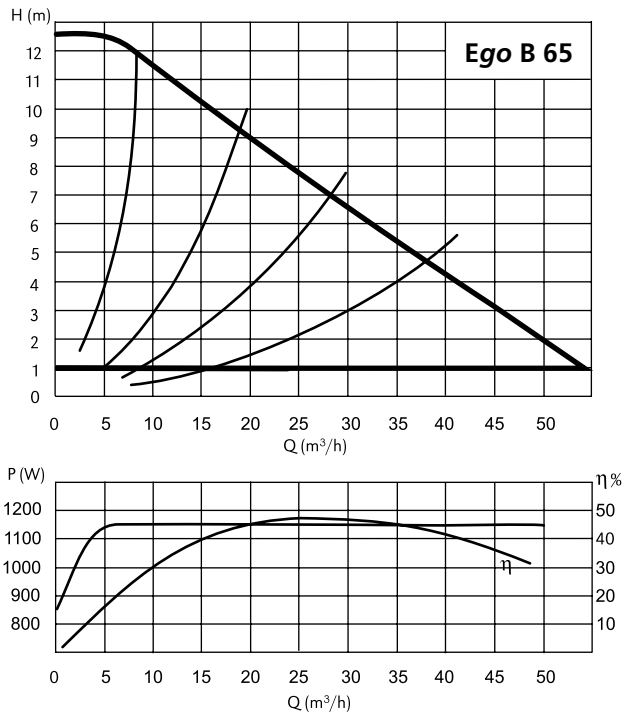

The content of this publication should not be considered mandatory, EBARA Pumps Europe S.p.A. reserves the right to change the content without prior notice.

Ego B

THREADED/FLANGED CIRCULATORS

Ego B - *Ego* B easy - *Ego* B slim

SECTIONAL VIEW - *Ego* B threaded

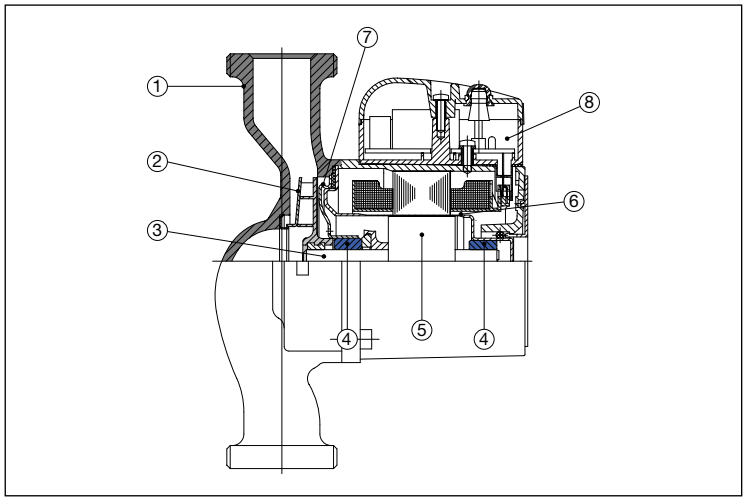

TABLE OF MATERIALS

Ref.	Part	Material
1	Pump body	Bronze
2	Impeller	Technopolymer
3	Shaft	Ceramic
4	Bearings	Ceramic
5	Rotor	Coated in stainless steel
6	Rotor can	AISI 316 Stainless Steel
7	Bearing plate	AISI 316 Stainless Steel
8	Electronic board	-

SECTIONAL VIEW - *Ego* B easy

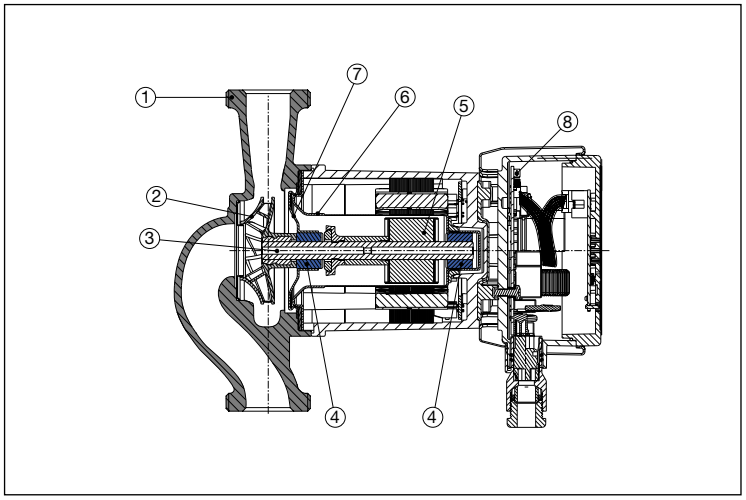

TABLE OF MATERIALS

Ref.	Part	Material
1	Pump body	Bronze
2	Impeller	Technopolymer
3	Shaft	Stainless steel
4	Bearings	Graphite
5	Rotor	Coated in stainless steel
6	Rotor can	AISI 316 Stainless Steel
7	Bearing plate	AISI 316 Stainless Steel
8	Electronic board	-

SECTIONAL VIEW - *Ego* B slim

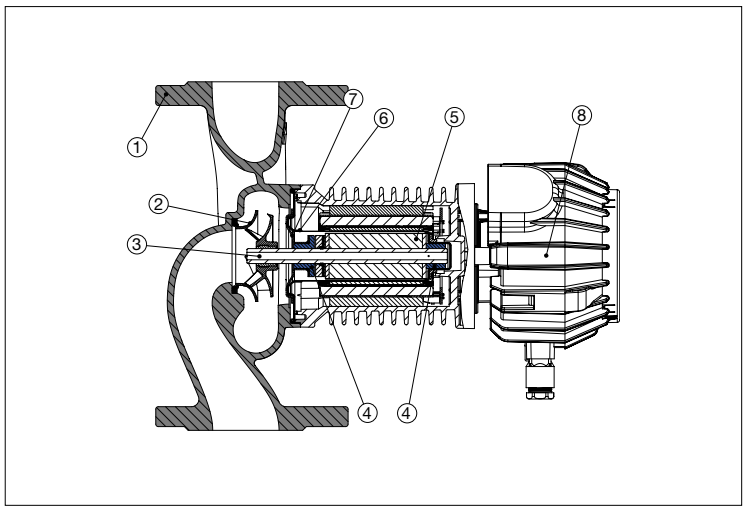

TABLE OF MATERIALS

Ref.	Part	Material
1	Pump body	Bronze
2	Impeller	Technopolymer
3	Shaft	Stainless steel
4	Bearings	Graphite
5	Rotor	Coated in stainless steel
6	Rotor can	AISI 316 Stainless Steel
7	Bearing plate	AISI 316 Stainless Steel
8	Electronic board	-

SECTIONAL VIEW - *Ego* B flanged

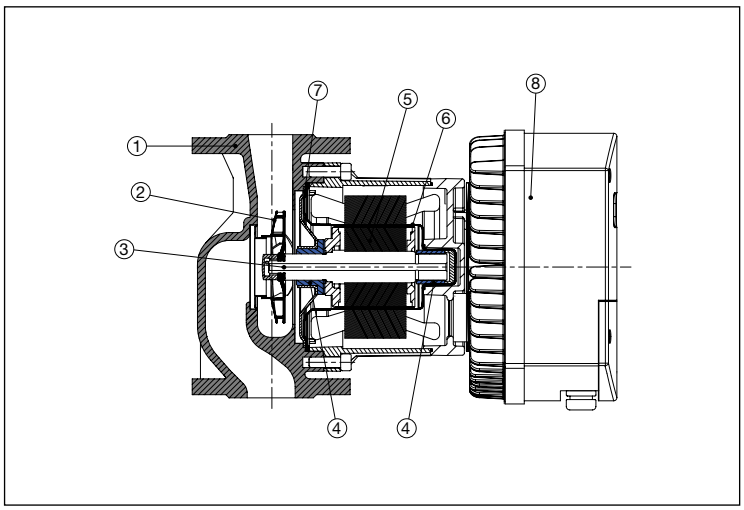

TABLE OF MATERIALS

Ref.	Part	Material
1	Pump body	Bronze
2	Impeller	Stainless steel
3	Shaft	Stainless steel
4	Bearings	Graphite
5	Rotor	Coated in stainless steel
6	Rotor can	AISI 316 Stainless Steel
7	Bearing plate	AISI 316 Stainless Steel
8	Electronic board	-

The content of this publication should not be considered mandatory. EBARA Pumps Europe S.p.A. reserves the right to change the content without prior notice.

Ego B

THREADED/FLANGED CIRCULATORS

Ego B - *Ego* B easy - *Ego* B slim

TECHNICAL FEATURES - *Ego* B threaded

Model	Pipe connection	Inlet fitting	Power P_1 [W] P_{max}	Current consumption [A] I_{min} - I_{max}	Weight [kg]
Ego 25/40-130	G1½	Rp 1”	25	0,05 ÷ 0,2	2,1
Ego 25/60-130	G1½	Rp 1”	50	0,05 ÷ 0,4	2,1
Ego 25/80-130	G1½	Rp 1”	75	0,05 ÷ 0,6	2,1

TECHNICAL FEATURES - *Ego* B easy

Model	Pipe connection	Inlet fitting	Power P_1 [W] P_{max}	Current consumption [A] I_{min} - I_{max}	Weight [kg]
Ego easy 25-80	G1”½	Rp 1”	140	0,1 ÷ 1,15	4,0
Ego easy 32-80	G2”	Rp 1”¼	140	0,1 ÷ 1,15	4,1
Ego easy 25-100	G1”½	Rp 1”	180	0,1 ÷ 1,5	4,0
Ego easy 32-100	G2”	Rp 1”¼	180	0,1 ÷ 1,5	4,1

TECHNICAL FEATURES - *Ego* B flangiaed/*Ego* B *slim*

Model	Pipe connection	Power P_1 [W] P_{max}	Current consumption [A] I_{min} - I_{max}	Weight [kg]
Ego B slim 40-120	DN40	480	2,3	12,5
Ego B slim 50-120	DN50	1100	4,8	16,0
Ego B 65	DN65	1100	4,8	36,0

The content of this publication should not be considered mandatory. EBARA Pumps Europe S.p.A. reserves the right to change the content without prior notice.

Ego B

THREADED/FLANGED CIRCULATORS

Ego B - *Ego* B easy - *Ego* B slim

DIMENSIONS - *Ego* B threaded

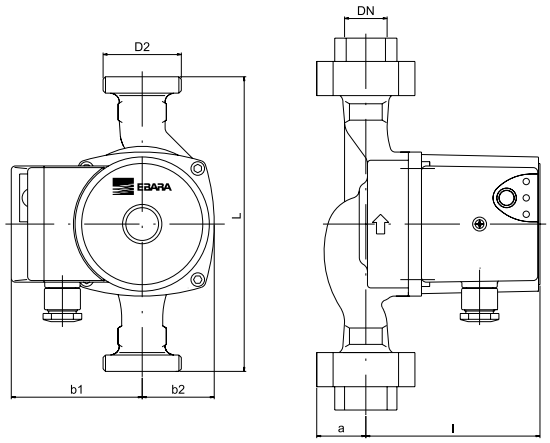

TABLE OF DIMENSIONS - *Ego* B threaded

Model	Dimensions [mm]						
	L	DN	b1	b2	l	a	D2
Ego B 25/40-130	130	25	80	48	108	32	1"½
Ego B 25/60-130	130	25	80	48	108	32	1"½
Ego B 25/80-130	130	25	80	48	108	32	1"½

DIMENSIONS - Ego B easy

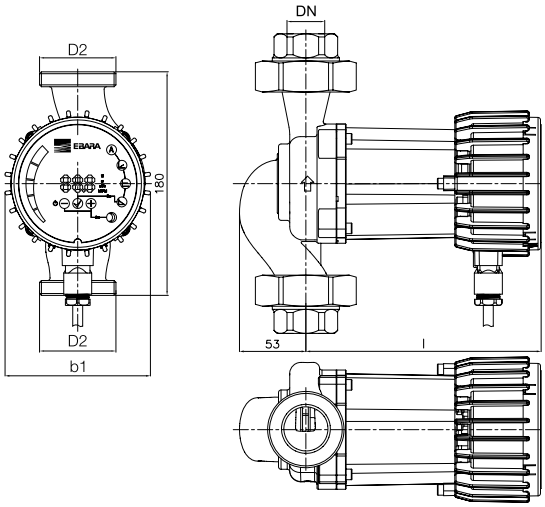

TABLE OF DIMENSIONS - *Ego* B easy

Model	Dimensions [mm]										
	h	DN	b1	l	a	D1	D2	D3	D4	D5	n. of holes
Ego easy 25-80	180	25	117	190 (222)*	-	-	1"½	-	-	-	-
Ego easy 32-80	180	32	117	190 (222)*	-	-	2"	-	-	-	-
Ego easy 25-100	180	25	117	190 (222)*	-	-	1"½	-	-	-	-
Ego easy 32-100	180	32	117	190 (222)*	-	-	2"	-	-	-	-

** Dimensions in bracket are referred to Ego slim with communication module*

The content of this publication should not be considered mandatory. EBARA Pumps Europe S.p.A. reserves the right to change the content without prior notice.

DIMENSIONS - *Ego* B slim/*Ego* B flanged

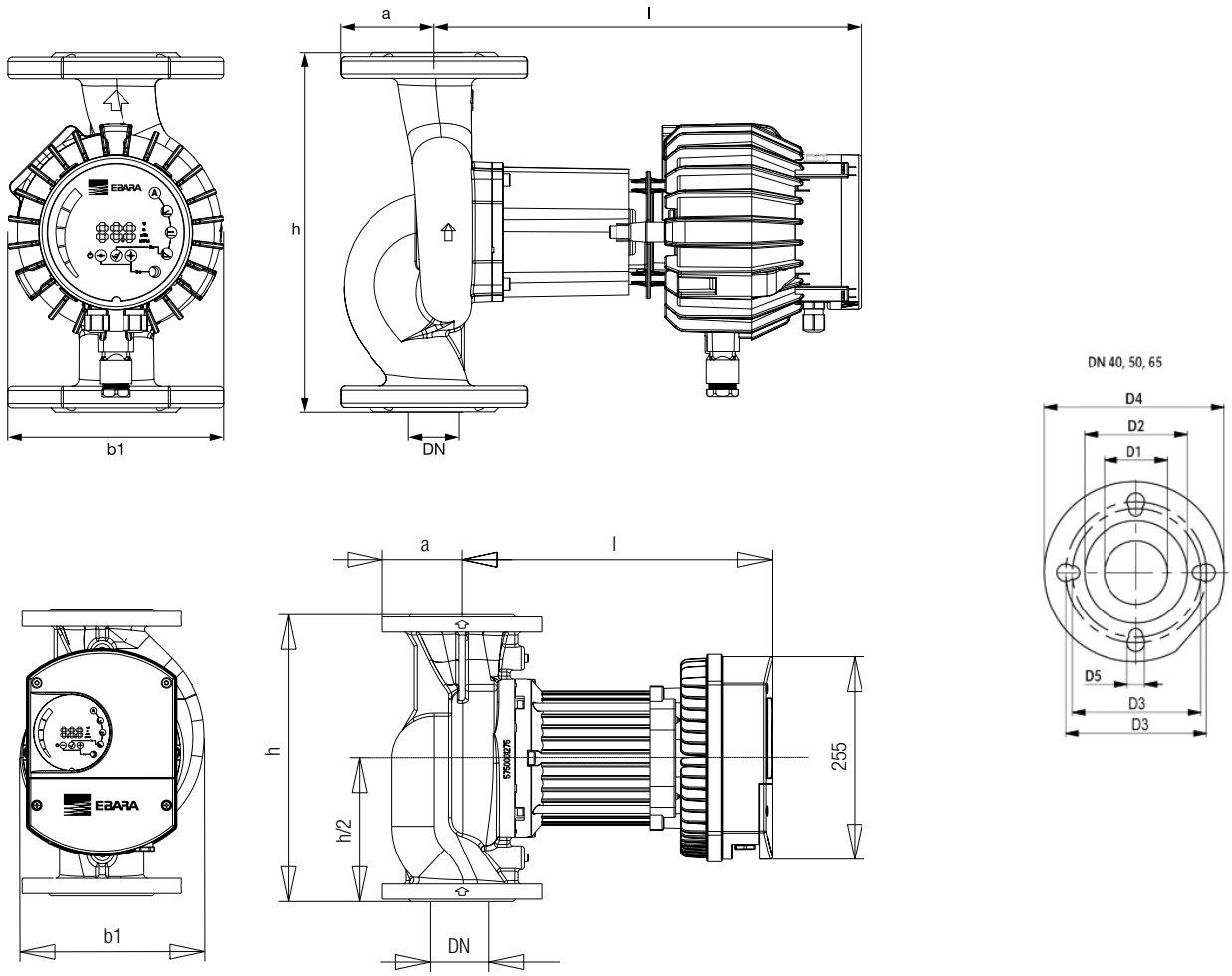

TABLE OF DIMENSIONS - *Ego* B slim/*Ego* B flanged

Model	Dimensions [mm]										
	DN	b1	l	h	a	D1	D2	D3	D4	D5	n. of holes
Ego slim 40-120	40	150	265	250	65	40	90	110/110	150	14/19	4
Ego slim 50-120	50	167	301	280	72	50	98	110/125	165	14/19	4
Ego B 65	65	222	369	340	80	65	110	130/145	185	14/19	4

The content of this publication should not be considered mandatory, EBARA Pumps Europe S.p.A. reserves the right to change the content without prior notice.

EBARA

Japanese Technology since 1912

EBARA

EBARA Pumps Europe S.p.A.

EBARA Pumps Europe S.p.A. reserves the right to make modifications without prior notice: all specifications could be subject to change

REV. 0 11/18