NMTD MAX II 65/120 F340

979528019

NMTD MAX II / Electronically regulated double circulation pumps

GENERAL

Product number	**979528019**		
Product name	**NMTD MAX II 65/120 F340**		
Seal type		Energy efficiency index	**0.2**
Net weight	**35.45 kg**		
Head max. (H max)	**11.91 m**	H min	**0.0 m**
Flow max. (Q max)	**50.2 m3/h**	Q min	**0.0 m3/h**
	%		
Noise	**≤43 dB(A)**		

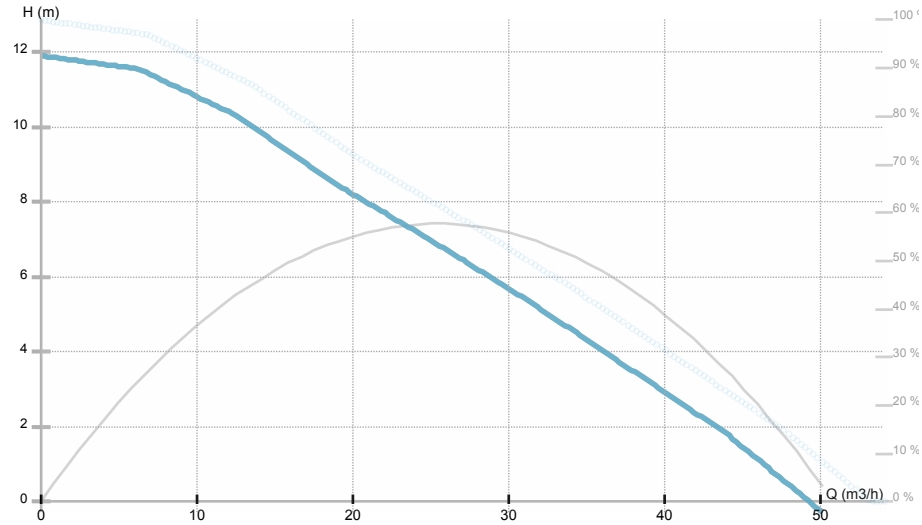

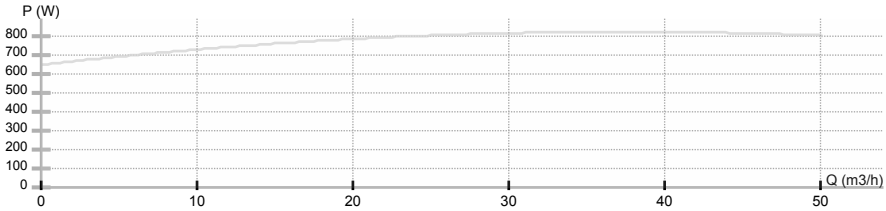

ELECTRICAL DATA

Supply voltage	**1~230 V**
Mains frequency	**50/60 Hz**
Power input max.	**810 W**
Speed max.	**3900 rpm**
Insulation class	**H (180 °C**
Current max.	**3.5 A**
Protection class	**IP44**
Thermal protection	**NTC**
Frame size	
Motor IE class	

INSTALLATION

Pumped liquid	**water VDI 2035, glycol 40%**
Liquid temperature	**-10.0 ÷ 110.0 °C**
Ambient temp.range	**40 °C**
Port-to-port length	**340 mm**
Pipe connection	**65**
Pressure rating	**PN 6/10**
Connection	**PN 6/10**
Max operating pressure	**1.0 MPa**

MATERIAL

Bearing	**all carbon**
Impeller	**PES GF 30**
Hydraulics	**gray cast iron**
Shaft	**AISI 420**

NMTD MAX II 65/120 F340

979528019

NMTD MAX II / Electronically regulated double circulation pumps

NMTD MAX II 65/120 F340

979528019

NMTD MAX II / Electronically regulated double circulation pumps

Dimension drawing

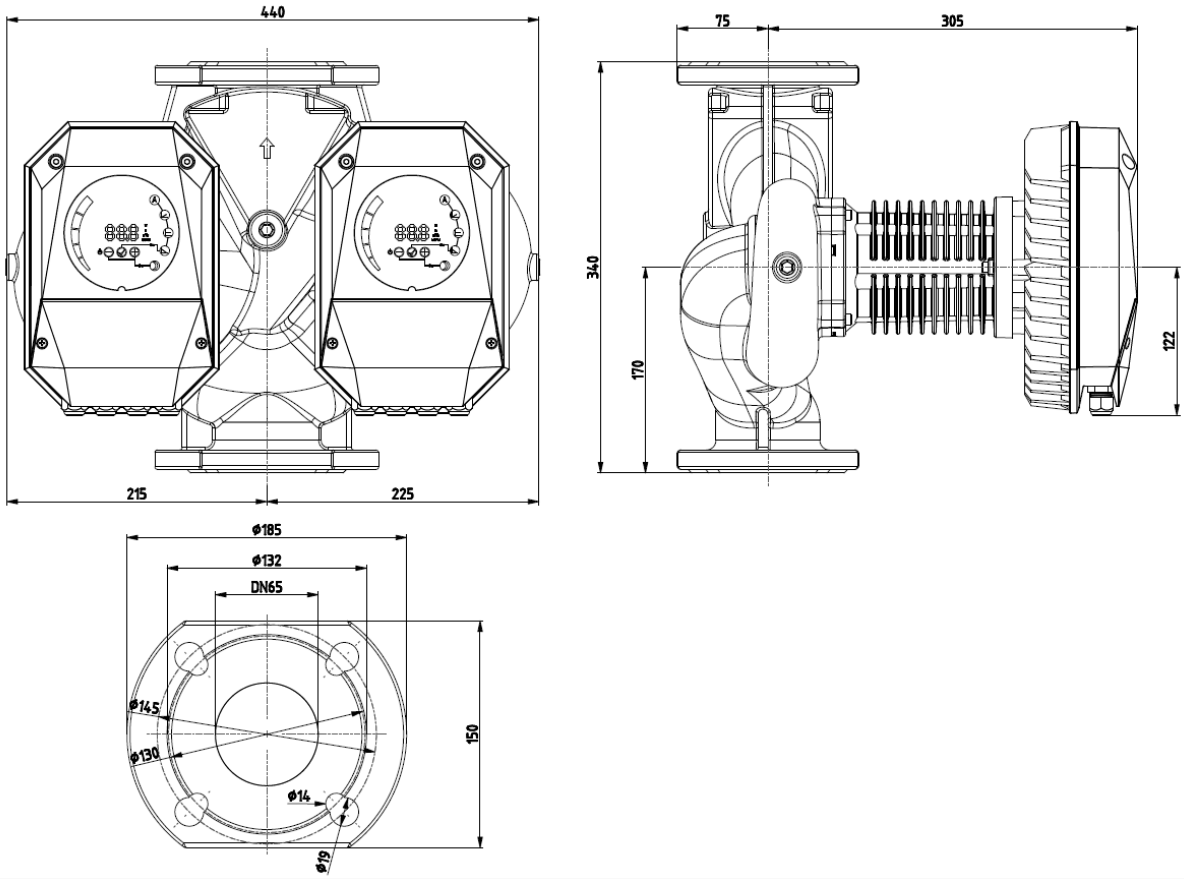

NMTD MAX II 65/120 F340

979528019

NMTD MAX II / Electronically regulated double circulation pumps

Electrical wiring

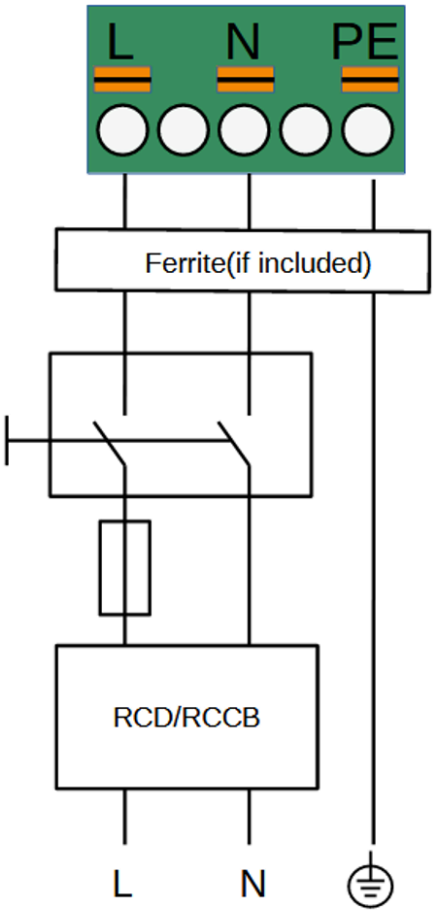

NMTD MAX II 65/120 F340

979528019

NMTD MAX II / Electronically regulated double circulation pumps

NMTD MAX II 65/120 F340 is a highly efficient (Energy-Efficiency-Index EEI≤0,20 circulation pump designed for heating, ventilation and air condition systems.
The pump includes a permanent magnet synchronous motor, the impeller speed is controlled by a built-in frequency converter.
The pump is made with two pumping units located in one housing. Pumping units are controlled in the following modes:
- manual switching in the event of a malfunction of one of the pumping units or alternate connection of pumping units at certain intervals
- parallel operation with the ability to turn on a second pumping unit at peak load.
The pump is equipped as standard with the U module, which enables the following functions:
- remote activation and deactivation of the pump
- feedback on pump status
- pump control via analog signal 0-10V.
The communication capabilities of the pump can be expanded by installing a C-module.
The pump is controlled using three buttons on the digital screen, with which you can set:
- operating mode
- values of flow rate (m3/hour), power consumption (watt), pressure (m), rotation speed (rpm)
- error messages
The pump is equipped with a built-in temperature sensor. The electronics unit has a built-in thermal overload protection sensor. The bearings are lubricated by the pumped liquid.
The pump is equipped with a dry-running protection system - the rotation of the impeller slows down to a minimum in the absence of a working medium.
The pump incorporates an unlocking system - the control system allows the high torque pump motor to be restarted multiple times when the impeller is locked.
The following pump operating modes are available:
- automatic mode - the pump control system finds the optimal operating point, this mode is used in most systems
- proportional pressure mode - recommended for radiator heating
- operating mode with constant pressure - recommended for floor heating.
- operating mode with a fixed speed (when this mode is turned on, the pump starts working at maximum speed, then the speed is adjusted manually) - recommended for heating and ventilation systems.
- night mode (works in parallel with other settings) – when the temperature in the system drops, the pump reduces the speed to a minimum.
For normal operation of the pump, it is necessary to use a working medium consisting of clean water or a mixture of clean water and glicol in accordance with current water quality standards for heating systems, for example the German standard VDI 2035. If the glycol content in the working medium exceeds 20%, it is recommended to check the pump parameters Temperature range at an ambient temperature of +25 °C: +2. ..+110 °C, at ambient temperature +40 °C: +2...+95 °C.
Operating point:
• Flow: 0 m3/h
• Head: 0 m
Pressure and flow tolerances according to ISO 9906-2015.
Electrical data:
• Voltage: 1~230 V
• Maximum current: 3.5 A
Installation data:
• DN: 65

• Installation length: 340 mm
• Net weight: 35.45 kg

The pump is available with flanged (PN6/10) connection. The hydraulic pump housing is made of gray cast iron, protected by a cataphoresis coating, which makes the pump more resistant to the environment. The rotor can is made of one piece without welding, the rotor cladding is made of AISI 316 stainless steel, the pump shaft is made of AISI 316 stainless steel. The impeller is made of synthetic material reinforced with glass fiber PES GF30. The bearings are made of graphite.
Removable thermal insulation of the pump housing is included in the delivery package.