Phone Fax	**NOC 50/9 EM** System: Standard pump	NATIVE

Customer		Project	
Customer no.		Project no.	
Contact		Position no.	
Care of		Location	
		Date	05.09.2024

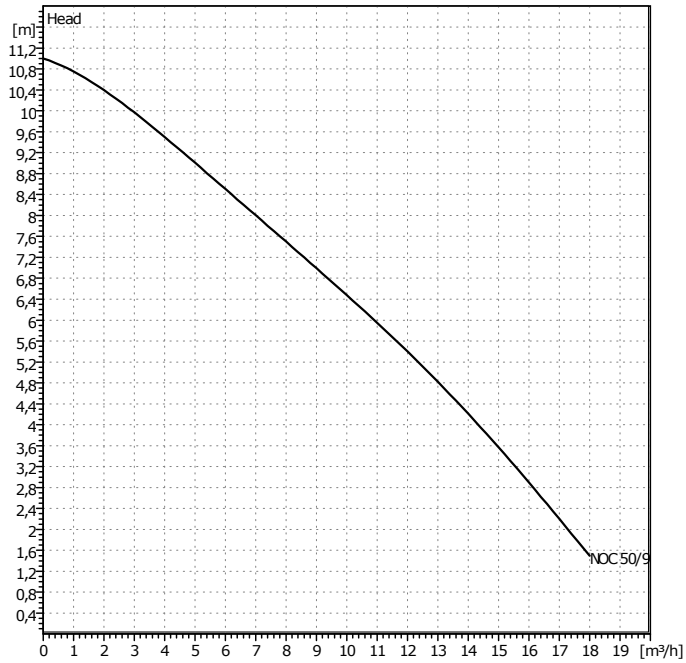

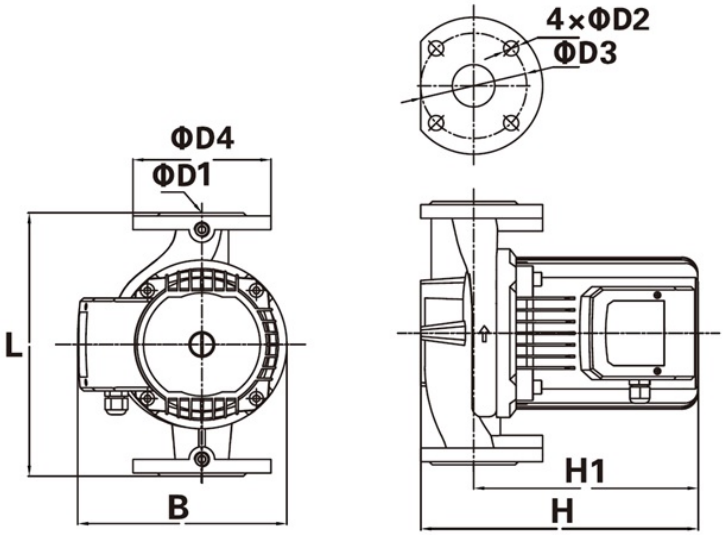

Requested data

Flow	0	m³/h
Head	0	m
Fluid	Water, pure	
Fluid temperature	20	°C
Density	0,9983	kg/dm³
Kinematic viscosity	1,005	mm²/s
Vapor pressure	0,02337	bar

Pump data

Type	NOC 50/9 EM	
Pumpe type	Single head pump	
Operating type	1	
Pressure rating	PN10	
Min. fluid temperature	2	°C
Max. fluid temperature	110	°C

Hydraulic data (duty point)

Flow	m³/h
Head	m

Minimum suction head

Temperature						°C
Minimum suction head						m

Materials / Shaft seal

Housing	Cast iron
Shaft	2Cr13
Impeller	PP
Bearing	Silicon Carbide

Dimensions per pump mm

L	280	D2	19				
B	196	D3	110				
H	290	D4	165				
H1	220						
D1	50						

Suction side	DN 50	/ PN10
Discharge side	DN 50	/ PN10
Weight	19	kg

Motordata per Motor/Pump/

Energy efficiency class	-	
Rated power P2	0,4	kW
Power input P1	0,701	kW
Nominal speed	2850	1/min
Rated voltage	1~220 V,50 Hz	
Max. current	3,4	A
Degree of protection	IP 44	
Permitted voltage tolerance +/- 10%		

Item no. of standard version 2786744